TN775
.R55

New York
State College of Agriculture
At Cornell University
Ithaca, N. Y.

Library

Cornell University Library
TN 775.R55 1896
Aluminium; its history, occurrence, prope
3 1924 003 633 751
mann

Cornell University Library

The original of this book is in
the Cornell University Library.

There are no known copyright restrictions in
the United States on the use of the text.

http://www.archive.org/details/cu31924003633751

ALUMINIUM.

ALUMINIUM:

ITS HISTORY, OCCURRENCE, PROPERTIES, METALLURGY AND APPLICATIONS, INCLUDING ITS ALLOYS.

BY

JOSEPH W. RICHARDS, A. C., PH. D.,

INSTRUCTOR IN METALLURGY AT THE LEHIGH UNIVERSITY.

THIRD EDITION,

REVISED AND ENLARGED.

ILLUSTRATED BY

FORTY-FOUR ENGRAVINGS AND TWO DIAGRAMS.

PHILADELPHIA:
HENRY CAREY BAIRD & CO.,
INDUSTRIAL PUBLISHERS, BOOKSELLERS, AND IMPORTERS,
No. 810 WALNUT STREET.
LONDON:
SAMPSON LOW, MARSTON & CO., LIMITED,
ST. DUNSTAN'S HOUSE, FETTER LANE, FLEET STREET.
1896.

@
TN775
R55
1896
@ 13888

COPYRIGHT BY
JOSEPH W. RICHARDS,
1895.

PRINTED BY THE
WICKERSHAM PRINTING CO.,
53 and 55 N. Queen Street,
LANCASTER, PA., U. S. A.

Dedication.

TO THE MEMORY OF

Frederick Wöhler

OF

GÖTTINGEN,

THE DISCOVERER OF ALUMINIUM,

AND OF

Henri Sainte-Claire Deville

OF

PARIS,

FOUNDER OF THE ALUMINIUM INDUSTRY.

THE FRUITS OF WHOSE LABORS
HAVE ENRICHED SCIENCE AND BENEFITED MANKIND.

PREFACE TO THE THIRD EDITION.

TEN years ago aluminium was an almost unknown metal; then it sold for twelve dollars a pound, now it is bought for fifty cents; then the yearly production was less than is the present daily output; then only three books had been written about it, since then seven have appeared and two journals have been established to represent it. The lowering of the price, the increased production, the wide circulation of reliable information about aluminium, have brought to pass the dream of Deville, for it has truly become a metal of every-day life.

The abundance of aluminium in nature, the purity of its ores, its wonderful lightness and adaptability to numerous purposes, indicate that the goal of the aluminium industry will be reached only when this metal ranks next to iron in its usefulness to mankind.

To assist this consummation by furnishing *all* the reliable information about aluminium, to thus enlighten the general reader, help the workman, instruct the student, assist the experimenter, and in every way to speed the industry on its destined path, is the *raison d'être* of this work.

The writer thanks the public for its generous appreciation of his past endeavors. The volume has been revised to date, several chapters have been largely re-written, and every effort has been made to make the work worthy of the splendid industry which it represents.

JOSEPH WILLIAM RICHARDS.

THE LEHIGH UNIVERSITY,
Bethlehem, Pa., October 25, 1895.

PREFACE TO THE SECOND EDITION.

If it was true that no apology was necessary in presenting a work on Aluminium in English, as stated in the preface to the first edition of this book, it is equally true that still less apology is necessary in offering an improvement on that work.

The present volume is designed to be an improvement on the former one in the following respects: Mistakes have been corrected wherever detected by the author or pointed out by his friends; in some instances the order of treatment of different parts has been revised, so as to bring them into strict, logical sequence; the more strictly historical processes are described in greater detail, in order to preserve a complete record of the rise of the aluminium industry; chapters have been added treating on the properties and the preparation of aluminium compounds, on the theoretical aspect of the reduction of aluminium compounds, and on the analysis of commercial aluminium and its common alloys; the original chapters have been in several cases sub-divided, and every part treated more by itself and in greater detail than before; finally, additions have been made throughout recording and describing the progress achieved in the last three years, with a completeness which it is hoped is up to the standard of the rest of the book.

The method of treatment in the present edition will be found to be more critical, for wherever a reasonable doubt might be expressed as to the correctness of certain claims, or a rational explanation advanced for certain phenomena, the author has not

hesitated to put his best thought on the question and to state his conclusions unreservedly.

The friendly criticisms of the scientific press and their suggestions have been kept in view in preparing this new edition. The spelling "aluminium" has been retained, because no sufficient reasons have been advanced for changing it to "aluminum;" and even if each way was equally old and as well-sanctioned by usage and analogy as the other, the author's choice would be the longer spelling, as being more euphonious and agreeable to the ear.

It has been the author's endeavor to make this volume as complete as possible, as accurate as possible, to write it in a manner which will be entertaining to the general reader, and to furnish a treatise which will be of practical value to the practical metallurgist, as well as of scientific merit where it touches on matters of theory.

J. W. R.

BETHLEHEM, PA., *March 12, 1890.*

PREFACE TO THE FIRST EDITION.

No apology is necessary in presenting a work on Aluminium in English. In 1858 Tissier Bros. published in France a small book on the subject. H. St. Claire Deville, the originator of the aluminium industry, published a treatise, also in French, in 1859. Deville's book is still the standard on the subject. Until December, 1885, we have an intermission, and then a work by Dr. Mierzinski, forming one of Hartleben's Chemisch-Technische Bibliothek, which is a fair presentation of the industry up to about 1883, this being a German contribution. Probably because the English-speaking people have taken comparatively little hand in this subject, we find no systematic treatise on aluminium in our language. The present work aims to present the subject in its entirety to the English reader.

Tissier, Deville, Mierzinski, and the German, French, and English scientific periodicals have been freely consulted and extracted from, full credit being given in each case to the author or journal. As this art has of late advanced so rapidly, it has been a special aim to give everything that has been printed up to the time of publication.

The different parts of the work are arranged in what seemed their logical order, corresponding closely to that followed by Deville. The Appendix contains an account of laboratory experiments, etc., several of which, it is trusted, may be of value.

In conclusion, the author wishes to thank the Faculty of his "Alma Mater," Lehigh University, for their permission to use

his Thesis on Aluminium as the basis of this treatise; also, to acknowledge his indebtedness to Dr. Wm. H. Greene, of Philadelphia, for assistance rendered in the preparation of the work for the press.

J. W. R.

PHILADELPHIA, *November 25, 1886.*

ABBREVIATIONS USED IN MAKING REFERENCES.

SEPARATE WORKS ON ALUMINIUM

(*Arranged chronologically.*)

Tissier . . . . . Recherche de l'Aluminium. C. & H. Tissier. Paris: J. Hetzel et Cie. 1858.

Uhlenhuth . . . . . Die Darstellung des Aluminiums. Ed. Uhlenhuth. Quedlinburg: G. Basse. 1858.

Deville . . . . . De l'Aluminium. H. St. Claire Deville. Paris: Mallet-Bachelier. 1859.

Mierzinski . . . . . Die Fabrikation des Aluminiums. Dr. Stanislaus Mierzinski. Vienna: Hartleben's Chemisch-technische Bibliothek. 1885.

Richards (1st Ed.) . . . . . Aluminium. Joseph W. Richards. Philadelphia: Henry Carey Baird & Co. 1887.

Richards (2nd Ed.) . . . . . Aluminium. Joseph W. Richards. Philadelphia: Henry Carey Baird & Co. 1890.

Le Verrier . . . . . Note sur la Metallurgie de l'Aluminium. U. Le Verrier. Paris: Baudry et Cie. 1891.

Minet . . . . . L'Aluminium. Adolphe Minet. Paris: Bernard Tignol. 1892.

Lejeal . . . . . L'Aluminium. Adolphe Lejeal. Paris: J. B. Baillière et Fils. 1894.

TREATISES IN ENCYCLOPÆDIAS.

Fremy . . . . . Enclyclopédie Chimique. Fremy. Paris: Ch. Dunod.
Art: L'Aluminium par Margottet (1883).
Art: L'Aluminium et ses Alliages par Wickersheimer (1890).

Kerl and Stohman . . . . . Enclyclopädisches Handbuch der Technischen Chemie. 4th Ed. Brunswick: Vieweg und Sohn. 1886.
Art: Aluminium von R. Biederman.

Watts . . . . . Watts' Dictionary of Chemistry.

JOURNALS AND PERIODICALS.

Ann. de Chim. et de Phys.	Annales de Chimie et de Physique.
Ann. der Chem. und Pharm. Liebig's Ann.	Liebig's Annalen der Chemie und Pharmacie.
Bull. de la Soc. Chim.	Bulletin de la Société Chimique de Paris.
Chem. News	The Chemical News.
Chem. Zeit.	Chemiker Zeitung (Cöthen).
Compt. Rend.	Comptes Rendus de les Séances de l'Académie. Paris.
Dingl. Jrnl.	Dingler's Polytechnisches Journal.
E. and M. J.	The Engineering and Mining Journal.
Jahresb. der Chem.	Jahresbericht ueber die Fortschritte der Chemie.
Jrnl. Chem. Soc.	Journal of the Chemical Society.
Jrnl. der Pharm.	Journal der Pharmacie.
Jrnl. für pr. Chem.	Erdmann's Journal für praktische Chemie.
Mon. Scientif.	Le Moniteur Scientifique. Dr. Quesnesville.
Phil. Mag.	The London and Edinburgh Philosophical Magazine.
Phil. Trans.	Transactions of the Royal Philosophical Society.
Pogg. Ann.	Poggendorff's Annalen.
Poly. Centr. Blatt.	Polytechnisches Central-Blatt.
Proc. Ac. Nat. Sci.	Proceedings of the Academy of Natural Sciences (Philadelphia).
Quarterly Journal	Quarterly Journal of the Society of Arts.
Rpt. Brit. A. A. S.	Report of the British Association for the Advancement of Science.
Sci. Am. (Suppl.)	Scientific American (Supplement).
Wagner's Jahresb.	Wagner's Jahresbericht der Chemischen Technologie.
Zeit. für anal. Chem.	Zeitschrift für Analytische Chemie.

JOURNALS REPRESENTING THE ALUMINIUM INDUSTRY.

The Aluminum World	New York. Published monthly. Established September, 1894.
L'Aluminium	Paris. Published monthly. Established January, 1895.

CONTENTS.

CHAPTER I.

History of Aluminium.

PAGE

The *alumen* of Pliny; Alumen Roccæ or rock alum; Alums and vitriols confounded 1

Paracelsus distinguishes alums from vitriols; Views of Ettmüller, Stahl, Hoffman, Geoffroy, Hellot and Pott, on the nature of the base of alum; Marggraff's dissertations on alum and its earth; Morveau fixes the nomenclature of alumina 2

The search for aluminium; Macquer's supposition; Baron's attempts to reduce alumina; Lavoisier's views on the nature of alumina . . 3

Ruprecht and Tondi's experiments; Criticisms of Savaresi, Klaproth and Karsten; Dr. Hare melts alumina without noticing any reduction; Sir Humphry Davy attacks the earths with his great battery . . 4

Davy's experiments on reducing alumina; He reduces it in the electric arc in presence of iron; He suggests a name for the metal . . . 5

Prof. Benjamin Silliman's experiment with Dr. Hare's blow-pipe; Oersted's attempt to reduce aluminium chloride; Berzelius' attempt to reduce cryolite 6

Professor Frederick Wöhler, of Göttingen, isolates aluminium as a metallic powder, in 1827 7

Wöhler obtains the metal in globules, in 1845; Professor Henri Saint-Claire Deville obtains aluminium *en masse*, in 1854 8

Deville's first attempts; His paper read before the French Academy on February 6, 1854 9

The Academy aids Deville in his further work; A reclamation by Chenot; Further experiments at the Ecôle Normale; Reduction of aluminium chloride by the battery 10

Deville's experiments in manufacturing sodium; Installation of the sodium process at Rousseau Bros. chemical works at La Glacière; Deville and Bunsen publish their electrolytic methods; The Emperor Napoleon III. becomes interested and defrays the expense of further experiments 11

PAGE

The Tissier Bros. experiment on producing sodium; Deville's work at Javel; The industry on a firm basis 12
Exhibit of aluminium at the Paris Exposition, 1855; Misunderstanding between Deville and the Tissier Bros. 13
Tissier Bros. start an aluminium works near Rouen; History of this enterprise 14
Deville and his friends put up a large plant at La Glacière; Removal to Nanterre; Removal to Pechiney and Co.'s works at Salindres; Tissier Bros. publish their "Recherches sur l'Aluminium" (1858) . . 15
Deville publishes his "De l'Aluminium" (1859); His conclusions as to the usefulness of aluminium 16
Experiments of Dr. Percy and H. Rose on reducing cryolite; Manufacture of aluminium by A. Monnier, of Camden, N. J.; Calculation of cost of the new metal by W. J. Taylor 17
The first aluminium works in England, at Battersea (1858); Bell Bros. works near Newcastle-on-Tyne; Project to start works at Berlin; Dr. Clemens Winckler's retrospect, 1879 18
Condition of the aluminium industry in 1879 19
The industry from 1879 to 1882; W. Weldon's views on its prospects in 1883 20
The search for a substitute for sodium; Webster's improvements in the industry 21
H. Y. Castner's invention for producing sodium; His experiments in New York 22
Castner's demonstration in England; Unites with Webster to form the "Aluminium Company, Limited;" Large works at Oldbury near Birmingham, stop making aluminium in 1891 23
Revival of electric methods, using dynamos instead of the battery; Grätzel's process 24
Kleiner's process; Hall's process, invented in 1886, essentially different in principle from previous attempts 25
Incorporation of the Pittsburgh Reduction Co. to work Hall's process; Works at Kensington, Pa., and Niagara Falls; Minet's experiments at Creil and works at Saint Michel, Savoy 26
The electric-furnace methods; Siemens furnace; Grabau's experiments; Mierzinski's remarks 27
Cowles Bros. process, 1885; Plant at Lockport, N. Y., and works in England; The principle of the process 28
Hèroult's processes; Principle of his alloy process 29
The "Aluminium Industrie Actien Gesellschaft" formed to work Hèroult's processes; Dr. Kiliani, manager of their works at the Falls of the Rhine; The Hèroult process in France 30
Experiments with Hèroult's process in the United States; The "Alliance Aluminium Co., of London," formed to work Netto's sodium process. 31
Failure of the Alliance Aluminium Co.; Grabau's improvements in pro-

PAGE

ducing sodium and aluminium fluoride; Colonel Frishmuth's works in Philadelphia 32
Exhibit of aluminium at the Paris Exposition, 1889; Progress of the industry since 1890 33
The Cowles Electric Smelting Co. sued for infringement of the Hall process; Exhibits of aluminium at the Columbian Exposition in Chicago, 1893; The production of aluminium one of the great achievements of the century 34
Statistics; The decline in the price of aluminium and aluminium bronze. 35
Production of aluminium in France from 1854 to 1892; Production in England; In Switzerland 36
Production of the United States from 1883 to 1894; Total aluminium produced in the world to the end of 1892; World's production in 1893; An estimate of the production in 1894 37
The probable production in 1895 38

CHAPTER II.

Occurrence of Aluminium in Nature.

Clarke's estimate of the proportion of aluminium in the earth's crust; Not found metallic; Most frequent combinations in rocks, soils and clays; Occurrence in some plants; Ricciardi's experiments on the assimilation of alumina by plants 39
Composition of the most frequent aluminium minerals; Bauxite the most useful mineral for the aluminium industry 40
Localities in which bauxite occurs; Deposits worked in the United States; Value per ton 41
Analyses of foreign bauxites 42
Analyses of American bauxites 43
Laur's generalizations concerning French bauxites 44
Hunt's generalizations on American bauxites; The occurrence of cryolite in Greenland 45
Composition of cryolite; Amount imported into the United States; Description of a small deposit in Colorado 46
Analysis of the Colorado cryolite; The sources of corundum . . 47
Mining of corundum in the United States; The composition and properties of kaolin 48
Localities of the large kaolin beds; Value of kaolin as an aluminium ore; Common clays 49
Native sulphate of alumina; Deposits in New Mexico, Colorado and Ohio 50
Economic value of the aluminium sulphate deposits 51

CHAPTER III.

Physical Properties of Aluminium.

PAGE

Commercial aluminium not chemically pure; The most frequent impurities 52
The influence of small amounts of impurities on the physical properties of the metal 53
Analyses of commercial aluminium; Notes on the analyses . . . 54
Recent analyses of present commercial metal 55
Difference in the composition of metal made by the sodium and the electrolytic methods; The different conditions in which silicon exists in aluminium; Rammelsberg's analyses 56
Absorption of gases by molten aluminium; Dumas' analyses; Author's observations; Le Verrier's detection of carbon in commercial aluminium 57
Influence of carbon on the physical properties of aluminium; Le Verrier detects nitrogen in commercial aluminium 58
Influence of nitrogen on the physical properties of aluminium; The color of pure and impure aluminium 59
Tarnishing of aluminium in the air; Fracture of purest aluminium . 60
Fracture of impure aluminium; Hardness; Testing quality with the knife; Hardening by cold working 61
Comparison of the hardness of aluminium with other metals; Specific gravity 62
Influence of impurities on the specific gravity; Increase of specific gravity by working 63
Comparison of the specific gravity of aluminium and other metals . 64
Comparative value of equal weights and equal volumes of the different metals; Fusibility 65
Melting point determined by the electric pyrometer; Influence of impurities on the melting point; Volatilization; Odor 66
Taste; Magnetism; Sonorousness 67
Sound produced by an aluminium bell, bar and tuning-fork; Aluminium sounding boards 68
Velocity of sound in aluminium; Crystalline form; Elasticity . . 69
Tensile and compressive strength 70
Table of tensile tests 71
Table of compressive tests; Transverse tests 72
General conclusions of Messrs. Hunt, Langley and Hall; Variation of tensile strength with the temperature 73
Influence of working and annealing on the mechanical properties; Tensile strength in comparison with weight 74
Comparison of the tensile strength with that of other metals, section for section and weight for weight; Malleability 75

PAGE

Thickness of aluminium leaf; Color by transmitted light; Ductility . 76
Expansion by heat; Specific heat 77
Determinations of the specific heat by Regnault, Kopp, Mallet, Tomlinson, Naccari, Le Verrier 78
Specific heat and latent heat of fusion as determined by Pionchon and the author 79
The amount of heat in molten aluminium; Agreement with Dulong and Petit's law 80
Slow melting of aluminium due to its great latent heat of fusion; Comparison with other metals; Electric conductivity 81
Professor Dewar's determinations of the electric conductivity at very low temperatures; Conductivity for heat 82

CHAPTER IV.

Chemical Properties of Aluminium.

Atomic weight; Action of air . . . . . , ... 83
Resistance to air when melted; Action of air and water together; Piqûres 84
Combustion of aluminium powder or leaf; Action of water . . . 85
Decomposition of water by aluminium leaf; Action of hydrogen sulphide and sulphur 86
Experiment of the author with hydrogen sulphide and molten aluminium 87
Action of sulphuric acid; Ditte's explanations 88
Le Roy's quantitative tests with sulphuric acid 89
Action of nitric acid; Ditte's observations 90
Experiments of Le Roy, Lunge and the author on the action of nitric acid; Use of aluminium in the Grove battery; Action of hydrochloric acid 91
Action of hydrobromic, hydriodic and hydrofluoric acids; Experiment by the author; Action of organic acids, vinegar, etc. 92
Action of the acids found in food; Deville's prediction of the usefulness of aluminium for culinary utensils; Lubbert and Roscher's experiments with thin foil 93
Balland's exhaustive tests with foods; Rupp's results; Lunge and Schmid's experiments 94
Details of Lunge and Schmid's tests 95
Conclusions from these tests; Confirmation of these results by actual experience of two years with aluminium culinary utensils . . . 96
Action of common salt, molten and in solution; Sea-water; Aluminium boats 97

PAGE
Action of organic secretions, the saliva, etc. 98
Action of caustic potash, caustic soda; Quantitative tests . . . 99
Action of ammonia; Lime water; Solutions of metallic salts . . . 100
Action of solutions of mercury, copper, silver, lead 101
Action of solutions of zinc, alkaline chlorides, aluminium salts; Action of melted fluorspar; Use as a flux 102
Use of cryolite as a flux; Action of molten silicates and borates . . 103
Action of fused nitre; Purification of impure aluminium by nitre; Reaction with alkaline sulphates and carbonates 104
Reaction of aluminium on oxides of manganese, zinc, iron, lead, copper, barium 105
Greene and Wahl's process of producing pure manganese; Action of phosphate of lime, silver chloride, mercurous chloride, carbonic oxide, hydrogen, chlorine, bromine, iodine, fluorine 106

CHAPTER V.

Properties and Preparation of Aluminium Compounds.

General considerations; Position of aluminium in the periodic classification of the elements 107
Observations on the structure of aluminium compounds . . . 108
The tri-valency of aluminium; Aluminates 109
Neutral salts of aluminium; Basic salts; General methods of formation of aluminium salts 110
General properties of aluminium salts; Chemical reactions in solution; Reactions before the blowpipe 111
Aluminium oxide; Physical and chemical properties 112
Hydrous aluminium oxides, natural and artificial; The soluble hydrate. 113
Aluminates; Potassium aluminate; Sodium aluminates; Barium aluminate 114
Aluminates of calcium, zinc, copper, magnesium, iron, beryllium; Aluminium chloride 115
Hydrous aluminium chloride; aluminium-sodium chloride . . . 116
Double chlorides of aluminium with phosphorus, sulphur, selenium, ammonium 117
Aluminium-chlor-sulphydride; Aluminium-chlor-phosphydride; Aluminium bromide; Aluminium iodide 118
Aluminium fluoride; Methods of production 119
Fluorhydrate of aluminium; Aluminium-hydrogen fluoride; Aluminium-sodium fluoride 120
Aluminium sulphide; Double sulphides with sodium and potassium . 121
Use of aluminium sulphide in the laboratory for generating hydrogen sulphide; Aluminium selenide; Aluminium borides 122

PAGE
Aluminium boro-carbides; Aluminium carbide 123
Production of aluminium carbide in the electric furnace by Le Verrier . 124
Composition and properties of aluminium carbide; Aluminium nitride 125
Aluminium sulphates, anhydrous and hydrous 126
Basic aluminium sulphates 127
Alums; Potash alum; Ammonia alum 128
Soda alum; Double sulphates of aluminium and the metals; Aluminium selenites 129
Aluminium nitrate; Aluminium antimonate; Aluminium phosphates . 130
Aluminium carbonate; Aluminium borate 131
Hydrous aluminium borates; Aluminium silicates; Blast furnace slags 132

CHAPTER VI.

Preparation of Aluminium Compounds for Reduction.

The preparation of alumina; Preparation from alums or aluminium sulphate 133
Preparation of alumina from ammonia alum 134
Method used by Deville at Javel; Tilghman's method . . . 135
Webster's process of making alumina from potash alum . . 136
Preparation of alumina from bauxite; Method used at Salindres . . 137
Heating with soda and washing out the aluminate 138
Apparatus used for washing; Precipitation of alumina by carbonic acid gas 139
Apparatus used for the precipitation; The barattes . . . 140
Washing and drying the precipitated alumina; Behnke's method of treating bauxite; Lieber's method 141
Muller's method for extracting alumina from silicates; Use of common salt to decompose bauxite; Wagner's method of treating bauxite . 142
Laur's method of using sodium sulphate to decompose bauxite; Löwig's experiments on precipitating alumina from sodium aluminate solution; Dr. Bayer's improvements 143
Preparation of alumina from cryolite; The dry way 144
Furnace for heating cryolite with chalk; Thomson's method . . 145
Conduct of the operation; Washing the fusion 146
Production of the carbonic acid gas for precipitation 147
Composition of the precipitate; Action of steam on molten cryolite; Utilization of aluminous fluoride slags 148
Utilization of the residual slags from sodium retorts by fusing with the aluminous slags; Decomposition of cryolite in the wet way . . 149
Method used by Deville at Javel; Modification of this process by Sauerwein 150
Reactions in Sauerwein's process; Weber's method of decomposing cryolite; Schuch's reaction 151

PAGE
Preparation of aluminium chloride and aluminium-sodium chloride . 152
Method used by Deville on a small scale at Javel . . . 153
Manufacture by Deville on a large scale 154
Furnace used and working of the operation . . . 155
Output of the furnace; Purification of the crude chloride . . . 156
Deville's idea of making the double chloride; Margottet's description of the apparatus used at Salindres 157
Conduct of the operation at Salindres 158
Cost of making the double chloride at Salindres . . . 159
Plant of the Aluminium Company, Limited, at Oldbury, near Birmingham, England 160
Arrangements of the furnaces and conduct of the operation . . . 161
Output of this plant; Purity of the double chloride . . 162
Castner's method of purifying the double chloride 163
Cost of the purified double chloride; Gadsden's method of producing aluminium chloride; Count R. de Montgelas' improvement . . 164
Prof. Mabery's process for producing aluminium chloride in the electric furnace; Curie's method; Warren's general process for anhydrous metallic chlorides 165
Camille A. Faure's process; Description by Berthelot . 166
Details of Faure's process; Output claimed; Dullo's method of making aluminium chloride from clay 167
Remarks on Dullo's suggestions; The preparation of aluminium fluoride and artificial cryolite 168
Berzelius' method of making artificial cryolite; Deville's methods . 169
Pieper's reactions in the wet way; Bruner, Deville and Hautefeuille on making aluminium fluoride 170
Grabau's processes; Aluminium fluoride from aluminium sulphate and fluorspar 171
Aluminium fluoride indirectly and directly from kaolin . . . 172
Precautions necessary to obtain it free from iron 173
The preparation of aluminium sulphide; Fremy's researches . . . 174
Purity of the aluminium sulphide produced 175
Reichel's results; Experiments of the author 176
Propositions of Comenge, Petitjean, etc. . . . 177
Lauterborn's patent anticipated 178

CHAPTER VII.

The Manufacture of Sodium.

Relations of the production of sodium to the aluminium industry; Isolation of sodium by Davy, Gay Lussac and Thenard, Curaudau . . 179
Brünner's apparatus; Donny and Mareska's condenser; Deville's improvements at Javel (1855) 180

PAGE
The chemical and physical properties of sodium 181
Method of reduction used at Javel; Composition of the mixtures for reduction 182
Utility of the different ingredients of the mixtures; Difficulties of condensing sodium vapor 183
Mixture used at La Glacière and Nanterre; Charging the apparatus . 184
Description of retorts and condensers; Manufacture in mercury bottles 185
The furnace used for manufacture in mercury bottles 186
Detailed description of condensers 187
Conduct of the operation 188
Handling of the condensed sodium; The temperature necessary for reduction 189
Use of decarburized, cast-iron bottles; The continuous manufacture in cylinders 190
Furnace for manufacture in cylinders 191
Arrangement of the cylinders in the furnace 192
Charging and discharging the cylinders 193
Tissier Bros.' method of procedure at Rouen 194
Furnace used by Tissier Bros. 195
Charging and discharging Tissier's furnace 196
Causes of loss of sodium; Deville's improvements at La Glacière (1857) 197
Deville's large cylinder furnace; Difficulties in its operation . . 198
Deville's attempts to use cast-iron retorts; Deville's improvements at Nanterre (1859) 199
Necessity of protecting the iron cylinders; Deville returns to smaller apparatus 200
Cost of sodium at Salindres in 1872; An experiment of Deville's in 1864; Wagner's method of preserving sodium 201
Reduction of potassium and sodium compounds together; Thompson and White's method 202
Blackmore's process of reducing carbonate of soda; Thowless' apparatus; Jarvis' device for using fire-clay apparatus; Castner's process 203
History and principle of Castner's invention 204
Reaction on which the process is based; Form of furnace used . 206
Experimental furnace erected in England 207
Conduct of the operation in this furnace 208
Yield of the furnace; Composition of the residues 210
Cost of sodium by the Castner process 211
Erection of large works to operate the Castner process 212
Description of the largest furnaces 213
Manner of working and output of these furnaces 214
Preservation of the sodium; Reactions in the process 215
Netto's sodium process; The Alliance Aluminium Company . . . 217
Details of Netto's apparatus 218

PAGE

Reduction of sodium compounds by electricity; Jablochaff's apparatus; Roger's method 219
Details of Roger's experiments 220
Grabau's observations on the electrolysis of molten sodium chloride . 222
Details of Grabau's electrolytic process; Castner's process of electrolyzing caustic soda 223

CHAPTER VIII.

The Reduction of Aluminium Compounds from the Standpoint of Thermal Chemistry.

The proper way to use the data of thermo-chemistry 226
Critical temperatures below which reactions do not occur 227
Influence of physical state in determining a reaction; The heat of formation of some aluminium compounds 228
The heat of formation of alumina compared with that of other oxides; Elements which reduce alumina easily 229
Possibilities of the reduction of alumina 230
Reduction of alumina by carbon; Necessary conditions to be fulfilled . 231
Heats of formation of chloride, bromide and iodide of aluminium, and other metals 232
Deductions as to the agents capable of reducing these aluminium salts 233
Heat of formation of aluminium fluoride and other metallic fluorides . 234
Observations on the reduction of aluminium fluoride; Heat of formation of aluminium sulphide and other metallic sulphides 235
Observations on the reduction of aluminium sulphide; Electricity as a reducing agent 236
The voltage necessary to produce decomposition of metallic fluorides, chlorides, oxides and sulphides; Tabular view of these data; Observations thereon 237
Electrolysis of baths containing several ingredients; Illustration from Hall's process 238
Illustration from Minet's process; The voltage required to decompose alumina at different temperatures 239
Calculation of the temperature at which hydrogen can begin to reduce alumina; The same calculation for carbon 240
Alumina has been reduced by carbon in an iron blast furnace; Peculiarity of acetylene gas as a reducing agent 241
Thermal aspect of other reactions used in the aluminium industry; The production of aluminium chloride from alumina 242
The production of aluminium sulphide from alumina; Peculiarity of carbon bi-sulphide from a thermal standpoint 244

CHAPTER IX.

Reduction of Aluminium Compounds by Means of Potassium or Sodium.

PAGE

Classification of methods; The reduction of chlorine compounds; Oersted's experiments (1824) 246
Wöhler's experiments (1827); Wöhler was repeating Oersted's work. 247
Wöhler isolates aluminium as a metallic powder; His experiments in 1845 248
Globules of aluminium obtained by Wöhler in 1845 . . . 249
Impurity of Wöhler's metal; Deville's experiments in 1854 . 250
Deville obtains pure aluminium in ingots 251
Deville's methods devised in his laboratory and applied at Javel (1855). 252
Details of the apparatus employed; Conduct of the operation 253
Deville's dissatisfaction with this apparatus and its results . . 255
Deville reduces aluminium chloride by sodium vapor . . . 256
Deville's perfected process as used at Nanterre (1859) . . . 257
Details of Deville's improvements . . 258
Reduction in crucibles; Lining of crucibles 259
Reduction on the bed of a reverberatory furnace 261
Deville's views on the aluminium industry in 1859 . . 263
The Deville process as operated at Salindres in 1882 . . . 264
The chemical reactions in the process 265
Description of furnace used and mode of operation . . . 266
Cost of aluminium at Salindres; Niewerth's process . . 268
Gadsden's sodium vapor process; Frishmuth's claims . . . 269
H. von Groussillier's improvement; The Deville-Castner process . 270
Description of Castner's works; Conduct of the operations . . . 271
Efficiency of the process; Closing of these works 273

CHAPTER X.

Reduction of Aluminium Compounds by Means of Potassium or Sodium (*Continued*).

Methods based on the reduction of cryolite; Experiments of H. Rose (1855) 274
Experiments of Percy and Dick (1855) 283
Deville's methods (1856–8) 285
Tissier Bros'. methods; Impurity of the metal 287
Wöhler's improvements on Tissier's method; Gerhard's furnace . . 289
Thompson and White's patent; Hampe's experiment; Netto's experiments at Krupp's works at Essen 290

PAGE
Formation of the Alliance Aluminium Co. to work Netto's process . 291
Description of Netto's processes as actually carried out 292
Return from Netto's process; The apparatus used at Essen . . 293
Netto's other devices; Failure of the Alliance Aluminium Co.; Grabau's process (1887) 294
Advantages of Grabau's method of reducing aluminium fluoride . 295
Reactions in Grabau's process; Description of the operation . . 296
Description of the furnace and apparatus used 297
Great purity of the aluminium produced by Grabau 299

CHAPTER XI.

Reduction of Aluminium Compounds by the Use of Electricity.

Preliminary observations on the laws of electrolysis . . . 301
Calculation of the voltage necessary to decompose aluminium compounds 302
Utilization of such calculations; Electrolysis of aqueous solutions 303
Electrolysis using a soluble anode 304
Electrolysis using insoluble anodes 305
Electrolysis of baths containing several compounds 306
Deposition of aluminium from aqueous solution; Thomas and Tilly's patent 307
Corbelli's process; Thompson's claims; Gore's experiments . . . 308
Dr. Gore's error; Jeançon's process 309
Successful plating by the Harvey Filley Plating Co., of Philadelphia; Bertrand's assertion; Braun's methods 310
Dr. Fischer's experience with Braun's method; Farmer's apparatus; Senet's process; Frishmuth's plating; Overbeck and Niewerth's patent 311
Reinbold's recipe; Count R. de Montgelas' patents . 312
A. Walker's methods of procedure 313
Bull's proposition; Burghardt and Twining's patents 314
Patents of Gerhard and Smith; Taylor and Coulson; Experience of Sprague, Dr. Winckler and Dr. Gore 315
Opinions of Dr. Mierzinski, Hampe and Watt; Experiments of Dr. Lisle; Aluminium plating on the Philadelphia Public Buildings . 316
Aluminium plating by Mr. Darling at the Tacony Metal Co.'s works, Philadelphia 317
Non-aqueous electric processes; Difficulty of a satisfactory classification. 318
Davy's experiments (1810); Duvivier's experiment (1854) . . . 319
Bunsen's and Deville's methods (1854) 320
Details of Deville's apparatus 321
Details of Bunsen's apparatus 322

PAGE
Deville and Caron's method of plating aluminium on copper . . 323
Deville's experiments not an anticipation of Hall's process; Le Chatellier's patent 324
Monckton's proposition; Gaudin's process; Kagensbusch's process . 325
Berthaut's proposition to use dynamos; Grätzel's process . . . 326
Apparatus used by Grätzel; Later modification of his process . . 327
Prof. Fischer's criticism of Grätzel's process; Operation of the process at Bremen 328
Abandonment of the Grätzel process; Cowles Bros.' process . . . 329
Professor Mabery's description of the Cowles electric furnace . . 330
Dr. T. Sterry Hunt's remarks 331
Bradley and Crocker's form of retort used by the Cowles Co. . . 332
A. H. Cowles' form of furnace for continuous working; W. P. Thompson's paper on the Cowles process, read in England 333
Cowles Bros'. plant at Lockport, N. Y.; Details of the furnaces . . 334
Charging the furnaces 335
Details of the operation of Cowles' furnaces 336
The enlarged plant at Lockport 339
The Cowles Syndicate Co.'s works at Stoke-on-Trent, England . . 340
Analyses of Cowles Bros'. aluminium bronze 341
Analyses of ferro-aluminium and slags 342
The reactions in Cowles Bros'. process 343
Electrolysis necessarily a secondary factor in the operation of these furnaces 344
H. T. Dagger's experiment with the alternating current in a Cowles' furnace 345
History of the suit—Pittsburgh Reduction Co. *vs.* Cowles Electric Smelting and Aluminium Co. 346
Menges' patent; Farmer's process; Kleiner's process . . 347
Kleiner's experiments at Schaffhausen; Experimental plant in England 348
Dr. Gore's report on Kleiner's process 349
Output of aluminium by this process; Purity of the metal . . . 352
Kleiner's process outclassed by later processes; Lossier's proposition to decompose natural silicates of aluminium 353
Omholt's furnace; Minet's process 354
Apparatus used in Minet's process 355
Composition and properties of the baths 357
Minet's views on the reactions in his baths 358
Electrical measurements on Minet's pots 359
Separation of iron and silicon by a carefully regulated current . . 360
Output and quality of aluminium; Installations of this process . . 361
Minet's plant now working on the Hall process; Feldman's process . 362
Uselessness of Feldman's methods; Warren's experiments . . . 363
Zdziarski's patent; Grabau's apparatus 364

PAGE
Roger's process; Details of experiments 365
Dr. Hampe on the electrolysis of cryolite 368
History of Hall's experiments; Interference with Hèroult in the United States patent office 373
Specifications and claims of Hall's patents 374
Installation of Hall's process at Pittsburgh 376
Conduct of the operation in Hall's pots 377
Consumption of carbon anodes 378
Alumina used in the process; Efficiency of the electrolysis . . . 379
Estimate of cost of aluminium by the Hall process in 1889; Enlargement of the plant in 1890 381
Removal and enlargement of the plant in 1891; The Niagara Falls plant 382
Total output of the Pittsburgh Reduction Co.'s works; Efficiency of the process 383
Chemical reactions in Hall's baths; Alumina is the compound primarily decomposed 384
Theory of an aluminium oxy-fluoride not proven; Hèroult's processes. 386
Similarity of Hèroult's first process to that of Hall 387
Hèroult's alloy process; Installation at the Falls of the Rhine . . 388
Description of furnaces used 389
Conduct of the operation 390
Output at full efficiency; Theoretical output 392
Hèroult's alloy process not essentially electrolytic in its operation . 393
Hèroult's apparatus for pure aluminium 394
Recent enlargements at the Rhine Falls; The Hèroult process in France 395
Hèroult's alloy process at Boonton, N. J. 396
Details of cost of pure aluminium at Neuhausen; Faure's electrolytic process 398
Winkler's patent; Willson's crucible 399
Grabau's electrolytic process; Bucherer's patent 400
The Neuhausen sulphide process 401

CHAPTER XII.

Reduction of Aluminium Compounds by Other Means than Sodium or Electricity.

Reduction by carbon without the preseuce of other metals; Chapelle's attempt 402
Reinar's experiment with alum; Thowless' claim 403
Patent of Pearson, Liddon and Pratt; Bessemer's ideas 404
Reduction by carbon and carbon dioxide; Morris's claims . . . 405

PAGE
Ideas of P. A. Emanuel; Reduction by hydrogen 406
Gerhard's patent; Success of H. Warren in reducing alumina by hydrogen 407
Reduction by carburetted hydrogen; Fleury's experiments; Petitjean's statement 408
Experiments of Lébédeef, Dr. Lisle, R. E. Green 409
Reduction by cyanogen; Knowles' patent; Corbelli's process; Experiments of Deville and Lowthian Bell 410
Reduction by double reaction; Comenge's process; Niewerth's furnace 411
Process of G. A. Faure; Reduction by or in presence of copper; Calvert and Johnson's experiments 413
Evrard's method of making aluminium bronze; Benzon's patent . 414
Faure's patent 415
Experiments by Bolley, List, Dr. Lisle and Hampe 416
Experiments of Reichel and the author; Processes of A. Mann and L. Q. Brin 417
Reduction by or in presence of iron; Experiments of Comenge, Lauterborn, Reichel and the author; Niewerth's process 418
Thompson's method 419
Calvert and Johnson's experiments 420
Chenot's reclamation; Use of spongy iron 421
Faraday and Stodart's investigations; Wootz steel 422
Presence of aluminium in pig-iron; Reports by various analysts . . 423
Billings' attempt to reduce alumina in contact with iron; Cleaver's patent 424
Ostberg's statement about aluminium in pig-iron; Brin Bros.' process . 425
Baldwin's process for treating foundry iron 426
Alloy of the Williams Aluminium Company; Bamberg's method . . 427
Aluminium in pig-iron from Marshall Bros.' Newport furnace . , 428
Reduction by or in presence of zinc; Statements of Békétoff, Dullo, Basset 429
Wedding's remarks on Basset's process; Experiment by the author . 431
Works of F. J. Seymour at Findlay, Ohio 432
Lauterborn's method of reduction by zinc 433
Clark's doubtful processes 434
Dr. Lisle on reducing aluminium sulphide by zinc; Bamberg's patent; Reduction by lead 435
Reduction by manganese; Weldon's claim; Greene and Wahl's observations 436
Reduction by magnesium; Grätzel's patent; Roussin's statement; Montgelas' patent; Winkler's experiments on alumina 437
Reduction by antimony; Lauterborn's formulas; Experiment by the author 438
Reduction by tin; Process of Howard and Hill; Dr. Lisle's successful experiments 439

PAGE
Reduction by phosphorus; Grabau's process 440
Reduction by silicon; Wanner's claims 441

CHAPTER XIII.

Working in Aluminium.

Melting; Deville's recommendations 442
Biederman's directions; The author's methods 443
Bauxite and magnesite linings for crucibles and furnaces . . 444
Casting; Deville's remarks 445
Casting under pressure 446
Aluminium hollow-ware casting; Purification of aluminium; Freeing from slag 447
Freeing from dissolved impurities 449
Removal of zinc by distillation; Test of Buchner's method of purification by hydrogen gas 450
Purification by other gaseous reagents; Mallet's method of making chemically pure aluminium 451
Le Verrier's experiment with alkaline fluoride; Use of sodium to remove dissolved gases; Annealing; Hardening 452
Effect of chilling; Rolling; Beating into leaf 453
Rolling into tubes by the Mannesmann process; Very fine tubes made by Ivins, of Philadelphia; Drawing into wire . . . 454
Stamping and spinning; Grinding, polishing and burnishing . . 455
Special polishes for aluminium; Engraving; Cleaning and pickling; Mat 456
Welding by electricity; Soldering; Requirements of a satisfactory solder; Difficulties peculiar to aluminium 457
Deville's views on soldering aluminium 458
Mourey's first practical solders 459
Bell Bros.' method of using Mourey's solders 461
Frishmuth's solders; Schlosser's solder for dental work 462
Bourbouze's solder of aluminium and tin; Thowless' patent solder . 463
Patents of Sellon and Sauer; Novel's alloys for soldering . . . 464
Land's mechanical method; Aluminium specially prepared for soldering 465
Special fluxes recommended; Roman's solder . . . 466
The "Alsite" solder; The phosphorized solder of Mr. Joseph Richards, of Philadelphia 467
Success of Richards' phosphorized solder; Methods of using . . . 468
Coating other metals with aluminium; Veneering as practiced by M. Sevrard 469
Dr. Winckler's experience 470

PAGE
Dr. Gehring's method of aluminizing; Broadwell's process for coating sheet-iron 471
Plating other metals on aluminium; Gilding and silvering by Mourey and others 472
Veneering with silver or platinum; Rolling together aluminium and copper sheet; Wegner and Guhr's methods for electro-plating and coloring; Neeson's methods; The uses of aluminium 473
The place of aluminium among the useful metals 474
The first articles made of aluminium; Use in the French army . . . 475
Recommendations of the German military commission; Use for boats . 476
The yacht "Vendenesse;" The French aluminium torpedo boat . . 477
Explorer Wellman's boats and sledges; The yacht "Defender;" Use for vehicles and flying machines 478
Use architecturally and for decorations; Suitability for mine cages 479
Use in surgery; Dental plates 480
Use for scientific instruments; Captain Gordon's sextant . . . 481
Advantages of aluminium for engineering and electrical instruments; Chemical and bullion balances 482
Troemner's assay balances; Use for aluminium for minor coinage . . 483
Advantages and suitability for coinage; Use for chemical apparatus . 484
Use for culinary utensils; Its well-established advantages . . . 485
Use for table ware; Disadvantages for some articles 486
Aluminium constructions; Use in the battery . . . 487
Substitution for lithographic stone; Strecker's directions . . . 488
Use for flash-light powder; Recipes of Villon and Black . . . 489
Miscellaneous uses 490

CHAPTER XIV.

Alloys of Aluminium.

General remarks; Methods of making the alloys 492
Division of the alloys into two classes; Influence of Aluminium on the color of other metals 493
Contraction in alloying; Influence of aluminium on the specific gravity of other metals 494
Alloys with copper and iron to be considered separately; Alloys with antimony 495
Unusual property of one antimony alloy; Roche's unstable alloy . . 496
Aluminium and arsenic; Aluminium and bismuth; Aluminium and boron 497
Aluminium and cadmium; Aluminium and calcium 498
Aluminium and chromium; Langley's alloy 499
Aluminium and cobalt; Lejeal's test; Aluminium and gallium . . 500

PAGE

Aluminium and gold; Roberts-Austin's tests; Nürnberg gold; Andrews' experiments 501
Peculiar properties of the violet alloy discovered by Roberts-Austin . 502
Aluminium and lead; Cupellation of aluminium 503
Aluminium in anti-friction and type metal; Aluminium and magnesium. 504
Aluminium and manganese; Cowles' alloy 505
Aluminium and mercury; Deville's mistake; Simple experiment by the author; Cailletet's method of amalgamation 506
Joule's electrical experiment; Gmelin's observation; Method of amalgamation by Watts; Baille and Fèry's study of the subject . 507
Composition and properties of a definite aluminium amalgam . . 508
Action of air, water, acids and other metals, on aluminium amalgam; Aluminium and molybdenum 509
Aluminium and nickel; Tissier's tests 510
Lejeal's alloy with nickel; The Pittsburgh Reduction Co.'s alloy; Aluminium-nickel-copper alloys 511
Alloys of Sauvage, Baudrin, Webster; "Neogen" . . . 512
Webster's patented alloys 513
"Lechesne;" Method of production and properties . . 515
Cowles Bros.' "Aluminium Silver" and "Hercules Metal;" Andrew's alloys; Aluminium and phosphorus 516
Aluminium and platinum; Aluminium and silicon; Alloys formed while melting aluminium in crucibles 517
Influence of silicon on commercial aluminium 518
Aluminium and selenium; Aluminium and silver 519
Silver alloy for dental plates; "Tiers Argent" 520
Aluminium and sodium; Aluminium and tellurium 521
Aluminium and tin; Bourbouze alloy 522
Decomposition of some aluminium-tin alloys 523
Aluminium deleterious to tin-foil; Heycock and Neville, and Minet, on the fusing points of aluminium-tin alloys . . . . , . . 524
Aluminium and titanium; Wöhler's alloy 525
Levy's alloy; Alloy made by the Pittsburgh Reduction Company . . 526
Le Verrier's tests of titanium alloys; Aluminium and tungsten; Tests by Le Verrier 527
Aluminium and zinc; How zinc crept into some early commercial aluminium 528
Aluminium hardened by zinc and copper; Use of aluminium in the galvanizing bath and in Parke's desilverizing process 529
Aluminium-zinc-copper alloys; Aluminium brasses 530
Baur and Farmer's aluminium brasses; Tests of Cowles Bros'. brasses. 531
Professor Tetmayer's tests of aluminium brasses 532
Richards' bronze 533

CHAPTER XV.

Aluminium–Copper Alloys.

PAGE
Division into two classes; General properties 534
Melting points; Indications of chemical alloys 535
Alloys containing small amounts of copper 536
Aluminium hardened by copper; Tests of these alloys by Captain Julien 537
Aluminium hardened by German silver; Alloys containing small amounts of aluminium; Aluminium bronzes 538
History of the aluminium bronzes 539
Constitution of aluminium bronzes; Are they chemical combinations? 540
Morin's arguments to prove that the bronzes are chemical alloys . . 541
Action of small amounts of aluminium on bronze, brass and copper . 542
The reducing action of aluminium on dissolved oxides in molten metals 543
Bronzes made from alumina *versus* those made with metallic aluminium 544
Method of preparing the bronzes industrially 545
Influence of impurities in the aluminium or copper on the properties of the bronzes 546
Re-melting the bronzes improves their quality 547
Fluidity of the bronzes when melted; Casting the bronzes 548
Thomas D. West on "Casting Aluminium Bronze" . . 549
Shrinkage of the bronzes in cooling; Color . . 552
Specific gravity of the bronzes; Hardness 553
Transverse and compressive strength 554
Tensile strength; Lechatelier's tests 555
Tests of tensile strength by Deville, Strange, at the Watertown Arsenal and Washington Navy Yard 556
Details of tests of Cowles Bros'. bronzes 557
Diagram showing comparison of the strength of wrought-iron, tool-steel, and two aluminium bronzes 558
Professor Tetmayer's tests of the strength of the bronzes 559
Diagram showing the variation of strength and ductility of the bronzes with increasing proportions of aluminium; Le Chatelier's test of the strength at various temperatures 560
Annealing and hardening the bronzes; Forging, hammering and rolling 561
Filing, chipping and planing the bronzes 562
Anti-friction qualities of the bronzes 563
Conductivity for heat and electricity; Resistance to corrosion . . 564
Suitability of the bronzes for marine construction, chemical purposes and statuary 566

PAGE

Various uses to which the bronzes are applied; Suitability for heavy guns 567
Suitability for propeller blades 568
Brazing and soldering the bronzes 569
Silicon-aluminium bronze 570
Phosphor-aluminium bronze; Boron-aluminium bronze . . . 571

CHAPTER XVI.

Aluminium–Iron Alloys.

Iron in commercial aluminium 572
Alloys made by Tissier Bros., Michel, and Calvert and Johnson . . 573
Ferro-aluminium; Manufacture directly from alumina or from the metals 574
Aluminium in commercial steel, wrought-iron and pig-iron; Effect of aluminium on the properties of steel 575
Faraday's experiments with Wootz steel 576
Mitis castings; Use of aluminium in casting soft steel . . . 577
Experiments of Gilchrist and R. W. Davenport 579
Spencer's experiments on casting steels 580
"Steel-aluminium" for use in steel; Effect of aluminium on wrought-iron 581
History of the Mitis process 582
Rise and progress of the Mitis process; Raw material used . . . 583
Composition of a melt of mitis metal; Analyses of mitis castings . . 584
The process of making mitis castings 585
Conduct of the process at the Chester Steel Casting Works . . . 586
Explanation of the action of aluminium in making mitis castings; Ostberg's views 587
R. W. Davenport's explanation inadequate 588
The author's explanation of the increased fluidity of the melt . . 589
Why mitis castings are without blow-holes 590
Discussion of Davenport's experiment and Howe's explanation . . 592
Professor Le Verrier's explanation; Professor Arnold's experiment . 593
Summary of the author's views; Influence of aluminium in the puddling furnace 594
Influence of aluminium on cast-iron 595
Systematic investigation of this subject by Messrs. Keep, Maybery and Vorce 596
General outline of Keep's tests 597
Effect of aluminium on the solidity of the castings; Does the aluminium remain in the iron? 598
Effect of aluminium on the transverse strength of castings . . . 599
Effect on the elasticity of the castings 600

PAGE
Effect on the grain of the castings 601
General effect of aluminium on the fluidity of cast-iron; Shrinkage . 602
Effect on the hardness of the castings 603
Practical advantages in pouring the castings; General testimony of experienced foundrymen 604
Rationale of the action of aluminium on cast-iron 605

CHAPTER XVII.

Analysis of Aluminium and Aluminium Alloys.

Ingredients to be determined; Qualitative tests to precede the quantitative analysis 606
Qualitative blow-pipe tests; The specific gravity as an indication of purity 607
Schulze's test of the purity of commercial aluminium; Determination of silicon 608
Separation of combined and graphitic silicon 609
Regelsberger's method for dissolving and estimating silicon . . 610
Determination of iron and aluminium 611
Separations of iron from aluminium 613
Determination of lead; Determination of copper; Determination of zinc 614
Determination of tin; Determination of silver; Determination of sodium 615
Determination of chlorine; Determination of carbon; Determination of fluorine 616
Determination of titanium; Determination of chromium . . . 617
Analysis of ferro-aluminiums; Difficulty of estimating aluminium properly; Yates' method of procedure 618
Chancel's separation of iron from aluminium; Peter's modification of Chancel's separation; Thompson's experience 619
Satisfactory separation of iron from aluminium by potassium cyanide; Precipitation of iron by tri-methylamine 620
Blair's procedure for separating iron from aluminium . . . 621
Electrolytic separations of iron from aluminium; Classen's method; Professor Smith's method 622
Stead's method of separating iron from aluminium; Analysis of aluminium bronzes 623
Determination of tin, lead and copper in the bronzes 624
Determination of iron, aluminium, zinc, cobalt and nickel . . . 625
Analysis of aluminium-zinc alloy; Analysis of aluminium-tin, aluminium-silver, aluminium-nickel, aluminium-manganese and aluminium-lead alloys 626
General remarks on the usefulness of making qualitative tests preparatory to a quantitative analysis 627

Index 629

ALUMINIUM.

CHAPTER I.

HISTORY OF ALUMINIUM.

PLINY* tells us that *alumen* was the name of several kinds of salts used in dyeing, a white kind for dyeing bright colors and a dark kind for dull colors; that all alumen had an astringent taste and was colored black by the juice of the pomegranate (a reaction caused by iron). From all we can learn in the writings of Pliny and Columella, it appears that the white alumen must have been a mixture of aluminium sulphate with more or less sulphate of iron. Why it was called alumen is not certainly known, but it was probably derived from *lumen*, light, in allusion to its brightening the colors when used in dyeing.

About the eighth century a very pure alumen was made in Rocca, near Smyrna, and hence called *alumen Roccæ*, or in modern times, *rock alum*. This was, indeed, a pure sulphate of aluminium with sulphate of potash; in fact, our modern alum, differing from the ancient alumen in that it contained potassium, and was manufactured with care instead of being merely a natural substance. The old name was, however, still attached to the new product, and included in its scope the vitriols, that is, the sulphates of iron and copper. Even in the thirteenth century alum and vitriol were named together as related substances.

* Book 35, chapter 15.

Paracelsus* in the sixteenth century first separated alum and vitriols, on the ground that the base of the vitriols was metallic and that of alum earthy.

Ettmüller† discovered in 1684 that "alum is obtained by acting on clay with sulphuric acid."

Stahl in 1702 expressed clearly his conviction that the unknown base of alum was of the nature of lime or chalk, and for fifty years thereafter this was the generally accepted idea.

Hoffman‡ twenty years later announced that the base of alum appeared to him to be a true, distinct earth. Geoffroy, in 1728, Hellot, in 1739, and Pott, in his famous *Lithogeognosia*, in 1746, all reiterated this statement with increasing certainty, until it was finally generally received as an accepted fact, and the last named chemist gave it the name of *thonichte erde*, or *terre argilleuse*.

In 1754 Marggraff,§ in three able dissertations on alum and its earth, showed that this earth is certainly a distinct substance, that it exists in all natural clays and can be extracted therefrom by sulphuric acid, that the part of the clay not touched by the acid is silica, and that, therefore, the purest white clay contains only silica and the earthy base of alum. These memoirs settled conclusively the composition of clay, and give rise to the term *argil* or *argil pûr* as the name of the earthy base of alum. It was thus called until 1761, when Morveau,‖ intent on revising chemical nomenclature, decided that since alum was called *sel alumineux*, the proper name for its base should be *alumine*, thus avoiding all confusion with *argille* and *terre argilleux*, the terms designating clay and clayey earth. In German, however, the earth of alum is still called *thonerde*—clay earth; in English, the French *alumine* was adhered to until about 1820, when it was anglicised into *alumina*.

* Book 3, p. 64.

† Chymia Rationalis ac Experimentalis.

‡ Observationem physico-chemicarum Selectiorium, 1722.

§ Opusc. Chim. de Marggraff, I, p. 8.

‖ Dictionnaire de Physique, Article "Alun."

Returning to the time of Marggraff, we find soon after the publication of his paper indications that chemists suspected this newly-identified earth to be a compound body, and the search after aluminium had truly begun.

Macquer,* in 1758, wrote, "the earth of alum is white, infusible, and I suspect that it has a relation more or less distant with the metallic earths."

Baron,† a professor of chemistry in Paris, is our first recorded experimenter on the isolation of aluminium. In 1760 he communicated a memoir to the Academy in which he said: "Marggraff of Berlin has shown us what the earth of alum is not, without showing very definitely what it is. I believe the base of alum to be of a metallic nature, for the following reasons: 1. It has almost no properties in common with the known earths. 2. It has analogies with the metallic earths, *e. g.*, its astringent salts." Baron then proceeds to say that he had tried all known methods of reducing this base, but without result, and concludes by saying, "If I had been fortunate enough to reduce the base of alum to a metal, no other argument would be needed, and that which to-day I conjecture would be a demonstrated fact. I am far from regarding the problem as an impossibility. I think it not too venturesome to predict that a day will come when the metallic nature of the base of alum will be incontestably proven."

Baron does not record the manner in which he tried to reduce alumina, but it is probable that he mixed it with carbon or some organic substance, with salt or soda for flux, and heated as highly as possible in a charcoal fire. We nevertheless have his word that he tried all the methods of reduction then known.

Lavoisier‡ regarded it as highly probable that alumina was the oxide of a metal, the affinity of the metal for oxygen being

* Memoires de Paris, 1758.

† Memoires de l' Acad. Royale, April 16, 1760, p. 274.

‡ Journal de Physique, May, 1782.

so strong that neither carbon nor any of the reducing agents then known was able to overcome it.

Ruprecht and Tondi,* two Austrian chemists, repeated Baron's experiments in 1790. They thought that hitherto the reducing agent had not been intimately enough mixed with the alumina, and that the temperature used had not been sufficiently high, so they mixed alumina very intimately with charcoal dust, made it into a paste with oil, and spread it on the inner walls of a Hessian crucible, which was finally filled up with powdered charcoal and a layer of bone ash placed on top. Putting the crucible in a forge, a strong fire was kept up for three hours. As a result, small metallic particles were found on the inner sides of the crucible. These they supposed to be the metallic base of alumina.

Savaresi,† in Italy, and Klaproth and Karsten, in Germany, duplicated this experiment with similar results, and then analyzed the globules of metal obtained. They found them to be phosphide of iron, the iron coming from the charcoal used and the phosphorus from the bone ash. Professor Klaproth referred to this incident as "the pretended metallization of the earths," and said further, "if there exists an earth which has been put in conditions where its metallic nature should be disclosed, if it had such, an earth exposed to experiments suitable for reducing it, tested in the hottest fires by all sorts of methods, on a large as well as on a small scale, that earth is certainly alumina, yet no one has yet perceived its metallization."

Lavoisier succeeded in melting alumina in a charcoal fire fed by pure oxygen. Dr. Hare, in 1802, melted it with the oxy-hydrogen blow-pipe to a white enamel, but noticed no signs of reduction to metal.

In 1807 Sir Humphry Davy attacked the alkaline earths with his great battery which had isolated potassium and so-

* Allgemeiner Zeitung, Nov., 1790.

† Annales de Chimie, 1791, x., 254.

dium. His first experiment, mixing alumina with red oxide of mercury, and passing the electric current through this in contact with metallic mercury, gave no result. He then melted alumina with potash, and passed the current from 500 plates through it. The receiving blade received a metallic coating, and on dipping it into water the latter was decomposed, and afterwards the solution was proved to contain alumina. An experiment with soda gave a similar result. Davy had in fact electrolyzed the aluminates of potassium and sodium, and obtained metallic alkali and aluminium, but he was unable to isolate the latter by any means he could devise.

Davy next tried to reduce alumina by heating it with metallic potassium. Some potassium oxide was formed, showing some reduction had taken place, but he could find no metal.

In 1809 Davy had a new battery of 1000 plates, and with it fused iron to whiteness in the arc in contact with alumina. The iron became somewhat whiter, and when dissolved in acids showed that it contained aluminium. The fact was thus established that *alumina can be decomposed while fluid in the electric arc, and its metal alloyed with iron.*

Davy next mixed alumina with potassium and iron filings, hoping that the iron would collect any metal reduced from the alumina. On melting this mixture a button resulted which was white and harder than iron, and was undoubtedly an alloy of iron and aluminium, but Davy could not separate the two metals. In concluding the recital of his experiments he said, "Had I been fortunate enough to isolate the metal after which I sought, I would have given it the name *alumium*.

In making this suggestion it is perfectly plain that Davy intended this word to represent the metal from alum, simply starting with *alum*, and adding *ium* as the proper termination. Objections were very soon thereafter made to this proposed name, not to the termination *ium*, which was considered absolutely proper, but to the root or stem of the word. It was maintained by French, German and Swedish writers that the name of the new metal should be derived from its oxide, and

that the stem of the word should therefore be *alumin*, and thence the name *aluminium*. Davy was influenced by these criticisms to the extent of changing in 1812 to *alumin-um*, but no writers, except a very few English and, in recent years, some Americans, have used this spelling.

Prof. Benj. Silliman* was in 1813 repeating Hare's experiment of fusing alumina with the oxy-hydrogen blowpipe. The alumina was supported on charcoal, and he noticed small metallic globules rolling and darting out from under the fused mass and burning with a bright light. These globules could have been nothing else than *aluminium reduced from fluid alumina by charcoal.* The metal burnt, however, almost instantly, and no globules could be obtained.

The Swedish chemist Oersted believed, in 1824, that he had isolated aluminium. He used anhydrous aluminium chloride as a starting point, and heated it with potassium amalgam, thinking that the potassium would reduce the chloride and leave an amalgam of aluminium and mercury, from which the latter could be distilled away. Potassium, however, when amalgamated with mercury is not powerful enough to reduce aluminium chloride, although it can reduce it if used alone, and so Oersted missed, by a very little, the honor of first isolating aluminium.

Berzelius was also a worker on the aluminium problem. He wrote to Sir Humphry Davy, in 1809, that he had reduced alumina by heating it with carbon in the presence of iron, but it is probable that he found himself mistaken, as he does not refer to this matter in any of his later writings; once, however, he came within a very little of succeeding. He had studied the composition and formula of the mineral cryolite, had made it artificially, and also the corresponding potassium salt. It then occurred to him that this latter salt might be reduced by metallic potassium. He made the experiment in a crucible, carefully washed the fusion with water, but found no metal. It

* Memoirs Connecticut Acad. of Arts and Science. Vol. I, 1813.

is quite evident that his sole mistake was in using an excess of potassium, which, after the reduction, gave on solution in water a caustic alkali solution, which immediately dissolved all the reduced aluminium. Had he used an excess of the fluoride salt, the story would almost certainly have read differently, because this reduction has since then been repeatedly performed. The date of this experiment was 1825.

In 1827, Frederick Wöhler, Professor of Chemistry at the University of Göttingen, after repeating Oersted's experiment with unsatisfactory results, modified the experiment by using

FREDERICK WÖHLER.

pure potassium as the reducing agent, instead of its amalgam. He obtained a grey, metallic powder, which was finely-divided aluminium. He was unable to melt this powder into a button, so as to determine its properties *en masse*, but he described many of its chemical properties, and produced from it some aluminium compounds which had not been before made, such as the sulphide and arsenide. This powder was not absolutely pure aluminium, as it contained a little platinum from the crucible in which the reduction was performed, and some potassium, which lessened its resistance to chemical agents. At that time

no further use was made of these facts. Later, in 1845, on making vapor of aluminium chloride pass over potassium placed in platinum boats, Wöhler obtained the metal in small malleable globules of metallic appearance, from which he was able to determine the principal properties of aluminium. But the metal thus obtained was scarcely as fusible as cast iron, without doubt because of the platinum with which it had alloyed during its preparation. In addition to this, it decomposed water at 100°C, from which we suppose that it was still impregnated with potassium or aluminium chloride. It is to

H. ST. CLAIRE DEVILLE.

H. St. Claire Deville that the honor belongs of having, in 1854, isolated aluminium in a state of almost perfect purity, determining its true properties.

Thus, while aluminium had been isolated in 1827, for eighteen years its properties *en masse* were unknown, and it was only at the end of twenty-seven years after its discovery that the true properties of the pure metal were established by Deville. The second birth of aluminium, the time at which it stepped from the rank of a curiosity into the number of the useful metals, dates from the labors of Deville in 1854. If

Wöhler was the discoverer of aluminium, Deville was the founder of the aluminium industry.

In commencing researches on aluminium, Deville, while he applied the method of Wöhler, was ignorant of the latter's results of 1845. Besides, he was not seeking to produce aluminium that he might turn its valuable properties to practical account, but that it might serve for the production of aluminium protoxide (AlO), which he believed could exist as well as ferrous oxide (FeO). The aluminium he wished to prepare would, he thought, by its further reaction on aluminium chloride, form aluminium proto-chloride ($AlCl^2$), from which he might derive the protoxide and other proto-salts. But on passing vapor of aluminium chloride over the metallic powder formed by reduction by potassium, this proto-chloride was not thus produced; he obtained, inclosed in a mass of aluminium-potassium chloride ($AlCl_3.KCl$), fine globules of a brilliant substance, ductile, malleable, and very light, capable of being melted in a muffle without oxidizing, attacked by nitric acid with difficulty, but dissolved easily by hydrochloric acid or caustic potash with evolution of hydrogen.

Deville troubled himself no more about the proto-salts of aluminium, but, recognizing the importance of his discovery, turned his attention to preparing the metal. He was at this time Professor of Chemistry in the Ecôle Normale, Paris; his salary was but 3000 francs, his estate was small, and he was practically without the means of doing anything further.

On Monday, February 6, 1854, Deville read at the séance of the Academy a short paper entitled "Aluminium and its Chemical Combinations," in which he explained the results of this experiment as showing the true properties of aluminium, and also furnishing a method of purifying it, and declared his intention of commencing immediate search for a process which could be economically applied on a commercial scale. M. Thenard, at the close of the communication, remarked that such experiments ought to be actively pursued, and that, since they were costly, he believed the Academy would hasten the accom-

plishment of the work by placing at Deville's disposal the necessary funds. As the outcome of this, the Academy appointed Deville one of a committee to experiment on producing aluminium, and 2000 francs were placed at his disposal for the work.

It was on the occasion of the reading of this paper that M. Chenot addressed a note to the Academy on the preparation of aluminium and other earthy and alkaline metals, in which he claimed, in some regards, priority for his inventions. (See further under "Reduction by Carbon.") This note was reserved to be examined by a commission appointed to take notice of all communications relative to the production of aluminium.

With the funds thus placed at Deville's disposal, he experimented at the Ecôle Normale for several months. As potassium is very dangerous to handle, cost then 900 francs a kilo, and gives comparatively but a small return of aluminium, Deville, in view of the successful work of Bunsen on the electric decomposition of magnesium chloride, tried first the reduction of aluminium chloride by the battery. On March 20, 1854, Deville announced to the Academy in a letter to Dumas that he had produced aluminium without alkaline help, and sent a leaf of the metal thus obtained. At that time Thenard, Boussingault, Pelouze, Peligot, and later, de-la-Rive, Regnault, and other well-known scientists, shared the honor of assisting in the laboratory experiments. Deville sent, in the following May, a mass of five or six grammes weight to Liebig, making no secret of the fact that it was reduced by the battery; while Balard at the Sorbonne, and Fremy at the Ecôle Polytechnique, publicly repeated his experiments and explained them in all their details. Although these experiments succeeded quite well, yet because of the large consumption of zinc in the battery used the process could evidently not be applied industrially, and Deville felt obliged to return to the use of the alkaline metals.

Towards the middle of 1854 Deville turned to sodium, without a knowledge of those properties which render it so preferable to potassium, but solely because of its smaller equivalent

(23 to that of potassium 39) and the greater cheapness of soda salts. He studied the manufacture of sodium, with the aid of M. Debray, in his laboratory at the Ecôle Normale, and their experiments were repeated at Rousseau Bros.' chemical works at Glacière, when they were so successful that Rousseau Bros. very soon put metallic sodium on the market at a much reduced price. It is said that while metallic sodium was a chemical curiosity in 1855, costing something like 2000 francs a kilo, its cost in 1859 is put down at 10 francs. Deville carried this process to such perfection that for twenty-five years it remained almost precisely at the status in which he left it in 1859. In order to still further cheapen aluminium, Deville busied himself with the economic production of alumina, which gave later a lively impulse to the cryolite and bauxite industries.

On August 14, 1854, Deville read a paper before the Academy describing his electrolytic methods at length (see under "Reduction by Electricity"), showing several small bars of the metal, and also stating some of the results already achieved by the use of sodium, but not going into details, since he believed that numerous analyses were necessary to confirm these results —which he was unable to have made with the funds at his disposal. He also stated that the desire to show, in connection with his assertions, interesting masses of the metal, alone prevented the earlier publication of the methods used. Several days before this, Bunsen published in Poggendorff's Annalen a process for obtaining aluminium by the battery, which resembled Deville's method, but of which the latter was ignorant when he read his paper. Thus it is evident that the isolation of aluminium by electrolysis was the simultaneous invention of Deville and Bunsen.

After reading this paper, Deville caused a medal of aluminium to be struck, which he presented to the Emperor Napoleon III. The latter, looking forward to applying such a light metal to the armor and hemlets of the French Cuirassiers, immediately authorized experiments to be continued at his own expense on a large scale. This anticipation ultimately proved

impracticable, but the ambition in which it was bred was caused for once to minister to the lasting benefit of mankind. Deville, however, about this time accepted, in addition to his duties as professor at the Ecôle Normale, a lectureship at the Sorbonne (where he afterwards obtained a full professorship), and it was not until March of the next year that the experiments at the cost of the Emperor were begun.

It was about August, 1854, that two young chemists, Chas. and Alex. Tissier, at the suggestion of Deville, persuaded M. de Sussex, director of a chemical works at Javel, to let them experiment in his laboratory (of which they had charge) on the production of sodium.

Towards the commencement of 1855, Deville took up the industrial question, the Emperor putting at his disposition all the funds necessary for the enterprise, and in March the investigator went to work and installed himself at the chemical works at Javel in a large shed which the director, M. de Sussex, kindly put at his service.

The investigations were carried on here for nearly four months, ending June 29th, and the process elaborated was an application on a large scale of the experiments he had made at the expense of the Academy, which he described in his paper of August 14, 1854, and by which he had been able to obtain a few pencils of metal. In this work such success attended his efforts that on June 18 Deville presented to the Academy through M. Dumas large bars of pure aluminium, sodium, and masses of aluminium chloride. The members and large audience were loud in their admiration and surprise at the beauty of the metal. Dumas stated that the experiments at Javel had put beyond a doubt the possibility of extracting aluminium on a large scale by practical processes. Deville's paper was then read, describing all his processes in detail, and concluding with the following words: "After four months of work on a large scale, undertaken without responsibility on my part, and, in consequence with the tranquility and repose of mind which are so often wanting to the investigator, without the preoccupation

of expense, borne by His Majesty the Emperor, whose generosity had left me entire liberty of action, encouraged each day by distinguished men of science, I hope to have placed the aluminium industry on a firm basis."

It was the metal made at this time at Javel which was exhibited at the Paris Exposition in 1855. In the Palais de l'Industrie, among the display from the porcelain works at Sevres, were ingots and some manufactured objects. The first article made of aluminium was, in compliment to the Emperor, a baby-rattle for the infant Prince Imperial, for which purpose it must have served well, because of the sonorousness of the metal.

After terminating these experiments Deville continued working at the Ecôle Normale, the Emperor defraying his expenses, until April, 1856. The memoir published in the *Ann. de Chim. et de Phys.*, April, 1856, contains, besides the results obtained at Javel, the improvements devised in the meantime.

It appears that when Deville first went to Javel, he had for assistants the Tissier Brothers, who were charged by M. de Sussex to give him all the aid they could. Since the previous autumn the Tissiers had been experimenting on sodium furnaces, and now, in concert with Deville, they drew up plans for furnaces, and aided in devising other apparatus. Under these circumstances the furnace for the continuous manufacture of sodium in cylinders was devised, which the Tissiers claim Deville strongly advised them to make their property by patenting, asking only from them the use of it for his experiments. So, immediately after the experiments were ended, in July, the Tissiers patented the furnace in question, and, leaving Paris, took charge of M. Chanu's works at Rouen. On the other hand, Deville always reproached them for acting in bad faith. He says that after having assisted for about two months in setting up his apparatus, being forced to leave the works because of misunderstandings between them and M. de Sussex, they were admitted to his laboratory at the Ecôle Normale, and initiated by him into the knowledge of all those processes which they made use of afterwards, then suddenly left, taking

drawings of furnaces, details of processes, etc., which they not only made free use of, but even patented. However, whichever party was in the right (and those who comprehend the character of Deville can hardly doubt which was), the fact stands that in July, 1855, M. Chanu, an honorable manufacturer of Rouen, founded a works in which Deville's processes were to be applied, and intrusted the direction of it to the Tissier Brothers.

The history of the works at Rouen is thus described by the Tissiers in their book on aluminium, of which we shall speak a little further on:

"In July, 1855, Messrs. Malétra, Chanu, and Davey, of Rouen, formed a company to produce aluminium, and we were intrusted with the organization and special charge of the industry. The commencement was beset with difficulties, not only in producing, but in using the metal. It then sold at $200 per kilo, the price being an insurmountable obstacle to its employment in the arts. The small capital at our disposal was not enough to start the industry, to pay general expenses, and the losses occasioned by the many experiments necessary. On February 28, 1856, the society was dissolved. In April of the same year, M. William Martin, struck by the results already obtained and sanguine of greater success, united with us. From that time daily improvements confirmed M. Martin's hopes, and in 1857 the works at Amfreville-la-mi-Voie, near Rouen, sold the metal at $60 per kilo ($2 per oz.). The laboratory of this works was devoted to researches on everything concerning the production and application of aluminium. M. Martin has our sincere gratitude for the kindness with which he so willingly encouraged and contributed to the progress of the manufacture of this wonderful metal."

The process ultimately used at Amfreville was the reduction of cryolite by sodium, but the enterprise was not a permanent success, and after running for a few years it was abandoned and the works closed.

Returning to Deville, we find that after leaving Javel one of

the first subjects he investigated was the use of cryolite for producing aluminium. The researches made with the aid of MM. Morin and Debray were published in the memoir of April, 1856, and became the basis of the process carried out by the Tissiers at Rouen. Besides this, Deville perfected many of the details of a practical aluminium plant, with the result that in the spring of 1856 he united with Messrs. Debray, Morin, and Rousseau Bros. (the latter manufacturers of chemicals at Glacière, in whose works aluminium had been made since the middle of 1855) and put up new apparatus in the works at Glacière, the company furthering the work entirely at their own cost. This enterprise lasted for more than a year, during which a number of processes were tried and continued improvements made, so that towards August of the same year aluminium was put on the market in Paris at 300 francs a kilo, being one-third what it cost a year previous.

Finally, in April, 1857, the little works at Glacière, a suburb of Paris, in the midst of gardens and houses, and turning into the air fumes charged with chlorine and salts, was obliged by reason of general complaints to stop making aluminium. The plant was moved to Nanterre, where it remained for some years, under the direction of M. Paul Morin, being on a scale four times as large as the actual demand. Afterwards part of the plant was moved to the works of H. Merle & Co., at Salindres, and later on the whole plant, where the manufacture was until recently carried on by Pechiney & Co. The works at Nanterre were really the only "aluminium works" built by Deville, the others were plants installed at general chemical works; but these at Nanterre were built by the united efforts of Deville, his brothers and parents, and a few personal friends. Among those who aided Deville, especially in the problems which the new industry presented, he speaks warmly of Messrs. d'Eichtal, Lechatelier, and Jacquemont.

In 1858 the Tissiers wrote and published a small work entitled "Recherches sur l'Aluminium," which, in view of what Deville could have written about the subject, was a decided

misrepresentation of the results which had been thus far accomplished. Deville thought that the industry was yet too young to merit any sort of publication, yet he näively writes in his work "De l' Aluminium," in 1859, "I will sincerely acknowledge that my writing is a little due to my pride, for I decided to take the pen to speak of my work, only to avoid seeing it belittled and disfigured as it has been lately in the book written by MM. Tissier."

Deville published his book in September, 1859, and he concludes it with these words: "I have tried to show that aluminium may become a useful metal by studying with care its physical and chemical properties, and showing the actual state of its manufacture. As to the place which it may occupy in our daily life, that will depend on the public's estimation of it and its commercial price. The introduction of a new metal into the usages of man's life is an operation of extreme difficulty. At first aluminium was spoken of too highly in some publications, which made it out to be a precious metal, but later these estimates have depreciated even to the point of considering it attackable by pure water. The cause of this is the desire which many have to see taken out of common field-mud a metal superior to silver itself; the opposite opinion established itself because of very impure specimens of the metal which were put in circulation. It seems now that the intermediate opinion, that which I have always held and which I express in the first lines of my book, is becoming more public, and will stop the illusions and exaggerated beliefs which can only be prejudicial to the adoption of aluminium as a useful metal. Moreover, the industry, established as it now is, can be the cause of loss to no one; as for myself, I take no account of the large part of my estate which I have devoted, but am only too happy if my efforts are crowned with definite success, in having made fruitful the works of a man whom I am pleased to call my friend, the illustrious Wöhler."

Contemporary with the early labors of Deville, among the numerous chemists and metallurgists investigating this attract-

ive field, we find Dr. Percy in England and H. Rose in Germany, whose experiments on the reduction of cryolite by sodium were quite successful, and are herein described later on.

As early as 1856 we find an article in an American magazine * showing that there were already chemists in the United States spending time and money on this subject. The following is the substance of the article alluded to: "Within the last two years Deville has extracted 50 to 60 lbs. of aluminium. At the present time, M. Rousseau, the successor of Deville in this manufacture, produces aluminium which he sells at $100 per pound. No one in the United States has undertaken to make the metal until recently Mons. Alfred Monnier, of Camden, N. J., has, according to the statement of Prof. James C. Booth in the "Penn. Inquirer," been suceessful in making sodium by a continuous process, so as to procure it in large bars, and has made aluminium in considerable quantity, specimens of which he has exhibited to the Franklin Institute. Mons. Monnier is desirous of forming a company for the manufacture of aluminium, and is confident that by operating in a large way he can produce it at a much less cost than has heretofore been realized. We would suggest the propriety of giving aid to this manufacture at the expense of the government, for the introduction of a new metal into the arts is a matter of national importance, and no one can yet realize the various and innumerable uses to which this new metal may be applied. It would be quite proper and constitutional for Congress to appropriate a sum of money, to be expended under the direction of the Secretary of the Treasury in the improvement of this branch of metallurgy, and in testing the value of the metal for coinage and other public use."

In the next volume of the "Mining Magazine" † there is a long article by Mr. W. J. Taylor, containing nothing new in regard to the metallurgy of aluminium, but chiefly concerned in calculating theoretically the cost of the metal from the raw

* Mining Magazine, 1856, vii., 317.

† Mining Magazine, viii., 167 and 228. Proc. Ac. Nat. Sci., Jan., 1857.

materials and labor required by Deville's processes, and concluding that it was quite possible to make it for $1.00 per pound.

In 1859 the first aluminium works in England were started at Battersea, near London, by C. H. Gerhart, using Deville's process. No details are obtainable respecting the size of this works. M. Henri Brivet informs me that they had no connection with Bell Bros.' enterprise, started the next year after. and that they closed operations about 1865.

In 1860, Bell Bros. established a plant at Washington, near Newcastle-on-Tyne, with the immediate co-operation of Deville. In 1862 this company was selling aluminium at 40 shillings per troy pound, and they continued operations until 1874, when they closed because the business was no longer profitable.*

It was probably shortly after 1874 that the large firm of J. F. Wirtz & Co., Berlin, made an attempt to start an aluminium works. The project drooped before it was well started; and it is only within the last few years that Germany has possessed a flourishing aluminium industry.

The further we get away from an age the better able are we to write the true history of that age. And so as years pass since the labors of Wöhler, Deville, and Tissier, we are now able to see better the whole connected history of the development of this art. Dr. Clemens Winckler gives us a comprehensive retrospect of the field seen from the standpoint of 1879, from which we condense the following:† "The history of the art of working in aluminium is a very short one, so short that the present generation with which it is contemporary is in danger of overlooking it altogether. The three international exhibitions which have been held in Paris since aluminium first began to be made on a commercial scale form so many memorials of its career, giving as they did at almost equal intervals evidence of the progress made in its application. In 1855 we meet for the first time in the Palais de l'Industrie with a large

* Personal communication to the writer from Sir Lowthian Bell.

† Industrie Blätter, 1879; Sci. Am. Suppl., Sept. 6, 1879.

bar of the wonderful metal, docketed with the extravagant name of the 'silver from clay.' In 1867 we meet with it again worked up in various forms, and get a view of the many difficulties which had to be overcome in producing it on a large scale, purifying and moulding it. We find it present as sheets, wire, foil, or worked-up goods, polished, engraved, and soldered, and see for the first time its most important alloy, aluminium bronze. After a lapse of almost another dozen years we see at the Paris Exhibition of 1878 the maturity of the industry. We have passed out of the epoch in which the metal was worked up in single specimens, showing only the future capabilities of the metal, and we see it accepted as a current manufacture having a regular supply and demand, and being in some regards commercially complete. The despair which has been indulged in as to the future of the metal is thus seen to have been premature. The manufacture of aluminium and goods made of it has certainly not taken the extension at first hoped for in its behalf; the lowest limit of the cost of manufacture was soon reached, and aluminium remains as a metal won by expensive operations from the cheapest of raw materials.

"There are several reasons why the metal is shown so little favor by mathematical instrument makers and others. First of all, there is the price; then the methods of working it are not everywhere known; and further, no one knows how to cast it. Molten aluminium attacks the common earthen crucible, reduces silicon from it, and becomes gray and brittle. This inconvenience is overcome by using lime crucibles, or by lining an earthen crucible with carbon or strongly burnt cryolite clay. If any one would take up the casting of aluminium and bring it into vogue as a current industrial operation, there is no doubt that the metal would be more freely used in the finer branches of practical mechanics."

At the time of Dr. Winckler's writing, the extraction of aluminium in France was carried on by Merle & Co., at Salindres, while the Société Anonyme de l'Aluminium, at Nanterre, worked up the metal. Both firms were represented at the Ex-

position of 1878. The prices quoted then were 130 francs a kilo for aluminium, and 18 francs for 10 per cent. aluminium bronze. From 1874, when Bell Bros.' works at Newcastle-on-Tyne stopped operations, until 1882, when a new enterprise was started in England by Mr. Webster, the French company were the only producers of aluminium.

Regarding the prospects of the aluminium industry at this period, we can very appropriately quote some remarks of the late Mr. Walter Weldon, F. R. S., who was a personal friend of M. Pechiney (director of the works at Salindres), had given great attention to aluminium, and was considered as a first authority on the subject. Speaking in March, 1883, before the London Section of the Society of Chemical Industry, he stated that the only method then practiced for the manufacture of aluminium was Deville's classical one; that at Salindres, M. Pechiney had improved and cheapened it, but that was all the progress made in the industry in twenty-five years. Continuing, Mr. Weldon outlined the possible lines on which improvements might be made, as:

1st. Cheapening the production of aluminium chloride, or of aluminium-sodium chloride.

2d. Substituting for these chlorides some other cheaper anhydrous compounds of aluminium not containing oxygen.

3d. Cheapening sodium.

4th. Replacing sodium by a cheaper reducing agent.

Mr. Weldon exhibited the relative cost of the materials used in making aluminium, as then carried on by M. Pechiney, as:

Producing the alumina	10 per cent.
" " double chloride	33 "
" " sodium and reducing therewith	57 "

"Discussing these figures, it is seen that the cost of the alumina forms but a small item in the cost of the metal, since a saving of 50 per cent. in its cost would only cheapen the metal 5 per cent. A large margin is, however, left in the conversion

of the alumina into the chloride, and it is here that a large saving may be expected, either in cheaper methods of producing the chloride or by the substitution of some other cheaper salt for the chloride. The only other suitable compounds which might replace the latter are the fluoride, iodide, bromide, sulphide, phosphide, or cyanide. The fluoride has been used to some extent in the form of cryolite, but, from the impurities in the mineral and its corrosive action on the apparatus used for reduction, the metal produced is very much contaminated with iron and silicon. The bromide and iodide, no matter how produced, would always be too costly to replace the chloride. The production of the sulphide in a suitable form from which the metal can be extracted has thus far not proved a success, and even if ever it be thus produced in a suitable condition, it is not at all likely to be as cheap a material to use as the chloride. The phosphide and cyanide can thus far only be produced from the metal itself, and are, therefore, totally out of the question. To find a substitute for sodium as a reducing agent has been a favorite object of research among chemists for the past thirty years, and although every element occurring in any abundance, or obtainable at a cheaper rate than sodium, has been tried under almost all conditions, yet absolutely nothing has been accomplished in this direction that would entitle any one to the belief that aluminium can ever be produced chemically without the use of sodium. So absorbing to those interested in the search for a substitute for sodium has the occupation proved, that the effort to cheapen sodium did not receive anything like its fair share of attention. Since of the 57 per cent. ascribed to the cost of sodium and reduction, 50 per cent. represents the sodium, which thus costs about six shillings a pound, there is seen to be a very large margin for improvements, since the raw materials for a pound of sodium do not cost over 1 or at most 2 shillings."

In 1882 the cost of aluminium was materially cheapened by the applications of the inventions of Mr. Webster, which, in accordance with the analysis of the problem made by Mr. Weldon,

consisted principally in the cheap production of alumina and its conversion into chloride. Mr. Webster had experimented on this subject many years, and in 1881 and 1882 took out patents for his processes, and organized the "Aluminium Crown Metal Company," located at Hollywood, near Birmingham, where several thousand pounds were expended in plant. Business was soon commenced on a large scale, the company producing, however, many other alloys besides those of aluminium. The business grew until it soon became the serious competitor of the French company, and practically controlled the English market. However, a radical change of still greater importance in the sodium process was made in 1886 by an invention of Mr. H. Y. Castner, of New York City. This gentleman conceived the plan of reducing sodium compounds in cast-iron pots, from a fused bath of caustic soda, by which the reduction is performed at a much lower temperature, and the yield of sodium is very much more than by the Deville method. The application of this process on a large scale, with the use of gas furnaces and other modern improvements, has lowered the cost of sodium from $1 per pound to about 20 or 25 cents. It is but just to say that Mr. Castner's invention was by no means a chance discovery. For four years he worked in a large laboratory fitted up for this special purpose, and after many discouragements in trying to produce aluminium by means other than that of sodium, was led finally to consider that the cheapening of this metal was the most promising method for cheapening aluminium, and after much patient, hard work, success was at last reached.

Mr. Castner's patent was taken out in the United States in June, 1886, and, while being the first one granted on that subject in this country, is said also to be the only one taken out in the world since 1808. With the assistance of Messrs. J. H. and Henry Booth, of New York City, Mr. Castner demonstrated the process by building and operating a furnace on a somewhat large scale. This being accomplished, Mr. Castner crossed to England and met the representatives of the Webster process,

with whom it was evident a combination would be especially advantageous to both parties; for, with cheap aluminium chloride and cheap sodium, it was clear that a strong process could be built up. Mr. Castner then demonstrated plainly, by erecting a furnace and operating it for several weeks, that his process was all that he claimed for it. As a result of this success, the "Aluminium Company, Limited," was incorporated in June, 1887, with a share capital of £400,000, "to acquire the patents and work and develop the inventions of James Webster for the manufacture of pure alumina and certain metallic alloys and compounds, together with the business at present carried on by the Webster Patent Aluminium Crown Metal Company, Limited, in Birmingham, Sheffield, and London, England, and also to acquire the patents and work and develop the invention of H. Y. Castner for the manufacture of sodium and potassium." Mr. Webster was paid £230,000 for the business, properties, stock, etc., of the Crown Metal Company, while £140,000 was allowed for the sodium patents. The new company appointed Mr. Castner managing director, and the erection of large works was immediately begun at Oldbury, near Birmingham. These works were started in operation at the end of July, 1888. They covered five acres of ground, and their daily production for some time was about 250 pounds, which was sold at 20 s. per pound. This was increased during 1889 to nearly 500 pounds a day, and the selling price of the aluminium decreased to 16 shillings. Early in 1891, however, this company was forced to stop the manufacture of aluminium, as its selling price was reduced by the owners of the electrolytic processes below 4 shillings per pound, at which price the sodium processes could no longer compete. The company continued in the sodium business, and in 1893, with their original capital of £400,000 written down to £80,000, we hear that they are doing a prosperous business under Mr. Castner's direction, producing sodium and sodium peroxide, and making caustic soda and bleaching powder by electrolysis of common salt. In view of the prominent part which this works took in the aluminium industry from

1888 to 1891, and as an acknowledgment to Mr. Castner's able direction, the methods there used have been rightly designated as "The Deville-Castner Process."

We have followed the progress of the Webster and Castner processes up to the date of starting the works at Oldbury, because the continuity of the advances made in the old Deville process would hardly allow of a break in order to mention other processes arising meanwhile. However, the years since 1884 have witnessed not one but several revolutions in the aluminium industry. The great advances made in dynamo-electric machinery in the last decade have led to the revival of the old methods of electrolysis descovered by Deville and Bunsen, and to the invention of new methods of decomposing aluminium compounds electrolytically. It will be recalled that the first small pencils of aluminium made by Deville were obtained by electrolysis, and that he turned back to the use of the alkaline metals solely because the use of the battery to effect the decomposition was far too costly to be followed industrially. This fact still holds true, and we cannot help supposing that if Deville had had dynamos at his command such as we have at present, the time of his death might have seen the aluminium industry far ahead of where it now is.

First in point of time we notice Grätzel's process, patented in Germany in 1883 and used industrially by the "Aluminium and Magnesium Fabrik, Patent Grätzel," at Hemelingen, near Bremen. The process was essentially the electrolysis of a bath of a fused aluminium salt, such as chloride or fluoride, the improvements on the older experiments being in details of apparatus used, the use especially of anodes of mixed carbon and alumina, and the use of dynamic electricity. Several metallurgists maintained the uselessness of the Grätzel processes, and their position was proved to be not far from the truth, for in October, 1887, the company announced that the addition "Pt. Grätzel" would be dropped from the firm name, since they had abandoned Grätzel's processes and were making aluminium by methods devised by Herr Saarburger, director of their works.

The processes of this latter gentleman not being published, we are unable to state their nature, but they were very probably electrolytic. In October, 1888, Mr. Saarburger reported that their works were producing at the rate of 12,000 kilos of aluminium yearly, besides a large quantity of aluminium bronze and ferro-aluminium. The firm also worked up the aluminium and its alloys into sheet, wire, tube, etc.

Since 1890, however, this company has retired from the aluminium business, their works being now used only for the production of magnesium.

A somewhat similar electrolytic process was patented by Dr. Ed. Kleiner, of Zurich, in 1886. Molten cryolite was decomposed by two carbon poles, the heat generated by the current first melting the cryolite and then electrolyzing it. Since the motive power in this, as in all electric processes, composes one of the chief elements for carrying on the reduction, the Kleiner Gesellschaft, formed to work this method, made an attempt to obtain water rights at the falls of the Rhine, at Schaffhausen, which would furnish 15,000 horse-power. This proposition being refused by the government, an experimental plant was started at the Hope Mills, Tyddesley, Lancashire, England. The results were not encouraging enough to allow of commercial success, and the process was abandoned.

An electrolytic method, different in principle from both the preceding, is the invention of Mr. Chas. M. Hall, of Oberlin, Ohio, which was patented in the United States in April, 1889, but applied for in 1886. The principle involved is the electric decomposition of alumina, dissolved in a fused bath of the fluorides of aluminium and other bases, the current reducing the dissolved alumina without affecting the solvent. This method is essentially different from any of the previous electrical processes, which contemplated and operated simply the decomposition of a molten aluminium salt, such, for instance, as the *solvent* used by Mr. Hall. The knowledge that the fused fluorides dissolve large quantities of alumina, and that the electric current will act on this dissolved alumina without decom-

posing the solvent, was the essence of Hall's invention, and the source of another revolution in the aluminium industry. The process has been operated by the Pittsburgh Reduction Company, from 1889 to 1891, in Pittsburgh, Pa., since 1891 at New Kensington, Pa., on the banks of the Allegheny river, eighteen miles above Pittsburgh. During 1889 this company produced about 75 pounds of aluminium a day, which they sold at $4.50 per pound; in 1890 their capacity was increased to 400 pounds per day, and the selling price reduced to $2.00 per pound; since 1892 the works have been again enlarged to a capacity of nearly one ton per day, and the selling price has tended steadily downwards until it is at present $0.50 per pound. During 1895 this company expects to put into operation a very large new plant at Niagara Falls, using power generated by the new tunnel. This works will utilize up to 6,000 horse-power, and will have a capacity when in full operation of 6,000 to 8,000 pounds per day. This improvement will place the United States in the front as the largest aluminium-producing country in the world.

In France, Adolphe Minet, a well-known electrician, experimented during 1887 and 1888 on the electrolysis of a molten bath containing aluminium fluoride and sodium chloride, fed by the addition of alumina and aluminium fluoride. From 1888 to 1891 this process was run on an experimental scale at the works of Bernard Bros., at Creil, making about 35 pounds of aluminium per day. In 1890 a larger plant was put up, run by water power, at Saint Michel, Savoy, having a much larger capacity, which it is stated had been increased in 1894 to 1,000 pounds per day. In 1895, this plant has been acquired by a French company who will operate by the Hall process.

While the electrolytic processes so far considered use a fluid bath, and operate at moderate temperatures with a current of moderate intensity, there have been devised two other prominent processes which operate in a somewhat different manner and attain to economical results. These primarily depend on the enormous temperature attainable by the use of a powerful

electric arc, and secondarily on the reduction of alumina (which at the temperature attained becomes fluid) either by the reducing action of the carbon present or by simple electric decomposition. Which of these two agencies performs the reduction, in either process, is still an unsettled question, which we will discuss later on.

Before going further with the history of these two processes, Cowles' and Heroult's, it may not be inappropriate to take note of a few facts antecedent to their appearance. It is well known that Sir W. Siemens devised an electric furnace in which the heat of the arc was utilized for melting steel. In 1882 Mr. Ludwig Grabau, in Hanover, Germany, purchased a Siemens furnace for the express purpose of attempting the reduction of alumina, and after experimenting successfully for some time, modified the apparatus so as to work it continuously, and therewith made aluminium alloys; but on account of the difficulties of the process, and the impurity of the alloys produced, Mr. Grabau gave up the experiments, having come to the conclusion that aluminium alloys to be technically valuable should be obtained in a state of almost chemical purity. In the beginning of 1885 Dr. Mierzinski, in his book on aluminium, presented some very striking remarks on the use of the electric furnace, which are so much to the point that they are well worth quoting in this connection: "The application of electricity for producing metals possesses the advantage not to be ignored that a degree of heat may be attained with it such as cannot be reached by a blowpipe or regenerative gas-furnace. The highest furnace temperature attainable is 2500 to 2800° C., but long before this point is reached the combustion becomes so languid that the loss of head by radiation almost equals the production of heat by combustion, and hinders a further elevation of temperature. But in applying electricity the degree of heat attainable is theoretically unlimited. A further advantage is that the smelting takes place in a perfectly neutral atmosphere, the whole operation going on without much preparation, and under the eyes of the operator. Finally, in ordinary furnaces, the refractory

material of the vessel must stand a higher heat than the substance in it, whereas by smelting in an electric furnace the material to be fused has a higher temperature than the crucible itself. Since the attempt to produce aluminium by the direct reduction of alumina by carbon is considered by metallurgists as impossible, because the temperature requisite is not attainable, the use of the electric current for attaining this end seems to be of so much the more importance."

The Cowles invention was patented August 18, 1885, and was first publicly described before the American Association for the Advancement of Science, at their Ann Arbor meeting, August 28, 1885. The process is due to two Cleveland gentlemen, E. H. and A. H. Cowles, who in the development of their process associated with them Prof. Charles F. Mabery, of the Case School of Applied Science, Cleveland, as consulting chemist. The Cowles Electric Smelting and Aluminium Company, formed to work the process, erected a plant at Lockport, N. Y., where a water power of 1200 horse-power was secured, and where, among other novel apparatus, the largest dynamo in the world, made especially for this purpose by the Brush Electric Company, was in operation. Following the success of this plant in America, the Cowles Syndicate Company, organized to work the patents in England, put in operation works at Stoke-on-Trent which had a capacity of something like 300 lbs. of alloyed aluminium daily. Springing also from the Cowles process is the "Aluminium Brass and Bronze Company," of Bridgeport, Conn., which was organized in July, 1887, and controls the exclusive rights under the Cowles American patents of manufacturing the alloys of aluminium into sheet, rods, and wire. The extensive plant of this company employs 300 men, and has been erected at a cost of nearly $300,000.

The principle made use of in the Cowles process is, briefly, that a powerful electric current is interrupted, the terminals being large carbon rods, and the space between having been filled with a mixture of alumina, carbon, and the metal to be

alloyed, the intense heat generated in contact with this mixture causes the metal to melt and the alumina to be reduced to aluminium, which combines with the metal, while the oxygen escapes as carbonic oxide.

It is interesting to note as separating the Cowles, as well as the Heroult, process from the previously-mentioned electrolytic methods, that while the latter produce almost exclusively pure aluminium in their electric operation, finding it inexpedient, if not perhaps impossible, to add other metals and form alloys at once—the former experience almost the reverse of these conditions, and as yet are confined exclusively to the direct production of the alloys.

The Heroult process was first put in practical operation on July 30th, 1888, at the works of the Swiss Metallurgic Company (Société Metallurgique Suisse), at Neuhausen, near Schaffhausen. The patents for the process were granted in France and England in April and May, 1887, and in the United States in August, 1888. The company named above is composed of some of the largest metal-workers in Switzerland. Previously to their adoption of this process they had experimented with Dr. Kleiner's electrolytic method, but abandoned it, and on becoming the owners of the Heroult process imme diately started it up practically on a large scale, and with signal success.

The process consists in electrolyzing molten alumina which has been rendered fluid by the heat of the arc, using as the positive anode a large prism of hard carbon and as the negative a substratum of molten copper or iron, the arrangement of the parts being such that the process seems to proceed, when once well under way, in all respects as the simple electrolysis of a liquid. Using water power for driving the dynamos, the economical production of alloyed aluminium at 4.5 francs per kilo (50 cents per pound), was an assured fact.

The success of this process at Neuhausen was so marked as to attract general attention, and in the latter months of 1888 several large German corporations, prominent among which was

the Allgemeine Electricitäts Gesellschaft of Berlin, sent representatives to arrange for the purchase of the Heroult patents for Germany. The outcome of these examinations and negotiations was the purchase by this German Syndicate of Heroult's continental patents and the founding by them and the former Swiss owners of the Aluminium Industrie Actien-Gesellschaft, with a capital of 10,000,000 francs. In December, 1888, the new company took possession at Neuhausen, and commenced the construction of a plant many times larger than the original one, their plans also including the erection of foundries and mills for casting and manufacturing their alloys. Dr. Kiliani, the well-known writer on electro-metallurgical subjects, was working manager for the company.* The new plant utilized 3000 horse power, and had a capacity of 3000 pounds of alloyed aluminium daily.

In the same year, the Société Electro-Metallurgique Francaise established a works at Froges (Isère) 12 miles from Grenoble, to work the Heroult process, with Kiliani's modifications. They used 400 horse-power, which later was enlarged to 800, and in 1894 acquired a large water power at La Praz, near Modane, where works have been erected and lately put into operation.

The process now used here and in Switzerland is not the original Heroult process as previously described. Dr. Kiliani introduced some modifications in the apparatus, but no pure aluminum was made by either of the Heroult works until the end of 1889, when there was begun the use of cryolite in the furnace to reduce the melting point of the alumina and the electrical tension required to operate it. As thus modified, the process is essentially identical in principle with Hall's process; in fact, the U. S. Patent office refused Heroult's application for a patent on account of Hall's priority to the process. An attempt was made in 1889 to work the Heroult alloy process in the United States, an experimental plant being started at

* Dr. Kiliani died suddenly in January, 1895, in the midst of his duties.

Bridgeport, Conn., in August of that year, but it was stopped by the burning out of the dynamo. In 1890 another dynamo arrived from the Oerlikon works, at Zurich, and the process was operated for some time on an experimental scale at Boonton, N. J., but was abandoned in 1891.

During the years 1885 to 1890 both the Cowles and Heroult alloy processes were successful in producing aluminium in alloys at a lower cost than the market price of pure aluminium, and therefore built up a considerable business. Since pure aluminium has reached so low a price, metal mixers prefer to make their own alloys from the pure metal, and the ready-made alloys have lost their market.

The Alliance Aluminium Company of London, England, was organized in the early part of 1888, with a nominal capital of £500,000. This company owned the English, German, French, and Belgian patents of Prof. Netto, of Dresden, for the manufacture of sodium and potassium and the reduction of cryolite thereby; the patents of Mr. Cunningham for methods of reduction of the same metals; and methods devised by Prof. Netto and Dr. Saloman, of Essen, for producing aluminium of great purity on a commercial scale. The two latter named gentlemen are said to have invented their processes after long experimenting at Krupp's works at Essen; and, since the apparatus used was mounted on trunnions, many rumors were spread by the newspapers that aluminum was being made (by tons, of course) in a Bessemer converter by Krupp, of Essen. Prof. Netto reduced sodium by a continuous process, by allowing fused caustic soda to trickle over incandescent charcoal in a vertical retort, the apparatus containing many ingenious details and giving promise of being quite economical. One method of using the sodium in reduction consisted in the use of a plunger to which bars of sodium were attached and held at the bottom of a crucible full of molten cryolite; another depended on the use of a revolving cylinder in which the cryolite and sodium reacted, and appears more chimerical than Netto's other propositions. This latter device, however, is said to have been operated at Essen.

In June, 1888, the Alliance Company were located at King's Head Yard, London, E. C., and several small reduction furnaces were being operated, each producing about 50 lbs. of aluminium a day, estimates of the cost at which it was made giving 6 to 8 shillings per pound. In the early part of 1889 the "Alkali Reduction Syndicate, Limited," leased ground at Hepburn on which to erect works for making sodium by Cunningham's patents, the sodium produced being sent to Wallsend, near Newcastle-on-Tyne, where the Alliance Company's reduction works were located.

In 1890 this company could not profitably compete with the electrolytic processes, and in 1892 their works were sold at auction.

Ludwig Grabau, of Hanover, Germany, has made several patented improvements in producing aluminium, which are in the same direction as Prof. Netto's methods. Mr. Grabau believes that in order that aluminium may possess its most valuable qualities, either for use alone or in alloying, it should be of almost chemical purity, and as the best means of attaining this end economically he has improved the sodium method on these three lines:—

1st. Production of cheap pure aluminium fluoride.

2d. Production of cheap sodium.

3d. Reduction in such a manner that no possible impurities can enter the reduced metal, and that the sodium is completely utilized.

Mr. Grabau has devised processes for making pure aluminium fluoride from kaolin, sodium by electrolysis of fused salt, and has succeeded in producing some very pure aluminium, but not cheaply enough to compete with the Hall and Heroult processes.

Col. William Frishmuth, of Philadelphia, operated a small chemical works, and before 1860 made sodium by Deville's process, and with it made aluminium in small quantities. He claimed to have other methods of producing aluminium cheaply, but none of them were practicable. He deserves credit for hav-

ing made a good casting of the aluminium tip on the Washing-ing Monument at our national capital.

In 1889 the aluminium industry was finely represented at the Paris Exposition. It was the period in which the sodium processes were at their culmination, and the electrical processes just becoming serious competitors. A detailed account of the exhibits reads as follows:

Société Anonyme pour l'Industrie de l'Aluminium: In a large case, the frame of which was aluminium bronze, samples of aluminium, ferro-aluminium, aluminium bronze, forged and rolled, and numerous articles of the latter alloy. Cowles Electric Smelting and Aluminium Company: Samples of ferro-aluuminium, aluminium bronze and aluminium brass of various grades, aluminium silver, and numerous useful articles made of these alloys. Brin Bros.: Samples of aluminium with thin iron and steel castings made by its use. The Alliance Aluminium Company: Two large blocks of aluminium, cast hollow, weighing possibly 1,000 pounds and 500 pounds, respectively. The inclosing balustrade and decorations were principally of aluminium or aluminium bronze. The Aluminium Company, Limited: A solid casting of aluminium bronze weighing ½ ton, and on this a solid block of 98 per cent. aluminium weighing the same. In the corners of the case piles of ingots of 99 per cent. aluminium, 10 per cent. bronze, 5 per cent. bronze, 10 per cent. ferro-aluminium, and 20 per cent. aluminium steel. Besides which were a 7-inch bell, springs, statues, aluminium plate, round and square tubes, wire, sheet, etc. Such were the aluminium exhibits, which attracted as much interest as the historic ingot of 1855 did at its début, and, not taking into account that Mr. Hall's process was not represented and that the German makers were debarred from exhibiting because of international pique, yet the exhibit shown was one which demonstrated the great advances made in the previous five years.

Since 1890, the progress of the aluminium industry has been steady but sure. The sodium processes have dropped altogether from the race, and the electrical processes occupy the

field. Among these, the processes producing alloys only have dropped out of sight. Among those that remain, only those favorably situated, near abundant water power and with cheap supplies of alumina, have flourished. The industry has reached a strict commercial basis, in which every cent of cost has to be considered, and every item of expense reduced to a minimum.

In 1890 the Cowles Electric Smelting and Aluminium Company began selling pure aluminium. They were sued by the Pittsburgh Reduction Company for infringement of the Hall patents, and in the early part of 1893 were enjoined by the courts from continuing their pure-metal process, it being declared an infringement of Hall's patents.

Mention should be made of the aluminium exhibit at the Columbian Exposition in Chicago, 1893. The only makers represented were the Pittsburgh Reduction Company, but their exhibit was a very satisfactory representation of the state of the art. A working model of an extraction pot was shown, hundreds of pounds of the metal in all shapes and worked in every way, a fine set of aluminium alloys, and several cases of manufactured goods made from their metal by various American firms. Mr. Hirsh of Chicago showed aluminium electroplated on other metals and on wood. The writer exhibited a metallurgical suite showing the minerals from which aluminium is extracted, samples of aluminium made by the various processes which have been used, samples showing the physical properties of the metal, its working, soldering, etc., and a large number of its alloys.

The statistics about to be given will show graphically the story of the rise of the aluminium industry. The last ten years have witnessed an undreamt-of progress. Hereafter the lowering in price can only be counted at a few cents a pound, but the increase of production may be noted in thousands of tons. A most fitting ending to this historical sketch would be simply to repeat what I wrote three years ago, viz., "The nineteenth century will live in history as that century which gave to the world the railway, the telegraph, the telephone, the dynamo, Bessemer steel and aluminium."

STATISTICAL.

The following table shows the price at which aluminium has been sold since it was first placed on the market:

Date.	Place.	Per kilo.	Per pound.
1856 (Spring)	Paris	1000 fr.	$90.90
1856 (August)	"	300 "	27.27
1859	"	200 "	17.27
1862	"	130 "	11.75
1862	Newcastle.		11.75
1878	Paris	130 "	11.75
1886	"		12.00
1887	Bremen		8.00
1888	London.		4.84
1889	Pittsburgh.		2.00
1891	"		1.50
1892	"		1.00
1893	"		0.75
1894	"		0.50
1895	Switzerland	3 M.	0.35

Until 1885 the selling price of aluminium bronze depended directly on the price of aluminium, being about $1.50 per pound for the ten per cent. alloy. With the advent of the Cowles and, later, the Heroult alloy-processes, the price fell below what the contained aluminium would have cost, as is shown by the selling price of the ten per cent. bronze, as follows:

Date.	Place.	Per kilo.	Per pound.
1878	Paris.	18.00 fr.	$1.64
1885	Cowles Bros.	4.50 "	0.40
1888	" "	3.85 "	0.35
1888	Heroult process, Neuhausen	3.30 "	0.30

Since 1889 the cost of the bronze has again been dependent on the cost of the pure metal, so that no separate figures are necessary, With copper at $0.10 per pound, and aluminium at $0.50, the cost of 10 per cent. bronze is not over $0.20 per pound.

As to the amount of aluminium which has been produced,

we can make the following estimates, gleaned from various sources:

FRANCE.

		Kilos.
1854–56	Deville	25
1859	Nanterre (Deville)	720
1859	Rouen (Tissier Bros.)	960
1865	France	1,090
1869	"	455
1872	Salindres (H. Merle & Co.)	1,800
1882	" " "	2,350
1884	" " "	2,400
1887	France	3,500
1888	"	4,500
1889	"	14,840
1890	"	37,000
1891	"	36,000
1892	"	40,000

A careful estimate of the total amount made in France by the Deville process, from 1855 to 1888, places it at 43,000 kilos. Since 1888, there has been made by other processes 128,000 kilos up to the year 1893, making a total of 171,000 kilos, or 375,000 pounds.

ENGLAND.

		Pounds.
1872	Bell Bros	1,650
1889	Castner process	50,000
1891	Electrolytic processes	90,000
1892	" "	90,000

The total English production up to 1890 was probably not over 70,000 pounds, The Castner process produced altogether from July, 1888 to 1891, 250,000 pounds. The total produced in England to the end of 1892 is therefore in the neighborhood of 450,000 pounds.

SWITZERLAND.

		Kilos.
1890	Neuhausen	40,540
1891	"	168,670
1892	"	300,000
1893	"	480,000
1894	"	600,000

The total production of these works to the end of 1894 was over 1,500,000 kilos, or 3,300,000 pounds.

UNITED STATES.

		Pounds.
1883	Frishmuth	70
1884	"	125
1885	"	230
1885	Cowles Bros. (in alloys)	450
1886	" "	6,500
1887	" "	17,800
1888	Pure and alloyed	19,000
1889	"	47,468
1890	"	61,281
1891	"	150,000
1892	"	259,885
1893	"	333,629
1894	"	706,000

WORLD'S PRODUCTION TO END OF 1892.

	Kilos.	Pounds.
France	171,000	376,000
England	204,500	450,000
Switzerland	500,000	1,100,000
Germany (1885–1889)	50,000	110,000
United States	250,000	550,000
Total	1,175,500	2,586,000

The amount made in 1893 was as follows:

France (estimated)	40,000 kilos.	
Switzerland	480,000 "	
United States	150,000 "	
Total	670,000 "	= 1,474,000 pounds.

An estimate for 1894 would be as follows:

France	100,000 kilos.	
Switzerland	600,000 "	
United States	320,000 "	
Total	1,020,000 "	= 2,244,000 pounds.

The total amount of aluminium made from 1855 to the be-

ginning of 1895 is, therefore, in the neighborhood of 2,865,500 kilos, or 6,304,000 pounds, while the annual production has reached 1,000 long tons, and will probably be increased during 1895 to nearly 2,000 tons.

In comparing these figures with the production of other metals, it is important to bear in mind the low specific gravity of aluminium. For most practical applications, the bulk of the metal used is a fixed quantity, and 1,000 tons of aluminium are equal in volume to

4,600	tons	of	lead.
4,000	"	"	silver.
3,500	"	"	nickel.
3,300	"	"	copper.
2,800	"	"	tin.
2,700	"	"	zinc.

CHAPTER II.

OCCURRENCE OF ALUMINIUM IN NATURE.

THERE is no other useful metal, iron not excepted, which is so widely scattered over the earth and occurs in such abundance. F. W. Clarke of the Smithsonian Institution has calculated that the percentage of aluminium in the earth's crust, as far as it is known to us, is 7.81, while that of iron, the next most abundant element, is 5.46.

Aluminium is not found metallic. Stocker * made the statement that aluminium occurred as shining scales in an alumina formation at St. Austel, near Cornwall, but he was in error. But the combinations of aluminium with oxygen, the alkalies, fluorine, silicon, and the acids, etc., are so numerous and occur so abundantly as not only to form mountain masses, but to be also the bases of soils and clays. Especially numerous are the combinations with silicon and other bases, which, in the form of feldspar and mica, mixed with quartz, form granite.

These combinations, by the influence of the atmospheric air and water, are decomposed, the alkali is replaced or carried away, and the residues form clays. The clays form soils, and thus the surface of the earth becomes porous to water and fruitful. It is a curious fact that aluminium is rarely found in animals or plants. According to Church,† alumina is found only in a few vascular cryptogamous plants, whose ash contains up to 20 per cent.

Ricciardi concluded from numerous experiments that the assimilation of alumina by plants does not depend upon the abundance of alumina in the soil, and that, generally speaking,

* Journ. fr. prakt. Chem., 66, 470.

† Proc. Royal Society, Vol. 44, p. 121.

there is more found in the trunk and branches, less in the husks and seeds, and least in the leaves.

Most of the aluminium compounds appear dull and disagreeable, such as feldspar, mica, pigments, gneiss, amphibole, porphyry, eurite, trachyte, etc.; yet there are others possessing extraordinary lustre, and so beautiful as to be classed as precious stones. Some of these, with their formulæ, are:

Ruby	Al_2O_3
Sapphire	Al_2O_3
Garnet	$(Ca.Mg.Fe.Mn)_3Al_2Si_3O_{12}$
Cyanite	Al_2SiO_5

Some other compounds occurring frequently are:

Turquoise	$Al_2P_2O_8.H_6Al_2O_6.2H_2O$
Lazulite	$(MgFe)Al_2P_2O_9 + Aq$
Wavellite	$2Al_2P_2O_8.H_6Al_2O_6.9H_2O$
Topaz	$5Al_2SiO_5.Al_2SiF_{10}$
Cryolite	$Al_2F_6.6NaF$
Diaspore	$Al_2O_3.H_2O$
Bauxite	$Al_2O_3.2H_2O$
Aluminite	$Al_2SO_6.9H_2O$
Alunite	$K_2SO_4.Al_2S_3O_{12}.2H_2Al_2O_6$
Soda Feldspar	$Na_2Al_2Si_6O_{16}$
Potash Feldspar	$K_2Al_2Si_6O_{16}$
Lime Feldspar	$CaAl_2Si_2O_8$
Kaolin	$Al_2Si_2O_7.2H_2O$

Bauxite and cryolite are the minerals most used for producing aluminium, and their preference lies mainly in their purity. Native alums generally occur in out-of-the-way places and not in beds of very large extent.

BAUXITE.

Bauxite is a hydrous aluminium oxide of variable composition, sometimes approaching diaspore in its proportion of water, but with the aluminium always more or less replaced by iron, and some silica disseminated through it. Its color is creamy white when free from iron, and its structure usually pisolitic, that is, in small globules like peas. It was first found in

France, near the town of Baux, large deposits occurring in the departments of Var and Bouches du Rhon, extending from Tarascon to Antibes. Several of these beds are a dozen yards thick, and sixteen kilometers in length. Deposits are also found in the departments of l'Herault and l'Arriège. Very important beds are found in Styria, at Wochein, and at Freisstritz, in Austria, a newly discovered locality where the mineral is called Wocheinite. Here it has a dense, earthy structure, while that of France is conglomerate or oölitic. Deposits similar to those of France are found in Ireland at Irish Hill, Straid, and Glenravel. Further deposits are found in Hadamar in Hesse, at Klein Steinheim, Langsdorff, and in French Guiana.

In the United States large beds have been found in Alabama, Georgia, and Arkansas. Those of Georgia have been worked since 1890, and are now affording a large part of all the bauxite consumed in this country. The deposits of the Coosa Valley in Georgia and Alabama are worked by three companies, the Republic Mining and Manufacturing Company, the Georgia Bauxite and Mining Company, and the Southern Bauxite Mining and Manufacturing Company. These three companies produced, in 1893, 9,200 tons, which was three-fifths of the total bauxite consumed in the United States, the rest being imported from Ireland. The ore is found in beds or pockets, and while the quantity in sight is not inexhaustible, yet there is sufficient for many years to come, at the present rate of mining. These bauxites are as pure as those of Europe, and the manufacturers using them say they are more easily worked and so prefer them to the imported, even though they often carry less alumina and cost more. The Arkansas ore occurs in tertiary formations, in irregular deposits of 5 to 40 feet in thickness, not over 300 feet above tide water. H. L. Fletcher, of Little Rock, owns much of the land on which they occur.

The cost of imported bauxite is $5 to $7 a ton; of American bauxite $5 to 12 per long ton, according to where the

market is; best selected Georgia bauxite brings $10 per ton in New York city.

The following are analyses of foreign bauxites; besides the ingredients given there are also traces of lime, magnesia, sulphuric, phosphoric, titanic and vanadic acids.

	1	2	3	4	5	6
Alumina	60.0	75.0	63.16	72.87	44.4	54.1
Ferric oxide	25.0	12.0	23.55	13.49	30.3	10.4
Silica	3.0	1.0	4.15	4.25	15.0	12.0
Alkalies	—	—	0.79	0.78	—	—
Water	12.0	12.0	8.34	8.50	9.7	29.9

	7	8	9	10	11	12
Alumina	64.6	29.80	48.12	43.44	61.89	45.76
Ferric oxide	2.0	3.67	2.36	2.11	1.96	18.96
Silica	7.5	44.76	7.95	15.05	6.01	6.41
Alkalies	—	—	—	—	—	0.38
Water	24.7	13.86	40.33	35.70	27.82	27.61

	13	14	15	16	17
Alumina	55.61	76.3	50.85	49.02	73.00
Ferric oxide	7.17	6.2	14.36	12.90	4.26
Silica	4.41	11.0	5.14	10.27	2.15
Alkalies	—	—	0.26	0.31	—
Water	32.33	26.4	28.38	25.91	18.66

Index:—

1 and 2. From Baux (Deville).
3. Dark } Wocheinite (Drechsler).
4. Light }
5. Red brown }
6. Yellow } Bauxite from Freisstritz (Schnitzer).
7. White }
8. White Wocheinite (L. Mayer and O. Wagner).
9. Bauxite from Irish Hill.

10. Bauxite from Co. Antrim (Spruce).
11. " " Glenravel (F. Hodges).
12 and 13. " " Hadamar in Hesse (Retzlaff).
14. From Klein-Steinheim (Bischof).
15 and 16. From Langsdorff (I. Lang).
17. Bauxite from Dublin, Ireland, brought to the Laurel Hill Chemical Works, Brooklyn, L. I., and there used for making alums. It is dirty white, hard, dense, compact, and in addition to the ingredients given above contains 0.59 per cent. of lime and some titanic acid. It costs $6 per ton laid down in the works. The above analysis, made by Mr. Joüet, is furnished me by the kindness of the superintendent of the works, Mr. Herreshoff.

The American bauxites are fully equal to the foreign in quality, as is shown by the following analyses:

	18	19	20	21	22
Alumina	37.62	55.59	46.44	58.60	46.72
Ferric Oxide	1.83	6.08	22.15	9.11	2.14
Silica	11.48	10.13	4.89	3.34	29.01
Water	28.63	28.99	26.68	28.63	20.15
Titanic Acid	—	—	—	—	0.87

	23	24	25	26	27
Alumina	58.61	67.53	60.61	61.87	40.93
Ferric Oxide	2.63	trace	0.21	2.38	22.60
Silica	8.29	1.34	2.47	0.40	8.99
Water	27.42	28.00	32.00	30.50	20.43
Titanic Acid	3.15	2.92	4.18	—	—

18. Little Rock Region, Pulaski Co., Arkansas.
19. " " " " "
20. Red variety, Saline Co., Arkansas.
21. Pink " " "
22. White variety, Floyd Co., Georgia.
23. " " " "
24. Georgia Bauxite Company.
25. " " "
26. Wharwhoop Mine, Cherokee Co., Alabama.
27. Red variety, Cherokee Co., Alabama.

Regarding French bauxites, Francis Laur, the first to work the French deposits, states* that one of their peculiarities is that the bulk of that mined contains a nearly constant amount of alumina, of silica, ferric oxide and water taken together, and of other impurities. The proportions are very nearly

Alumina	68 to 70	per cent.
Silica, ferric oxide and water	27	"
Other impurities	3 to 4	"

In the bauxite from Baux, that first worked, the silica, ferric oxide and water are present in about equal proportions; that is, about 8 to 10 per cent. of each. In the pale bauxite from Villeveyrac (Hérault) there is almost no iron, and the 27 per cent. is nearly evenly divided between silica and water; what small amount of ferric oxide does occur in it can be put into the list of "other impurities." The red bauxite, discovered in 1880 in the south of France, is very constant in composition, and may be regarded as the inverse of the pale variety. In this red kind the silica is so small as to be relegated to the accessory constituents, while water and ferric oxide alone make up the 27 per cent. These three varieties represent the three types of bauxite which are mined in large quantities. The pale variety, being low in iron, is preferred for making aluminium sulphate by treatment with sulphuric acid, which attacks it very readily; the red kind is preferred for the sodium carbonate treatment, as the iron does not interfere, while silica is kept out of the alumina produced. Besides these kinds, some varieties are found with the 27 per cent. either all water, all silica or all ferric oxide. We would thus have, as the composition of the typical kinds of bauxite found in France, the following:

	Water.	Silica.	Ferric oxide.
Hyaline bauxite	27	0	0
Silicious type, compact	0	27	0
Ferruginous type, in pisolites	0	0	27
Red bauxite of Var	13½	0	13½
Pale bauxite of Villeveyrac	13½	13½	0
Mixed bauxite of Baux	9	9	9

* Trans. Am. Inst. Mining Eng., Feb., 1894.

Mr. A. E. Hunt, of Pittsburgh, in the discussion of this paper, remarked that there are vast quantities of bauxite in Georgia, Alabama and Arkansas, which run low in both silica and ferric oxide, containing less than 5 per cent. of both these ingredients, but with about 4.5 per cent. of titanic acid. It is his experience that when the water of hydration is below 31 per cent., in the greyish and white bauxite from Georgia and Alabama, the silica is always high. If the bauxite is red, however, the water may be low without the silica being high. He cites the following analyses illustrating this point:

Combined water.	Silica.	Ferric oxide.	Titanic acid.	Alumina.
33.43	0.80	0.47	4.20	61.10
32.00	2.66	0.47	4.06	60.81
20.93	22.96	0.47	4.72	51.14
16.70	32.03	0.71	3.76	47.03
18.20	3.10	17.30	3.90	57.00

It will be seen that Mr. Laur's generalizations regarding French bauxites do not hold good for the American varieties; the constancy of the titanic acid is also remarkable.

CRYOLITE.

Cryolite was first found at Ivigtuk in Arksut-fiord, west coast of Greenland, where it constitutes a large bed or vein in gneiss. It was very rare even in mineralogical collections until 1855, when several tons were carried to Copenhagen and sold under the name of "soda mineral." It is a semi-transparent, snow-white mineral. When impure it is yellowish or reddish, even sometimes almost black. It is shining, sp. gr. 2.95, and hardness 2.5 to 3. It is brittle, not infrequently contains ferrous carbonate, sulphide of lead, silica, and sometimes columbite. It is fusible in the flame of a candle, and on treatment with sulphuric acid yields hydrofluoric acid. As will be seen further on, cryolite was first used by the soap-makers for its soda; it is still used for making soda and alumina salts, and to make a white glass which is a very good imitation of porcelain. The Pennsylvania Salt Company in Philadelphia import it from

Ivigtuk by the ship-load for these purposes; lately they have discontinued making the glass. Cryolite is in general use as a flux. A very complete description of the deposit at Ivigtuk can be found in Hoffman's "Chemische Industrie."

Pure cryolite contains

Aluminium	13.0
Fluorine	54.5
Sodium	32.5
	100.00

Or otherwise stated,

Aluminium fluoride	40.25
Sodium fluoride	59.75
	100.00

From the reports in the Mineral Resources of the United States we find that there was imported by the Pennsylvania Salt Company in 1892, 8000 long tons, which was valued at $9 a ton. The importers say this value is too low; they sell what they call pure prepared cryolite at $60 a ton. This so called pure article was found by Prof. Rogers, of Milwaukee, to contain two per cent. of silica and one per cent. of iron; in fact, the whitest cryolite always contains silica microscopically disseminated through it, which cannot be separated out by any means.

The only known deposit of cryolite in the United States is that found near Pike's Peak, Colorado, and described by W. Cross and W. F. Hillebrand in the "American Journal of Science," October, 1883. It is purely of mineralogical importance and interest, occurring in small masses as a subordinate constituent in certain quartz and feldspar veins in a country rock of coarse reddish granite. In composition, however, it is practically identical with the Greenland cryolite, so that the following analysis by Mr. Hillebrand will stand for a typical analysis of cryolite as found in nature:

Fluorine	53.55	per cent.
Aluminium	12.81	"
Sodium	32.40	"
Ferric Oxide	0.40	"
Lime	0.28	"
Water	0.30	"

CORUNDUM.

Until 1869 the sole sources of corundum were a few river washings in India and elsewhere, where it was found in scattered crystals. Its cost was twelve to twenty-five cents a pound. Within the last twenty years numerous mines have been opened in the eastern United States, the first discovery of which was due to Mr. W. P. Thompson, and is thus described by him:*

"In 1869, in riding over a spur of the Alleghenies in northern Georgia, I found what has proven to be an almost inexhaustible mine of corundum in the chrysolite serpentine, the first instance on record of the mineral being found *in situ*. Previously it had been washed out of débris at Cripp's Hill, N. C., and at a mine in West Chester, Pa., both on the slopes of the chrysolite serpentine. The clue being thus obtained accidentally, about thirty mines were shortly afterwards discovered in the same formation; but of the thousands of tons thus far dug out, the larger portion has come from the mines I discovered.

"At present it can be bought at about ten dollars per ton at the mines. It is nearly pure alumina. Disapore, a hydrated alumina, is also found in the same region and locality. Corundum will probably always be the principal source in America of material from which to manufacture pure aluminium; but in Great Britain, in all probability, manufacturers must look to alumina prepared artificially from cryolite or from sulphate of alumina."

In 1892 the production of corundum in the United States was somewhat over 2000 short tons, valued at $40 a ton when sifted and broken to proper sizes for the market, the Hamp-

* Journal of the Society of Chemical Induustry, April, 1886.

den Emery Company, at Laurel Creek, Ga., and at Corundum Hill, N. C., and the Unionville Corundum Mines Company, at Unionville, Chester Co., Pa., being the principal producers. Thus, while corundum may be worth in bulk at the mines only $10 a ton, yet it is extremely hard to crush, and when broken up fine is worth far more as an abrasive than as an aluminium ore. The present large development of bauxite mining has completely nullified the use of corundum as a source of aluminium, and I do not suppose that at present a single pound of aluminium is being made from it.

KAOLIN.

The mineral kaolin is variously known as white china clay, fuller's-earth, or pure white clay. It is essentially a hydrated silicate of aluminium, containing when pure

Alumina	39.8	per cent.
Silica	46.3	"
Water	13.9	"

Its chemical formula is $Al_2O_3.2SiO_2.2H_2O$. If the water is driven off by calcination, the residue contains 46.2 per cent. of alumina, or 24.4 per cent. of aluminium.

Kaolin has been formed mostly by the atmospheric decomposition of feldspar, the alkalies of which are changed into carbonates by the carbonic acid of the rain water, and are then leached out, carrying with them part of the silica in solution, and leaving kaolin, according to the reaction,

$$K_2Al_2Si_6O_{16}+2H_2O+CO_2=Al_2Si_2O_7.2H_2O+K_2CO_3+4SiO_2.$$

Kaolin acquires a certain plasticity when mixed with water. Hydrochloric and nitric acids have no action on it, but cold sulphuric acid dissolves its alumina, setting the silica at liberty. It is infusible unless contaminated with particles of feldspar or calcium sulphate, carbonate, or phosphate. The specific gravity of kaolin is 2.3. If fused with six times its weight of caustic potash, the resulting mass gives up potassium aluminate when

washed with water, An analogous result is obtained with sodium carbonate. Grabau has prepared very pure aluminium fluoride from kaolin by the use of sulphuric acid and subsequent boiling with fluorspar.

Large deposits of kaolin are found in many parts of the world. The best locality in Europe is near Limoges, France, with which the famous Sèvres porcelain is made. Large beds are found in Cornwall and West Devon, England. In the United States the largest deposits are at Wilmington, Del., and in South Carolina, Georgia and Alabama. These deposits are worked extensively, and the product used by the pottery, paper, cotton, and various other industries. The value at the mines is very small, it not costing over $0.50 per ton to mine it, but for many purposes it must be crushed, washed, and even floated, which increases its value to $5 or $10 a ton in New York city.

The purity of kaolin, and the almost inexhaustible beds in which it occurs, stamp it as the natural ore of aluminium. All that is needed is a cheap process for separating the pure alumina from the silica, in which case no other mineral could compete with it as the main staple of the aluminium industry. This is a promising field for chemical experimenters, for such a process would be of great value.

Common clays are either very impure kaolin, or else they contain chemically a much larger proportion of silica. The percentage of silica may range from 50 per cent. up to 70 per cent, while that of the alumina present ranges downwards from 35 to 15 per cent. These common clays are far too impure and low in silica to serve as a source of aluminium, and in no case could they compete with kaolin.

Some anhydrous silicates of aluminium are found in nature, such as Disthene, Andalusite and Cyanite, whose formula is $Al_2O_3.SiO_2$, containing 62.5 per cent. of alumina; but they do not occur in large quantities, and, even if they did, are so hard and difficult to decompose that they would never be preferred to kaolin.

Native Sulphate of Alumina.

In the summer of 1884, a large deposit of rock called "native alum" was discovered on the Gila River, Socorro County, New Mexico, about two miles below the fork of the Little Gila, and four miles below the Gila Hot Springs. The deposit is said to extend over an area one mile square and to be very thick in places. The greater part of the mineral is impure, as is usual with native occurrences, but it is thought that large quantities are available. A company formed in Socorro has taken up the alum-bearing ground. Through the kindness of Mr. W. B. Spear, of Philadelphia, the author was enabled to get a specimen of the mineral.

It is white, with a yellowish tinge. On close examination it is seen to consist of layers of white, pure-looking material arranged with a fibrous appearance at right angles to the lamination. These layers are about one-quarter of an inch thick. Separating them are thin layers of a material which is deeper yellow, harder and more compact. The whole lump breaks easily, and has a strong alum taste. On investigation, the fibrous material was found to be hydrated sulphate of alumina, the harder material sulphate of lime. Analysis showed 7 to 8 per cent. of insoluble material, the remainder corresponding to the formula $Al_2(SO_4)_3.18H_2O$. A small amount of iron was present.

State Geologist Waring informs the writer that the deposits occur only in sheltered spots protected from the rain, that the region is eruptive, and that where the trachyte rock is being decomposed by sulphuric gases and waters, the salts rise to the surface and form crusts in protected places. Often the earth contains 10 per cent. or more of the anhydrous sulphate.

A similar mineral occurs in Purgatory Valley, 12 miles east of Trinidad, Colorado.

A variety of the same mineral containing some silica was found in a stratum 25 feet thick by the Congo Coal Company, while sinking a shaft at Congo, Ohio, in 1893. An analysis of this by Dr. Lisle, of Springfield, Ohio, gave

Alumina	50.16	per cent.
Silica	28.98	"
Lime	0.46	"
Sulphuric acid	16.21	"
Water	4.28	"

These minerals would appear to offer a cheap source of alumina, as the operations necessary for treating them are very simple, being solution in warm water, filtration, evaporation, and roasting. The excessive freight charges are against the New Mexico and Colorado deposits, but that in Ohio should be of considerable economic importance if the reports concerning its extent are verified.

CHAPTER III.

PHYSICAL PROPERTIES OF ALUMINIUM.

COMMERCIAL aluminium is never chemically pure, and therefore displays properties varying more or less from those of the pure metal according to the character and amount of impurities present. In this treatise, whenever the properties of aluminium are mentioned, they must be understood to refer to the chemically pure metal, and not to the commercial article, unless specifically stated.

The impurities most frequently present in commereial aluminium are iron and silicon. These are found in all brands, varying in amount from 1 per cent. in the purest to 6 and even 8 per cent. in the worst. Besides these, various other impurities are found coming from accidental sources in the manufacture; thus, some of the first metal made by Deville contained a large amount of copper (Analysis 1), coming from boats of that metal which he used in his experiments. Metal made later by Deville contained zinc, coming from zinc muffles which he had borrowed and used for retorts, old retorts broken up having been used in the composition of the new ones. More recently, aluminium has been produced by the agency of sodium in the presence of lead, which latter it takes up in small amount. Sodium is liable to remain alloyed in very small proportion, yet it is an element so easily attacked that it destroys some of the most valuable qualities of the aluminium. The distinct effect, however, of each of these usual impurities in modifying the physical properties of aluminium has not yet been investigated in a thoroughly satisfactory manner. A few years more, however, of increasing familiarity with and handling of the metal on a large commercial scale will, I believe,

cause the effect of foreign elements on aluminium to be as plainly recognized as is now the case with carbon and the metalloids in iron. In general, we may say that silicon seems to play a rôle in aluminium closely analogous to that of carbon in iron; the purest aluminium is fibrous and tough, but a small percentage of silicon makes it crystalline and brittle. Furthermore, a considerable proportion occurs in the graphitoidal state, and may be separately estimated as graphitoidal silicon by dissolving the metal in dilute hydrochloric acid in the presence of bromine water. A small amount of silicon, however, gives pure aluminium a bluish cast, a disagreeable smell, and greatly lessens its resistance to corroding agents. A small proportion of iron makes the metal denser and stronger, but a quantity above 1 per cent. quickly makes it brittle. A small quantity of copper whitens aluminium, makes it much stronger and lessens its shrinkage in casting, but with over 5 per cent. it becomes brittle.

As aluminium was made by the sodium processes, it contained as impurity about equal quantities of iron and silicon; as made by the electrolytic processes, the iron present is usually much less than the silicon. Carbon can only exist in aluminium that has been subjected to an intense heat, such as in an electric furnace, when it may be absorbed in small quantity, and makes the metal brittle; it does not occur, however, in ordinary commercial aluminium. Titanium may occur in aluminium made from raw bauxite, which frequently contains titanic oxide; its presence in small amount makes the metal much stronger, but gives it a bluish tint. There is needed a systematic investigation of the effect of small amounts of impurities on the physical and chemical properties of pure aluminium.

The following analyses are of considerable historic interest as showing incidentally the improvement which has been made in the quality of the commercial metal since the beginning of the industry:

		Aluminium.	Silicon.	Iron.
1.	Deville Process	88.350	2.87	2.40
2.	" "	92.500	0.70	6.80
3.	" "	92.000	0.45	7.55
4.	" "	92.969	2.149	4.88
5.	" "	94.700	3.70	1.60
6.	" "	96.160	0.47	3.37
7.	Tissier Bros.	94.800	4.40	0.80
8.	Morin & Co., Nanterre	97.200	0.25	2.40
9.	" "	97.000	2.70	0.30
10.	" "	98.290	0.04	1.67
11.	" "	97.680	0.12	2.20
12.	Merle & Co., Salindres	96.253	0.454	3.293
13.	" "	96.890	1.270	1.840
14.	" "	97.400	1.00	1.30
15.	" "	97.600	0.40	1.40
16.	Frishmuth	97.49	1.90	0.61
17.	"	97.75	1.70	0.55
18.	Hall's Process	98.34	1.34	0.32
19.	Deville–Castner	99.20	0.50	0.30
20.	Grabau Process	99.62	0.23	0.15
21.	" "	99.80	0.12	0.08
22.	Hall's Process	99.93	0.07	trace.

Notes on the above analyses:—

1. Analyzed by Salvêtat. Contained also 6.38 per cent. of copper and a trace of lead.

2 and 6. Analyzed by Dumas.

3. Parisian aluminium bought in La Haag.

4. Analyzed by Salvêtat. Contained also a trace of sodium.

5. Parisian aluminium bought in Bonn and analyzed by Dr. Kraut.

7. Made at the works near Rouen, in 1858, from cryolite. Analyzed by Demondèur.

8. Analyzed by Sauerwein. Contained also traces of lead and sodium.

9. Analyzed by Morin. Average of several months' work.

10, 11. Analyzed by Kraut. Represents the best product of the French works sent to the London Exhibition in 1862.

12, 13. Analyzed by Mallet. The best metal which could be bought in 1880. Purchased in Berlin by Mallet, and used by him as the material which he purified and used for determining the atomic weight of aluminium.

14, 15. Analyzed by Hampe. This was the purest metal which could be bought in 1876. No. 14 contained also 0.10 per cent. of copper and 0.20 per cent. of lead. No. 15 contained 0.40 per cent. of copper and 0.20 per cent. of lead.

16. Bought in Philadelphia as Frishmuth's aluminium, in 1885, and analyzed by the author.

17. Specimen of the metal composing the tip of the Washington Monument, cast by Frishmuth. This analysis is reported by R. L. Packard in the Mineral Resources of the United States, 1883–4.
18. The best ordinary grade of metal made by this process, analyzed by Hunt & Clapp, Pittsburgh. For average analyses, etc., see description of process.
19. The best grade made by this process, exhibited at the Paris Exposition, 1889. Analyzed by Cullen.
20. Analysis by Dr. Kraut of metal being made on a commercial scale.
21. Analysis by Grabau of the purest metal yet obtained by his process.
22. Made from chemically pure alumina, in order to determine what degree of purity was attainable by the electrolytic processes.

In addition to the above, the following analyses made in the Pittsburgh Testing Laboratory show the quality of commercial aluminium which has been put on the market in recent years:

Second Quality Metal.	Aluminium.	Combined Silicon.	Graphitoidal Silicon.	Iron.	Copper.	Sodium.	Lead.
Pittsburgh Reduction Co.	95.00	1.50	1.35	2.00	0.07	0.04	0.03
Société Anon. de l'Aluminium	95.00	0.90	1.00	3.00	0.05	0.01	0.04
Alliance Aluminium Co.	95.00	0.90	0.75	3.25	0.02	0.07	0.01
The Aluminium Co., Limited	95.00	0.85	0.75	3.00	0.10	0.30	nil
The Al. I. A. G., Switzerland	95.00	1.75	1.15	2.00	0.01	0.07	nil
" " "	94.15	1.02	0.54	2.80	1.49	—	—
First Quality Metal.							
Pittsburgh Reduction Co.	97.00	1.55	1.25	0.13	0.03	0.02	0.02
Soc. Anon. de l'Al.	97.00	0.90	0.82	1.20	0.04	0.01	0.03
Alliance Al. Co., Ltd.	97.00	0.95	0.53	1.45	0.01	0.05	0.01
The Al. Co., Limited	97.00	0.75	0.52	1.55	0.03	0.15	nil
Pittsburgh Reduction Co.	98.00	1.30	0.60	0.07	0.01	0.01	0.01
Soc. Anon. de l'Al.	98.00	0.71	0.35	0.90	0.01	0.01	0.02
Alliance Al. Co., Ltd.	98.00	0.90	0.29	0.75	0.01	0.04	0.01
The Al. Co., Limited	98.00	0.90	0.23	0.80	0.02	0.05	nil
Pittsburgh Reduction Co.	98.52	0.42	0.72	0.05	0.06	nil	0.04
" " "	99.00	0.80	0.15	0.03	0.01	nil	0.01
Soc. Anon. de l'Al.	99.00	0.35	0.13	0.50	nil	0.01	0.01
Alliance Al. Co., Ltd.	99.00	0.31	0.20	0.45	nil	0.03	0.01
The Al. Co., Limited	99.00	0.27	0.15	0.55	0.02	0.01	nil
Pittsburgh Reduction Co.	99.20	0.41	0.34	0.05	nil	nil	nil
Alliance Al. Co., Ltd.	99.14	0.23	0.17	0.46	nil	nil	nil
Pittsburgh Reduction Co.	99.34	0.40	0.21	0.05	nil	nil	nil

The makers represented above are:

The Pittsburgh Reduction Company. New Kensington, Pa.

The Alliance Aluminium Company, Limited. Wallsend-on-Tyne, England.

The Aluminium Company, Limited. Oldbury, near Birmingham, England.

The Société Anonyme de l'Aluminium. Nanterre, France.

The Aluminium Industrie Actien-Gesellschaft. Neuhausen, Switzerland.

The second, third and fourth of these firms used the sodium process, the others the electrolyic methods. It is at once seen that for metal with the same proportion of aluminium, that made by the electrolytic processes contains less iron, but more silicon, than that made by the sodium processes; there is no observable regularity in the proportion of combined and graphitoidal silicon to the amount of iron. On an average, the graphitoidal silicon is about one-third to two-thirds of the combined silicon.

Rammelsberg (Kerl's Handbuch) investigated the question of the different states of silicon in aluminium. He found in aluminium reduced from cryolite by sodium in a porcelain crucible, that on treatment with hydrochloric acid, the combined silicon changes into silica, or part escapes as silicon hydride, while the graphitoidal silicon remains as a black residue. Two analyses gave him the following results:

	1.	2.
Silicon obtained as silica	9.55	1.85
Free silicon	0.17	0.12
Silicon escaping in SiH^4	0.74	0.58

In aluminium containing 6.20 per cent. of total silicon, analyzed in the Pittsburgh Reduction Co.'s laboratory, 3.85 per cent. was graphitoidal silicon. In another specimen, containing 5.30 per cent. of total silicon, 2.40 per cent. was graphitoidal.

An experiment, made at the Pittsburgh Testing Laboratory, to determine the influence of quick or slow cooling on the condition of the silicon, showed that the chilled metal contained slightly more of the silicon in the graphitoidal state and less in the combined state than metal slowly cooled.

This result is the opposite of the behavior of carbon in iron, and it is found, as might be expected, that no appreciable difference in hardness can be detected between the surfaces of ingots cast in chills and those cast in hot moulds.

M. Dumas found that aluminium usually contains gases, about which he makes the following statements:* On submitting aluminium in a vacuum to the action of a gradually increasing temperature up to the softening point of porcelain, and letting the mercury pump continue acting on the retort until it was completely exhausted, considerable quantities of gas were withdrawn. The liberation of the gas from the metal seems to take place suddenly towards a red-white heat. 200 grammes of aluminium, occupying 80 c.c., gave 89.5 c.c. of gas, measured at 17° and 755 mm. pressure. The gas consisted of 1.5 c.c. carbonic acid, and 88 c.c. hydrogen. Carbonic oxide, nitrogen and oxygen, were absent.

The author has observed that molten aluminium will absorb large quantities of gas. On passing sulphuretted hydrogen into the melted metal for about twenty minutes some aluminium sulphide was formed, while the metal appeared to absorb the gas. On pouring, the metal ran very sluggishly, with a thick edge, but when just on the point of setting, gas was disengaged so actively that the crackling sound could be heard several feet away, and the thick metal became suddenly quite fluid and spread over the plate in a thin sheet. The gas disengaged seemed by its odor to contain a large proportion of sulphuretted hydrogen, although free hydrogen may have been present in it.

Le Verrier has established the presence of carbon in small amount in commercial aluminium.† Taking a large quantity of metal and treating it with a current of hydrochloric acid or hydriodic acid gas, entirely free from oxygen, there remains a grey residue. This, treated with dilute hydrochloric acid, gives a very light residue of amorphous carbon, of a maroon color,

* Comptes Rendus, xc., 1027 (1880).

† Comptes Rendus, July, 1894, p. 14.

which, on being separated out, can be entirely burnt to carbonic acid gas in a current of oxygen. This carbon does not contain a trace of graphite; it is entirely amorphous. It is easiest estimated by dissolving ten grammes of aluminium in a concentrated solution of caustic potash, washing the residue with water, drying, burning in a current of oxygen, and weighing the carbonic acid formed. In three specimens tested there were found 0.104, 0.108 and 0.080 per cent. of carbon respectively. To determine the effect of carbon on the physical properties of aluminium, he melted best quality metal, cast a specimen ingot, and then dissolved in it some crystallized aluminium carbide, Al_4C_3 (for method of making this see Chapter XIV). A specimen of the carburized metal was then cast and tested. The results were as follows; the weights being per square millimetre of section:

Cast Specimens.

	Elastic Limit.	Breaking Load.	Elongation.
Pure aluminium	—	11.1 kilos.	9 per cent.
Carburized aluminium	—	6.5 "	5 "
" "	—	8.6 "	3 "

Rolled Specimens.

	Elastic Limit.	Breaking Load.	Elongation.
Pure aluminium, hard	23 kilos.	25.0 kilos.	2.0 per cent.
" " annealed	8 "	14.0 "	23.0 "
Carburized aluminium, hard	20 "	20.79 "	2.5 "
" " annealed	7.7 "	13.80 "	26.5 "

It would appear that the cast metal shows the greatest deterioration by the presence of carbon.

Le Verrier also proved the presence of traces of nitrogen in commercial aluminium by passing the hydrogen evolved during solution in dilute caustic potash into a Nessler solution, which then gives the ammonia reaction. To determine the exact effect of nitrogen, some aluminium was melted and a current of nitrogen passed into it. The metal became saturated with the gas, and showed the following diminution in strength:

Cast Specimens.

	Elastic Limit.	Breaking Load.	Elongation.
Pure aluminium	7.5 kilos.	11.1 kilos.	9 per cent.
Aluminium saturated with nitrogen	6.5 "	9.6 "	6 "

Le Verrier considers that nitrogen and carbon occur in aluminium in the state of aluminium nitride and carbide respectively, dissolved in the excess of aluminium. The same investigator has discovered by the microscope, in the residue left by dissolving in hydrochloric acid, very small, sharp crystals of boron carbide, the boron coming from the boric acid used in agglomerating the carbon electrodes. A little amorphous alumina is also sometimes to be found.

Color.

Deville: The color of aluminium is a beautiful white with a slight blue tint, especially when it has been strongly worked. Being put alongside silver, their color is sensibly the same. However, common silver, and especially that alloyed with copper, has a yellow tinge, making the aluminium look whiter by comparison. Tin is still yellower than silver, so that aluminium possesses a color unlike any other useful metal.

Mallet: Absolutely pure aluminium is perceptibly whiter than the commercial metal; on a cut surface very nearly pure tin-white, without bluish tinge, as far as could be judged from the small pieces examined.

The purest-looking aluminium examined by the author is that made by Grabau. On a fresh fracture it is absolutely white, but on long exposure to the air it takes a faint, almost imperceptible bluish tint. On a cut surface it has the faintest suspicion of a yellow tint, not so decided as the yellowish color of pure tin. Ordinary commercial aluminium is bluish on a fresh fracture, the tint being deeper the greater the amount of impurities it contains. A specimen with 10 per cent. of silicon and 5 per cent. of iron was almost as blue as lead. It is my belief that a very small percentage of copper closes the grain and whitens the fracture a little; I have also found that chilling

suddenly from a high temperature has the same effect. When ingots of aluminium are exposed a long time to damp air, the thin film of oxide forming on them gives a more decided bluish cast to the metal, since the coating is perfectly snow-white and hence, by contrast, heightens the bluish tint of the metallic background. Mourey recommended removing this discoloration by placing the articles first in dilute hydrofluoric acid, 1,000 parts of water to 2 of acid, and afterwards dipping in nitric acid. The oxide would thus be dissolved and the original color restored. Pure aluminium possesses to the highest degree that property expressed best by the French term "éclat." It is rather difficult to see why the blue tint should be more prominent after the metal has been worked, yet I think two reasons will explain this phenomenon; first, aluminium is not a hard metal, and on polishing or burnishing, particles of dirt or foreign substances are driven into the pores of the metal, thereby altering its color slightly; second, any metal looks whiter when its surface is slightly rough than when highly polished, in the latter case it being as much the reflected color of the general surroundings as the color of the metal itself which is seen. I have never seen any highly polished white metal which did not look bluish, especially when reflecting outdoor light. I think this explains why opera-glasses, rings, jewelry, etc., generally look bluer than the bar or ingot-metal from which they are made.

Aluminium takes a very beautiful mat, which keeps almost indefinitely in the air, the surface thus slightly roughened appearing much whiter than the original polished surface. Aluminium can be polished and burnished without much difficulty if attention is given to a few particulars which it is necessary to observe. (For methods of polishing, etc., see Chapter XIII.)

Extremely thin films of aluminium are fine violet-blue by transmitted light.

Fracture.

A cast ingot of purest aluminium has a slightly fibrous structure, a section ½ inch thick bending twenty degrees or

so from a straight line when sharply bent before showing cracks at the outside of the turn. The fracture of such an ingot is uneven, rough, and very close, often showing a curious semi-fused appearance, as if it had been already exposed to heat and the sharpest points melted down. However, only the purest varieties show these peculiarities. Metal containing 96 to 97 per cent. of aluminium begins to show a crystalline structure, breaks short, and with a tolerably level surface. Metal less than 95 per cent. pure shows large shining crystal surfaces on the fracture, the smaller crystals being on the outside of the ingot where it has been cooled most quickly, while in the centre the crystalline surfaces may be as large as $\frac{1}{16}$ inch in diameter. A specimen containing only 85 per cent. of aluminium broke as short as a bar of antimonial lead, with a large granular, crystalline surface.

Working the metal increases its fibrousness greatly, the section of a square rolled bar of good metal looking very much like that of a low-carbon steel.

Hardness.

The purest aluminium is distinctly softer than the commercial; estimated on the scale of hardness proposed by Mohs it would be written as about 2.5, that is, a little harder than can be scratched by the nail. It is not so soft as pure tin. The presence of impurities, however, rapidly increases the hardness. While 99 per cent. aluminium can be cut smoothly with the knife and shavings turned up almost as with pure tin, yet 95 per cent. metal can hardly be cut at all; the shavings break off short, and a fine grating is felt through the blade.

Aluminium becomes surface hardened by cold working. Castings of aluminium drop-forged cold, in dies, are made sensibly harder and thus adapted for standing more wear. Cold drawing or rolling gives to it nearly the hardness of brass. In a drop test to investigate this quality made in the Pittsburgh Testing Laboratory, the following comparative results were reached:

	Hardness.
Aluminium, rolled	62
Aluminium, cast	47
Brass, rolled	86
Brass, cast	71
Copper	100

Experience in testing various specimens of commercial aluminium with the knife will, I am sure, enable a person to become quite skillful in determining the purity and in separating different grades from each other. Taking this test in connection with the breaking and surface of fracture, it appears to me that these indications are as significant and can be made of as much use as the corresponding tests for iron, steel, and other metals. Mr. Joseph Richards, the author's father, having had many years' experience in testing lead, tin, zinc, and similar metals, in which the knife-blade has been put to good service, has been able with very little practice to arrange a number of specimens of aluminium correctly according to their purity simply by noting carefully the way they cut and the color of the cut surface. These tests will in the future, I am sure, be of great use to those handling aluminium on a large scale, especially in the works where it is produced.

Specific Gravity.

Mallet: The specific gravity of absolutely pure aluminium was carefully determined at 4° C., and the mean of three closely agreeing observations gave 2.583.

Commercial aluminium is almost always heavier than this, but the increase is not in direct proportion to the amount of impurities present. There are two reasons why this last statement is correct; first, we cannot say what expansion or contraction may take place in forming the alloy; second, while most of the impurities which occur are much heavier than aluminium, yet silicon, the most frequent of all, has a specific gravity of only 2.34 (Deville's determination), and therefore acts in the opposite direction to the other impurities, though

not to so great an extent. The following analyses and specific gravities may give some information on this point:—

Analysis.			Specific Gravity.	
Aluminium.	Silicon.	Iron.	Observed.	Calculated.
97.60	0.60	1.80	2.735	2.61 (2.64)
95.93	2.01	2.06	2.800	2.61 (2.69)
94.16	4.36	1.48	2.754	2.59 (2.74)
78.—	16.—	4.—	2.85	2.66

It is seen in each case that the calculated specific gravity is much less than the observed, which would show contraction in volume by alloying. Indeed, this is a prominent characteristic of aluminium alloys, aluminium often taking up several per cent. of its weight of another metal without its volume being increased, the particles of the other metal seeming to pass between those of the aluminium; thus probably accounting for the extraordinary strength and closeness of many of the aluminium alloys. This subject is treated more at length in the chapter on alloys. We can see the large contraction taking place by inspecting the numbers in parentheses under the heading "Calculated." These are computed on the supposition that the volume of the impure aluminium is equal to that of the pure aluminium entering into it. As these numbers are also less than the observed specific gravities, the extraordinary fact is shown that aluminium can absorb several per cent. of iron and silicon and yet will decrease in volume in doing so.

The remarks thus far made are based on the gravity of cast metal. Aluminium increases in density by being worked: Deville states that metal with a specific gravity of 2.56 had this increased to 2.67 by rolling, which, he says, may explain the differences existing in its properties after being annealed or worked. He remarked further that heating this rolled metal to 100°, and cooling quickly, changed its specific gravity very little, lowering it to 2.65. I have observed that on heating a piece of aluminium almost to its fusing point and suddenly chilling it in water, its specific gravity was lowered from 2.73 to 2.69.

Experiments made by Prof. J. W. Langley with aluminium 98.52 per cent. pure, the rest being mostly silicon, gave its specific gravity as follows:

Sample sawn from centre of a cast ingot	2.587
Same, annealed.	2.692
Rolled into sheet 0.0625 inch thick	2.710
Stamped into medals	2.725

The low specific gravity of aluminium, when compared with that of the other metals, is (in the words of a recent lecturer) "the physical property on which our hopes of the future usefulness of aluminium chiefly rest." The following table will facilitate this comparison:

	Specific Gravity.			
	Water = 1.	Aluminium = 1.	Pounds in a cubic foot.	Kilos in a cubic meter.
Platinum	21.5	8.3	1344	21,500
Gold.	19.3	7.4	1206	19,300
Lead	11.4	4.6	712	11,400
Silver	10.5	4.0	656	10,500
Copper.	8.9	3.5	557	8,900
Iron and steel.	7.8	2.8	487	7,800
Tin	7.3	2.7	456	7,300
Zinc	7.1	2.7	444	7,100
Aluminium	2.6	1.0	163	2,600

In comparing the price of aluminium with that of a metal which it might replace, for purposes where the bulk of the article is fixed, it is of first importance to take this low specific gravity into account. When we come to consider closely, we find that almost every article of use or ornament is wanted of a fixed size, and therefore the real basis of comparison of prices is that of a fixed volume of the metal rather than a fixed weight. To facilitate this comparison, I give below the actual market prices of one pound weight of the common metals, with the prices of equal volumes:

	Value of 1 pound.	Relative cost of equal weights.	Value of 1 cubic foot.	Relative cost of equal volumes.
Silver	$10.00	2850	$6560.00	11430
Nickel	0.50	140	279.00	468
Aluminium	0.35	100	57.50	100
German silver	0.30	85	167,00	290
Tin	0.15	43	68.50	120
Bronze	0.15	43	79.00	137
Brass	0.12	34	61.75	107
Copper	0.10	28	55.75	97
Lead	0.04	11	28.50	50
Zinc	0.04	11	17.75	31
Steel	0.02	6	9.75	17
Cast Iron	0.01	3	5.00	8

It is therefore evident, that for almost all uses to which aluminium is applicable, there are only five of the common metals which are cheaper, viz., copper, lead, zinc, steel and cast-iron. When it is further remembered that the cost of the metal alone usually forms only a small part of the value of the finished article, it can be further asserted that there should be only a trifling difference between the cost of an article made in aluminium and one of tin, bronze, brass or copper. The sole reason why aluminium articles are not sold more cheaply at present, lies in the fact that they are not made and sold in such large quantities; the increase of the aluminium industry will therefore ensure lower prices for aluminium goods.

FUSIBILITY.

Deville: Aluminium melts at a temperature higher than that of zinc, lower than that of silver, but approaching nearer to that of zinc than silver. It is, therefore, quite a fusible metal.

Mallet: It seems that pure aluminium is a little less fusible than the commercial metal.

Pictet determined the melting point to be 600°, Heeren about 700°, while Van der Weyde placed it as high as 850°. On a sample containing 0.5 per cent. of iron, Carnelly determined the melting point at 700°; with 5 per cent. of iron it did not fuse completely until 730°. The discordance between these various experimenters lies chiefly in the errors of the pyro-

meters used. Since the perfection of the electric pyrometer by Le Chatelier, the melting point of the purest aluminium has been repeatedly observed as very close to 625°. This figure is probably correct within 5°.

A very small admixture of iron and silicon *lowers* the melting point. Le Chatelier found with a metal containing 1.50 per cent. silicon and 0.75 per cent. iron, the melting point 619°. A larger quantity of either of these elements quickly operates in the other direction, and prevents fluid fusion until a temperature above 625° is reached.

Spring has determined that aluminium powder flows to a solid mass at a pressure of 38 tons per square inch, at ordinary temperatures.

VOLATILIZATION.

Deville: Aluminium is absolutely fixed, and loses no part of its weight when it is violently heated in a forge fire in a carbon crucible.

This statement was made in 1859, and can still be accepted as true as far as ordinary furnace temperatures are concerned. But, with the use of the electric furnace, temperatures have been attained at which aluminium does sensibly volatilize. In Cowles Bros. electric furnace it is stated that the aluminium is almost all produced as vapor and as such is absorbed by the copper or iron present; when these are not present it is found condensed in the cooler upper part of the furnace. A similar experience has been met in other electric furnace processes, so that the volatilization of aluminium at these extreme temperatures may be accepted as a fact.

Aluminium vapor has been recently produced in an electric furnace in large enough amounts to determine that it is of a green-blue color.

ODOR.

The purest aluminium has no perceptible odor, but metal containing 1 per cent. or more of silicon exhales the odor of silicon hydride, exactly the same odor as proceeds from cast

iron. Second quality commercial aluminium gives this smell quite strongly, but in the present first quality metal it is difficult to detect it except by smelling immediately after a brisk rubbing.

TASTE.

The same remark may be made regarding taste as of the odor. The purest metal has no taste; the impure tastes like iron, but not so strongly.

MAGNETISM.

Deville, as also Poggendorff and Reiss, state that aluminium is very feebly magnetic. It must be remembered, however, that they tested metal made by the sodium process, which almost invariably contained iron.

Prof. Frank Very, of the Allegheny Observatory, Allegheny, Pa., finds aluminium with only a trace of iron to be absolutely non-magnetic. With 0.05 per cent. of iron, none could be observed. An ingot containing 1.5 per cent. iron showed faint polarity, while with 2 per cent. the polarity was very decidedly observed.

Since the present first quality commercial aluminium contains less than 0.2 per cent. of iron, and frequently only 0.05 per cent., we may observe that this is less than is usually found in commercial brass, bronze or german-silver, and for this reason, as well as its other valuable properties, aluminium answers very well for compass boxes or cases, or parts of electrical instruments where non-magnetic properties are desired.

SONOROUSNESS.

Deville: "A very curious property, which aluminium shows the more the purer it is, is its excessive sonorousness, so that a bar of it suspended by a fine wire and struck sounds like a crystal bell. M. Lissajous, who with me observed this property, has taken advantage of it to construct tuning forks of aluminium, which vibrate very well. I also tried to cast a bell, which has been sent to the Royal Institution at London at the

request of my friend Rev. J. Barlow, vice-president and secretary of the institution. This bell, cast on a model not well adapted to the qualities of the metal, gives a sharp sound of considerable intensity, but which is not prolonged, as if the clapper or support hindered the sound, which, thus hindered, becomes far from agreeable. The sound produced by the ingots is, on the contrary, very pure and prolonged. In the experiments made in Mr. Faraday's laboratory, this celebrated physicist has remarked that the sound produced by an ingot of aluminium is not simple. One can distinguish, by turning the vibrating ingot, two sounds very near together and succeeding each other rapidly, according as one or the other face of the ingot faces the observer."

The bell referred to above was 20 kilos in weight and 50 centimetres in diameter, but as Deville admits, its sound was not pleasing, and a contemporary writer, evidently not very enthusiastic in sounding the praises of aluminium, said that "while the bell was highly sonorous, yet it gave a sound like a cracked pot."

I have not heard that any large bell has since been cast, but it is certain that the metal in bars has a highly musical ring. Faraday's observation has also been verified, for a recent lecturer suspended by one end a bar 6 feet long 3½ inches wide, and 1½ inches thick, and on striking it a prolonged vibration ensued, two notes being recognized, A sharp and D sharp, the latter more subdued.

Within the last few years aluminium has been extensively employed for sounding boards in public halls, the sounding boards of pianos, and even for the construction of horns and violins. The sounding board in the Lyceum Hall, New York city, is an example. The particular advantage is, its not being affected by a moist atmosphere. Dr. Alfred Springer, of Cincinnati, in speaking of its use for sounding boards says,* "It differs from all other metals in the absence of the comparatively

* Trans. A. A. Adv. Science, 1891, vol. 40, p. 182.

continuous and uniform higher partial tones, which give in other metals the tone-color called "metallic," and further, that it also possesses an elasticity capable of sympathetic vibration uniformly through a wide range of tone-pitch, which renders it in this respect superior to wood."

Dufour has measured the velocity of sound in aluminium at 4950 metres per second, almost the same figure as for steel.

Crystalline Form.

Deville: "Aluminium often presents a crystalline appearance when it has been cooled slowly. When it is not pure, the little crystals which form are needles, and cross each other in all directions. When it is almost pure it still crystallizes by fusion, but with difficulty, and one may observe on the surface of the ingots hexagons which appear regularly parallel along lines which centre in the middle of the polygon. It is an error to conclude from this observation that the metal crystallizes in the rhombohedral system. It is evident that a crystal of the regular system may present a hexagonal section; while on the other hand, in preparing aluminium by the battery at a low temperature, I have observed complete octahedrons which were impossible of measurement, it is true, but their angles appeared equal."

By slowly cooling a large body of melted aluminium and pouring out the fluid interior, distinct octahedrons may be observed.

Elasticity.

Cast aluminium is not very elastic; it may be likened in this respect to cast silver. When worked, however, it becomes more rigid and elastic.

Mallet remarked that absolutely pure aluminium seemed to be less hardened by hammering than ordinary commercial metal.

Cast aluminium stiffens up very quickly in rolling or drawing, and the strains set up in the metal can be removed by an

annealing, which consists in heating the metal to an incipient red heat and then either allowing to cool slowly, or leaving a few minutes at that heat and then cooling quickly by plunging into water. Metal thus treated becomes very soft and pliable, hardly any more elastic than lead, and will stand considerable working before it again becomes stiff and elastic. The presence of 2 to 5 per cent. of copper, nickel, silver, German-silver or titanium increases very greatly the elasticity of aluminium without increasing noticeably its specific gravity or impairing its malleability.

Tensile and Compressive Strength.

W. H. Barlow* was the first to carefully test the tensile strength of aluminium. He used a rolled bar one-quarter inch square. With a test piece two inches long, the tensile strength was found to be 26,800 pounds per square inch, with elongation before breaking of 2.5 per cent.

Kamarsch† tested aluminium wire, and obtained an average of 12.5 kilos per square millimetre, equal to nearly 18,000 pounds per square inch. This wire must have been annealed, while the bar tested by Barlow was worked stiff before testing.

Mr. Spilsbury, of the Trenton Iron Co., obtained with aluminium wire of one-sixteenth inch diameter a tensile strength of 62,300 pounds per square inch, the wire having been drawn with one annealing from a wire-rod one-sixth inch in diameter. The same wire made 47 bends at a right angle before breaking.

A most valuable series of mechanical tests of aluminium have been made by the Pittsburgh Reduction Company, and are copied as follows‡:

* Rpt. British Assoc. Adv. Science, 1882, p. 668.

† Dingler, Vol. 172, p. 55.

‡ Transactions Am. Inst. Mining Engineers. Vol. XVIII., p. 528 (1890).

Tensile Tests.

No. 1 quality commercial metal, averaging over 98 per cent. pure.	Elastic limit, pounds per square inch.	Ultimate strength, pounds per square inch.	Percentage reduction of area.	Estimated safe working strain, pounds per square inch.
Ordinary castings of over $\frac{1}{2}$ inch sectional area, as cast	6,132	15,640	8.66	3,000
Same, annealed	6,600	17,100	15.00	3,500
Same castings, hardened by drop forging cold	10,000	24,000	18.00	3,000
Rolled bars, left hard	16,000	32,500	42.00	6,000
Same, annealed	13,870	25,000	49.11	6,000
Hammered bars, left hard	14,630	24,120	35.14	5,500
Same, annealed	14,000	22,000	43.00	5,500
Wire $\frac{1}{2}$ to $\frac{1}{6}$ inch diameter, as drawn.	12,000	24,500	58.46	4,500
Same, annealed	10,870	22,830	65.57	4,500
Wire $\frac{1}{16}$ to $\frac{1}{30}$ inch diameter, as drawn.	32,000	54,000	68.00	12,000
Wire $\frac{1}{30}$ to $\frac{1}{80}$ inch diameter, as drawn	26,000	49,000	54.00	10,000
Same, annealed	21,000	33,000	62.00	7,000
Plates to $\frac{1}{8}$ inch thick, as rolled	9,300	22,740	12.40	4,000
Same, annealed	8,500	17,740	13.73	4,000
Sheets $\frac{1}{8}$ to $\frac{1}{30}$ inch thick, as rolled	12,500	25,000	35.50	4,500
Same, annealed	10,700	21,070	39.00	4,500
Sheets $\frac{1}{30}$ to $\frac{1}{100}$ inch thick, as rolled	13,500	27,500	40.00	4,500
Same, annealed	11,000	23,000	43.50	4,500

Compressive Tests.

Same metal is in above tensile tests, about 98 per cent. pure.	Elastic limit in pounds per square inch.	Ultimate strength in pounds per square inch.	Size of original specimens.	Size after failure.
			Height x diam.	Height x diam.
Ordinary casting, as cast	3,565	12,730	1 in. x 0.5 in.	0.985 x 0.503
Same, annealed.....	2,037	10,185	1 in. x 0.5 in.	0.975 x 0.506
Same, hardened by drop forging.	4,583	15,275	1 in. x 0.5 in.	0.965 x 0.508
Rolled bars, left hard.....	2,263	9,054	1.5 in. x 0.75 in.	1.459 x 0.760
Same, annealed.....	2,043	6,809	1.5 in. x 0.75 in.	1.468 x 0.756
Hammered bars, left hard.....	5,659	11,320	3 in. x 1.5 in.	2.91 x 1.520
Same, annealed.....	5,094	11,320	3 in. x 1.5 in.	2.91 x 1.519
Metal containing 4.5 per cent. silicon and 1.5 per cent. iron, casting, unannealed	4,800	15,275	1 in. x 0.5 in.	0.965 x 0.508
Metal containing 1.14 per cent. silicon and 0.05 per cent. iron, castings, unannealed	4,583	12,730	1 in. x 0.5 in.	0.975 x 0.507
Same, larger test-piece.	5,094	11,320	3 in. x 1.5 in.	2.92 x 1.519

Transverse Tests.

	Load, pounds.	Deflection, inches.	Permanent set, inches.
Metal containing 98.52 per cent. aluminium, 1.14 per cent. silicon, and 0.05 per cent. iron. Test-piece one inch square, supported on knife edges 24 inches apart, loaded in the centre...	50	$\frac{2}{64}$	$\frac{2}{64}$
	100	$\frac{5}{64}$	—
	150	$\frac{28}{64}$	$\frac{18}{64}$
	175	$\frac{29}{64}$	—
	200	$\frac{47}{64}$	$\frac{40}{64}$
	225	$\frac{63}{64}$	—
	250	$1\frac{24}{64}$	$1\frac{16}{64}$
	275	$1\frac{60}{64}$	$1\frac{50}{64}$
	300	$2\frac{18}{64}$	$2\frac{2}{64}$
			Not ruptured.
Same metal, test-piece a 1.5 inch diameter rolled bar, on knife-edges 12 inches apart, loaded in the centre.....	1,000	$\frac{2}{64}$	0
	1,500	$\frac{4}{64}$	$\frac{1}{64}$
	2,000	$\frac{10}{64}$	$\frac{7}{64}$
	2,500	$\frac{26}{64}$	—
	2,800	$\frac{43}{64}$	—
			Broke.

From the various tests above enumerated, Messrs. Hunt, Langley and Hall draw the following general conclusions:

The average strength of commercial aluminium of the following average composition:

Aluminium	97.	to	99.	per cent.
Graphitic silicon	0.1	to	1.0	"
Combined "	0.9	to	2.8	"
Iron	0.04	to	0.2	"

is as follows:

		Pounds per square inch.
Elastic limit in tension	Castings	6,500
	Sheet	12,000
	Wire	16,000–30,000 (according to fineness)
	Bars	14,000
Ultimate strength in tension	Castings	15,000
	Sheet	24,000
	Wire	30,000–65,000 (according to fineness)
	Bars	28,000
Percentage of reduction of area, in tension	Castings	15 per cent.
	Sheet	35 "
	Wire	60 "
	Bars	40 "

	Pounds.
Elastic limit in compression in cylinders with length twice the diameter	3,500
Ultimate strength	12,000
Modulus of elasticity, castings	11,000,000
" " cold-drawn wire	19,000,000
" " sheets and bars	13,000,000

Professor Le Chatelier * has shown that the tensile strength of annealed aluminium wire varies with the temperature as follows:

	Kilos per sq. millimetre.	Pounds per sq. inch.
At 0° C.	18	26,000
150°	13	18,500
250°	7	10,000
300°	5	7,000
400°	2	3,000

* Lejeal's Aluminium.

Minet found the following properties for aluminium strongly worked and annealed:

	Tensile strength.		Elongation.
	Kilos per sq. mm.	Pounds per sq. in.	Per cent.
After working.	23.5	33,000	3
After being annealed 1 hour at 400°....	15.1	21,500	17

He concludes from these results that, by careful annealing at proportionate temperatures and for proportionate times, any given strength between these limits may be obtained, or any desired elasticity from 3 to 17 per cent.

The results obtained for the tensile strength of aluminium show, in general, that it is greatly influenced by the amount of work done on the metal; that while the pure, unworked metal is by no means rigid, but elongates 10 to 20 per cent. before breaking, as it is worked it becomes stiffer and more elastic, its strength may be nearly doubled, but it becomes at the same time more brittle, as is shown by its elongation falling to 3 or 5 per cent. After working, increased elongation can be given to it by annealing, but at the expense of ultimate strength. The annealed material, however, would be a safer material to use in any place where sudden shocks had to be sustained, if worked within its elastic limit.

Taking the tensile strength of aluminium in relation to its weight, it shows a very high mechanical value; in fact, the only material which can compare with it in tensile strength, weight for weight, is the finest steel or aluminium bronze. A comparison on this basis is frequently made, in order to determine the material which gives the greatest strength for a given weight, or, rather, a given strength with the least weight. For instance, we might make the comparison by calculating the weight of rods of the different metals which would support a certain maximum strain before breaking, and from these numbers derive a table of the relative weights of the metals to give a certain strength:

Rolled Bars or Large Wire.	Tensile strength, pounds per sq. in.	Relative strength for same section.	Relative strength for same weight.
Aluminium	30,000	100	100
Cast steel.	100,000	333	135
Soft steel	75,000	250	87
Wrought iron	55,000	183	63
Aluminium bronze	100,000	333	118
" brass	60,000	200	70
Gun bronze	35,000	117	37
Red brass	45,000	150	47
Copper	33,000	110	33

It results from this comparison that only steel of the highest quality and the best aluminium bronze will give a greater strength for a given weight than aluminium. Steel, however, is subject to rust, whereas aluminium is not; aluminium bronze itself is a metal requiring considerable skill in working it to always obtain the highest results; these two are the only competitors which aluminium has for constructions where great strength combined with lightness is the first requirement, and expense is a secondary consideration.

Malleability.

Aluminium stands high in the list of malleable metals. It can be forged or rolled as easily as gold or silver, and can be beaten out into leaf.

Mallet found that absolutely pure aluminium is decidedly more malleable than the commercial metal, and is less hardened by working. Experience in rolling it on a large scale has since shown that the more impurity in the metal the harder it is to work, and the quicker it will become hard and need annealing. Some impurities, however, are more detrimental than others. One per cent. of iron renders the metal stronger and harder to roll, but more than this amount renders it less and less malleable, until with 6 per cent. it is crystalline and brittle. On the other hand, silicon may occur alone up to nearly 10 per cent. without rendering the metal unfit for rolling.

Aluminium is most malleable between 100° and 150° C., and can be worked some time at that temperature before becoming

hard. If rolled or worked cold, it needs more frequent annealing. While annealed aluminium is one of the softest and most pliable metals, yet by cold working it can be given the stiffness and temper of hard brass. The best commercial metal is regularly rolled into sheets one-thousandth of an inch in thickness, which sheets are sold for beating purposes, and it has been rolled to one-half that thickness.

Metal for beating into leaf must be of the finest quality, *i. e.*, over 99 per cent. pure. Rousseau, of Paris, was the first to make aluminium leaf, and it was afterwards made for several years by C. Falk & Co., of Vienna. At present, Mr. Kemp, of New York, manufactures it on a large scale. The beating is a little harder than is required for gold and silver, but by starting with the purest aluminium equally thin leaf can be obtained. A specimen of commercial aluminium leaf examined by the writer had a thickness of 0.000638 millimetre, or one forty-thousandth of an inch, which compares favorably with ordinary silver leaf. This leaf was opaque, but the thinnest attainable leaf is a fine blue by transmitted light. No other useful metals except gold and silver will show such malleability. This leaf is now in regular use with gilders and decorators, and has entirely superseded silver leaf because of its cheapness and non-tarnishing qualities. The leaf is also rubbed into powder, and in that state used as a metallic dust in printing and decorating.

Ductility.

Aluminium can be drawn into very fine wire. Even as early as 1855, M. Vangeois made very fine wires with metal far from being pure, and used them for making aluminium passementerie. The metal quickly hardens at the drawing plate, and must be frequently annealed. The larger sizes of wire can be drawn warm, and then require less frequent annealing. The heated gases from the chimney of an Argand burner will anneal the very fine wires if they are simply passed across it. Wire as fine as 0.1 millimetre (one two-hundred-and-fiftieth of an inch) can be made without much trouble, while wire one-seventieth

of an inch in diameter is regularly kept in stock by the aluminium dealers.

Gold, silver, platinum, iron and copper are probably the only metals more ductile than aluminium.

Expansion by Heat.

Fizeau determined that aluminium expands 0.00222 of its length in passing from the freezing point to the boiling point, or 0.0000222 of its length for a rise of 1° Centigrade, equal to 0.00001129 per 1° Fahrenheit.

Prof. J. W. Langley examined metal 98.5 per cent. pure, the rest being mostly silicon, and obtained for the expansion for 1° C. 0.0000206, which would be 0.0000115 for 1° F.

A bar of aluminium 1 foot long at 0° C. would, according to Fizeau, be 1.00222 feet long at 100°, while a cubic foot of aluminium at 0° would occupy 1.00666 cubic feet at 100° C., since the rate of cubical increase is three times that of linear expansion. This rate of expansion is close to that of tin, among the common metals.

Specific Heat.*

The best experimenters have given various values for the specific heat of aluminium, but it is very evident to the writer that the differences are mainly due to differences in the purity of the metal used. Professor Mallet used absolutely pure aluminium (purified for atomic weight determination), and the writer used metal which analyzed 99.93 per cent. pure, and contained but a trace of iron, while the other experimenters used ordinary commercial metal made by the sodium process and containing considerable quantities of iron.

Regnault, in 1855, used metal containing only 88.35 per cent. of aluminium. His figure of 0.2056, between 25° and 97°, is, therefore, only approximate.

* For further details, see papers on this subject by the author in Journal of the Franklin Institute, April, 1892, and July, 1893.

In 1856, Regnault obtained metal 97 per cent. pure, with which he obtained 0.2122 (14° to 97°).

Kopp, in 1863, used Parisian aluminium containing two per cent. of iron, and obtained a value varying between 0.1970 and 0.2070 (20° to 52°). His results are unreliable.

In 1882, Mallet found the mean specific heat from 0° to 100°, using absolutely pure aluminium, 0.2253.

Tomlinson * used commercial aluminium in wire, and gives the following formula for the mean specific heat, from any given temperature to 0° C.:

$$S_m = 0.2070 + 0.000115\ t.$$

This would give from 0° to 100°, 0.2185.

Naccari † used commercial metal, and gives the following formula, which expresses his results up to 300° C.:

$$S_m = 0.2116 + 0.0000475\ t.$$

This would give from 0° to 100°, 0.2164.

Le Verrier ‡ stated that he found, using best commercial metal, the specific heat between 0° and 300° to be invariable, and = 0.22; between 300° and 530° also constant, and = 0.30; between 530° and 560° an absorption of heat, rendered latent, of about 10 calories; between 540° and 600° the specific heat again constant, and = 0.46. For the total quantities of heat in the metal, at various temperatures, he gives:

0° to 300°	$Q = 0.22\ t.$
300° to 530°	$Q = 65 + 0.30\ (t-300).$
540° to 600°	$Q = 139 + 0.46\ (t-530).$
About 600°	$Q = 170.$
Before fusion at 620°	$Q = 200.$

These determinations would give the mean specific heat from 0° to 100°, 0.2200. No other investigator, however, has noticed the sudden jumps noted by Le Verrier, which, if true,

* Proc. Royal Society, 1885, p. 494.

† Trans. Accademia di Torino, Dec., 1887.

‡ Comptes Rendus, 1892, Vol. 114, p. 907.

are indeed very singular. Experiments by Pionchon and the writer, about to be described, gave no indications of such critical points.

Pionchon* states that he used very pure aluminium, and obtained the following formulæ:

0° to 580°	$Q = 0.393\,t - \frac{291.86\,t}{1517.8 + t}$
625° to 800° (Molten.)	$Q = 0.308\,t - 46.9.$

This would give the specific heat at 0°, = 0.2010; the mean specific heat 0° to 100° = 0.2130; heat in solid aluminium at its melting-point, 160.5 calories; heat in molten aluminium at the setting-point, 239.4 calories; specific heat of molten aluminium constant, and = 0.308. The latent heat of fusion would be 239.4 — 160.5 = 78.9 calories.

The writer, using aluminium which analyzed 99.93 per cent. pure, with only a trace of iron and 0.07 per cent. silicon, obtained the following formulæ for solid aluminium up to 600°:

Mean specific heat to 0°–	$S_m = 0.2220 + 0.00005\,t.$
True specific heat at t°–	$S = 0.2220 + 0.0001\,t.$
Total heat to 0°–	$Q = 0.2220\,t + 0.00005\,t^2.$

These formulæ give for the specific heat at 0° = 0.2220; the mean specific heat 0° to 100° = 0.2270; the heat in solid aluminium at the melting-point, 158.3 calories; specific heat at the melting-point, 0.285.

Regarding these figures, it will be observed that the mean value 0° to 100° is less than 1 per cent. different from Mallet's result, and therefore these values may be accepted as the true value of the mean specific heat between those temperatures. Regarding the value for the heat contained at the melting-point, it is only a fraction over 1 per cent. removed from that given by Pionchon's formula. It must not be forgotten, however, that aluminium begins to soften at about 600°, and some of its latent heat of fusion is absorbed before the true melting-point,

* Comptes Rendus, 1892, Vol. 115, p. 163.

625°, is reached, as observed by both Pionchon and Le Verrier. The numbers given by the formulæ are the theoretical amounts of heat which the metal would contain at 625°, provided that none of the latent heat of fusion had been previously absorbed.

To determine the amount of heat in the molten metal at its setting point the writer made several determinations by pouring the metal into water, just as it was setting. The result showed that the purity of the metal had a great effect on the amount of heat thus given up.

Aluminium	96.9	per cent.	pure	gave up	229.0	calories.
"	99.9	"	"	"	254.0	"
"	99.93	"	"	"	258.3	"

It is seen that a small amount of impurity makes a large difference, which is really caused by the impurity lowering the melting point of the metal. Since the metal used by Pionchon was not over 99.7 per cent. pure, we have a partial explanation of why he obtained only 239.4 calories in the molten metal. The figure deduced by the writer for the latent heat of fusion of aluminium is therefore 258.3—158.3=100 calories.

The value of the specific heat of aluminium determined by Mallet and the writer agrees best with Dulong and Petit's law, as is seen by the following comparison of the actual and atomic specific heats for the interval 0° to 100°:

Experimenter.	Specific Heat	x	Atomic Weight	=	Atomic Heat.
Regnault	0.2122	x	27.0	=	5.73
Kopp	0.2020		"		5.45
Tomlinson	0.2185		"		5.90
Naccari	0.2164		"		5.88
Le Verrier	0.2200		"		5.94
Pionchon	0.2130		"		5.75
Mallet	0.2253		"		6.08
Richards	0.2270		"		6.13

Since for all the common metals the product of the atomic weight by the specific heat for this range of temperature is invariably above 6.0, and averages 6.2, the conclusion is plain that the last two figures given above must be the correct ones.

The high value of the specific heat of aluminium compared with other metals, and particularly its large latent heat of fusion, cause the metal to melt very slowly even in a very hot fire. As seen above, over 258 calories have to be absorbed in order to raise it to the melting point and melt it. It compares with other metals as follows:

Aluminium	258.3	calories.
Cast iron	250.0	"
Copper	162.0	"
Platinum	102.4	"
Silver	85.0	"
Gold	58.0	"

We can therefore deduce the interesting fact, which is amply confirmed by observation, that having a furnace hot enough to melt cast iron, we would find that a given weight of gold, silver or copper would melt before the same weight of aluminium, and even the cast-iron would not be far from melting by the time the aluminium fused.

Electric Conductivity.

Aluminium is a very good conductor of electricity. Metal used for electrical purposes should be of the best quality, and as free as possible from intermingled slag or blow-holes, which impair greatly its conductivity.

Taking the electrical conductivity of absolutely pure silver or copper as 100, we cite the following determinations:

		Silver = 100.	Copper = 100.
Mattheissen. Commercial aluminium		33.76	
Benoit. Annealed wire		49.70	
Watts		56.10	
* Lorenz			49.1 at 0°.
"			50.1 at 100°.
†C. K. McGee. Metal used 98.52 per cent. pure.	Unnealed wire		54.8 at 14°.
	" "		53.7 at 76°.
	Annealed "		57.4 at 14°.
	" "		55.9 at 76°.
Weiler. Best commercial metal		54.20	54.3

* Wied. Annalen, [2], xiii, 422, 582 (1881).

† Trans. Am. Inst. Mining Engineers, xviii, 528 (1890).

The later determinations of McGee and Weiler agree very satisfactorily. Taking 54.8 as the relative resistance at ordinary temperatures, a wire of aluminium 0.1 inch in diameter and 100 feet long would have a resistance of 0.20235 ohms.

Professor Dewar has recently investigated the electrical resistance of the metals at very low temperatures. He finds with aluminium, as with other metals, that the resistance varies directly as the absolute temperature. The following are his results:

Relative Electrical Resistances.

Temperature.	Pure Silver.	Pure Copper.	Aluminium.	
C°	....	....	99 per cent.	97.5 per cent.
19.1	1588	1682	2772	2869
1.0	....	....	2583	2683
—82	....	....	1704	1738
—197	....	....	560	506
—219	....	....	....	325

Thermal Conductivity.

Faraday stated that he had found by a very simple experiment that aluminium conducted heat better than either silver or copper.

L. Lorenz of Copenhagen, in the Jahresbericht der Chemie, 1881, p. 94, stated that he had found it inferior to both of these metals, and later investigations have confirmed this.

Professor Carhart, of the University of Michigan, finds that annealed aluminium is a slightly better heat conductor than the unannealed.

The various results are as follows:

	Silver = 100.	Copper = 100.
L. Lorenz	....	47.72 at 0°.
L. Lorenz	....	50.00 at 100°.
Calvert and Johnson	66.5	
Prof. Carhart. Annealed Metal	38.87	52.8
Prof. Carhart. Unannealed Metal	37.96	51.6

Gold is the only other metal which conducts heat better than aluminium.

CHAPTER IV.

CHEMICAL PROPERTIES OF ALUMINIUM.

WE would here repeat the remark made with regard to the physical properties, that the properties to be recorded are those of the purest metal unless specifically stated otherwise. However, the high grade of commercial metal differs very little in most of its chemical properties from the absolutely pure, so that not many reservations are necessary in applying the following properties to good, commercial metal:

ATOMIC WEIGHT.

The most accurate determination which we have is that of Professor Mallet, who found 27.02. For all practical purposes, and even in analyses, it may be conveniently considered as 27. The chemical equivalent weight is one-third of this, or 9.

ACTION OF AIR.

Deville: "Air, wet or dry, has absolutely no action on aluminium. No observation which has come to my knowledge is contrary to this assertion, which may easily be proved by any one. I have known of beams of balances, weights, plaques, polished leaf, reflectors, etc., of the metal exposed for months to moist air and sulphur vapors and showing no trace of alteration. We know that aluminium may be melted in the air with impunity, therefore air and also oxygen cannot sensibly affect it. It resisted oxidation in the air at the highest heat I could produce in a cupel furnace, a heat much higher than that required for the assay of gold. This experiment is interesting, especially when the metallic button is covered with a layer of oxide which tarnishes it, the expansion of the metal causing

small branches to shoot from its surface, which are very brilliant and do not lose their lustre in spite of the oxidizing atmosphere. M. Wöhler has also observed this property on trying to melt the metal with a blowpipe. M. Peligot has profited by it to cupel aluminium. I have seen buttons of impure metal cupelled with lead and become very malleable.

"With pure aluminium the resistance of the metal to direct oxidation is so considerable that at the melting point of platinum it is hardly appreciably touched, and does not lose its lustre. It is well known that the more oxidizable metals take this property away from it. But silicon itself, which is much less oxidizable, when alloyed with it makes it burn with great brilliancy, because there is formed a silicate of aluminium."

While the above observations are in the main true, yet it is now well known that objects made of commercial aluminium do after a long exposure become coated with a very thin film, which gives the surface a "dead" appearance. The coating is very similar in appearance to that forming on zinc under the same circumstances. The oxidation, however, does not continue, for the film seems to be absolutely continous and to protect the metal underneath from further oxidation. This coating can best be removed by very dilute acid (see Mouréy's receipt, p. 60), after which the surface can be burnished to its former brilliancy.

The action of air and rain water together also slightly corrodes commercial aluminium, the sheet metal particularly showing after several months exposure small white spots of alumina wherever there was a speck or "piqûre." In no case, however, is this corrosion very strong or anything like as serious as the rusting of iron or corrosion of brass, copper, etc.

It has also been found that at a high white-heat, especially at the heat of an electric furnace, aluminium burns with a strong light to alumina. It is quite probable that in this case it volatizes first, and it is the vapor which burns. During the operation of an electric furnace a white smoke formed of invisible particles of alumina is thus formed and evolved from the furnace. Also, in melting aluminium, even the purest, it will

be found that the surface seems bound and the aluminium restrained from flowing freely by a minute "skin" which may probably be a mixture of oxide with metal, or perhaps of oxides of foreign metals; but, nevertheless, it is always present and is therefore indicative of oxidation taking place. It seems to protect the metal beneath it perfectly, so that, once formed, it gets no thicker by continued heating.

Wöhler first discovered that when aluminium was in the extremely attenuated form of a leaf it would burn brightly in air, and burn in oxygen with a brilliant bluish-light. It is also said that thin foil will burn in oxygen, being heated by wrapping it around a splinter of wood, and fine wire also burns like iron wire, but the combustion is not continuous, because the wire fuses too quickly. The alumina resulting is quite insoluble in acids, and as hard as corundum.

The aluminium powder, produced by pulverizing aluminium leaf, burns brilliantly when projected into a flame, and has displaced, to a large extent, magnesium powder for making a flash light, because it is cheaper, gives a more strongly actinic light, and leaves no unpleasant smoke or fumes. For this purpose it is not used pure, but mixed with various chemicals, for the composition of which see the chapter on "Uses of Aluminium."

Action of Water.

Deville: "Water has no action on aluminium, either at ordinary temperatures or at 100°, or at a red heat bordering on the fusing point of the metal. I boiled a fine wire in water for half an hour and it lost not a particle in weight. The same wire was put in a glass-tube heated to redness by an alcohol lamp and traversed by a current of steam, but after several hours it had not lost its polish, and had the same weight. To obtain any sensible action it is necessary to operate at the highest heat of a reverberatory furnace—a white heat. Even then the oxidation is so feeble that it develops only in spots, producing almost inappreciable quantities of alumina. This slight alteration and the analogies of the metal allow us to admit that it decomposes

water, but very feebly. If, however, metal produced by M. Rose's method is used, which is almost unavoidably contaminated with slag composed of chlorides of aluminium and sodium, the former, in presence of water, plays the part of an acid towards aluminium, disengaging hydrogen with the formation of a subchlorhydrate of alumina, whose composition is not known, and which is soluble in water. When the metal thus tarnishes in water one may be sure to find chlorine in the water on testing it with nitrate of silver."

Aluminium leaf, however, will slowly decompose water at 100°. Hydrogen is slowly evolved, the leaf loses its brilliancy, becomes discolored, and, after some hours, translucent. It is eventually entirely converted into gelatinous hydrated alumina.

A. Ditte * explains the action of water on aluminium as follows: Water can only act on aluminium by producing hydrogen gas and alumina, both of which deposit on the metal and cover it with a thin, protective coating. If the conditions are such that this coating is removed, the action becomes manifest. Boiling, for instance, removes the hydrogen, and if chloride, sulphate or nitrate of aluminium be present in the solution to remove the alumina, the action goes on, a basic salt being formed, and continues until a sub-salt is formed which is difficultly soluble or insoluble, and covers the metal with a new, impermeable coating. Traces of these acids in the boiling water would lead to the same result.

Action of Hydrogen Sulphide and Sulphur.

Deville: "Sulphuretted hydrogen exercises no action on aluminium, as may be proved by leaving the metal in an aqueous solution of the gas. In these circumstances almost all the metals, and especially silver, blacken with great rapidity. Sulph-hydrate of ammonia may be evaporated on an aluminium leaf, leaving on the metal only a deposit of sulphur, which the least heat drives away.

* Ann. de Chimie et de Physique [6], Vol. 20, p. 404 (1890).

"Aluminium may be heated in a glass tube to a red heat in vapor of sulphur without altering the metal. This resistance is such that in melting together polysulphide of potassium and some aluminium containing copper or iron, the latter are attacked without the aluminium being sensibly affected. Unhappily, this method of purification may not be employed because of the protection which aluminium exercises over foreign metals. Under the same circumstances gold and silver dissolve up very rapidly. However, at a high temperature I have observed that it combines directly with sulphur to give aluminium sulphide. These properties varying so much with the temperafure from one of the special characteristics of the metal and its alloys."

Margottet states that hydrogen sulphide is without action on aluminium, as also are the sulphides of iron, copper, or zinc. Aluminium is said to decompose silver sulphide, Ag_2S, setting the sulphur, however, at liberty, and alloying with the silver. In regard to its indifference to the first mentioned sulphides, this would give inferential evidence that the reverse operation, *i. e.*, the action of iron, copper, or zinc on aluminium sulphide, would be possible, as will be seen later to be apparently established by direct experiment. As to the action of sulphuretted hydrogen, the author has a different experience to quote. On passing a stream of that gas into commercial aluminium melted at a red heat, little explosive puffs were heard, accompanied by a yellow light, while the dross formed on the surface, when cooled, evolved sulphuretted hydrogen briskly when dropped into water, and gave every indication of containing aluminium sulphide. It could not have been silicon sulphide, for the metal contained as large a percentage of silicon after treatment as before. Hydrogen sulphide is also absorbed in large quantity by molten aluminium, and mostly evolved just as the metal is about to set. Some of the gas is entangled in the solidifying metal, forming and filling numerous cavities or blow-holes.

Sulphuric Acid.

Deville: "Sulphuric acid, diluted in the proportion most suitable for attacking the metals which decompose water, has no action on aluminium; and contact with a foreign metal does not help, as with zinc, the solution of the metal, according to M. de la Rive. This singular fact tends to remove aluminium considerably from those metals. To establish it better, I left for several months some globules weighing only a few milligrammes in contact with the weak acid, and they showed no visible alteration; however, the acid gave a faint precipitate when neutralized with aqua ammonia."

It is a fact that dilute or concentrated sulphuric acid acts very feebly on pure aluminium *in the cold*, but on being heated they both attack it, disengaging sulphurous acid gas. Impure metal is attacked more easily than pure metal, the presence of silicon giving rise to the formation of silicon hydride, which communicates to the hydrogen set free a tainted odor.

Ditte* describes the action of sulphuric acid as follows: A 2.5 per cent. solution acts very slowly at first, if cold, but after several hours the air condensed on the aluminium is removed and the metal is slowly dissolved, evolving hydrogen. The bubbles of hydrogen, however, protect the surface from further attack, but anything which breaks up or removes this gaseous envelope hastens the action of the acid. Certain solutions of metallic chlorides which aluminium reduces act in this way. If, for instance, we add a few drops of platinic chloride to the above acid, platinum is reduced on the aluminium, the surface is roughened, causing the gas to escape quicker, and the action is much more rapid. Traces of chloride of gold, mercury or copper have the same effect. After some time, the action of the acid is stopped by the formation of an insoluble basic salt, having the formula $4Al_2O_3.3SO_3.18H_2O$, which deposits on the metal and protects it from further action. Even very dilute sulphuric acid attacks aluminium if it is prevented from covering itself with the layer of gas, as by boiling.

* Comptes Rendus, cx., pp. 583, 782 (1890).

It appears to the writer that similar reasoning explains why impure aluminium is attacked more rapidly. Aluminium being electro-positive towards the impurities it contains, it follows that when the aluminium is at all attacked by the acid the gas will be disengaged on the particles of the impurity, and not on the aluminium itself; thus the pure aluminium will never get the benefit of the gaseous protection, and the action proceeds rapidly.

G. A. Le Roy* tested four specimens of commercial aluminium, whose analysis was as follows:

	A.	B.	C.	D.
Aluminium	98.28	98.45	99.60	99.47
Iron.....	1.60	1.30	0.30	0.40
Silicon.....	0.12	0.25	0.10	0.13

Specimens A and B were made by the sodium process at Nanterre; C and D by another process, not named. The metal was in sheets and was cut to a definite size, cleaned in soda, washed in alcohol, dried, weighed, and then put in the acid. Afterwards they were withdrawn, washed with water, dipped in alcohol, dried and weighed. The results are expressed as the weight in grammes dissolved during twelve hours from a surface of one square metre:

Quality of Acid.	Specific Gravity.	Degrees Baumé.	Temperature.	Loss in grammes per square metre in 12 hours. A.	B.	C.	D.
Pure	1.842	66°	15°–20°	18.40	18.90	16.40	14.50
Commercial.....	1.842	66°	"	21.00	21.30	17.50	16.40
Pure	1.711	60°	"	24.50	25.00	22.00	20.00
Commercial.....	1.711	70°	"	25.80	25.70	24.60	22.40
Pure	1.580	53°	"	19.00	18.00	17.90	16.30
Pure	1.263	30°	"	4.60	.. ..	2.60	3.40
Pure	1.842	66°	150°	240	225	150	200
Commercial.....	1.842	66°	150°	267	250	210	220

From these tests Le Roy concludes that it is impracticable to think of using aluminium for the different apparatus, such as pans, pumps, tank linings, etc., used in the manufacture or handling of sulphuric acid.

* Le Moniteur Industriel, Oct. 29, 1891.

While these tests show that the aluminium is certainly dissolved, yet they also prove that the action is very slow. If these acids, for instance, were contained in an aluminium vessel 1 millimetre in thickness (0.04 inch), we can easily calculate from the above figures that the concentrated acid could rest in it cold from 60 to 90 days before eating through; the 30° acid, which is yet strong, would take 290 to 560 days to get through it; while even the hot concentrated acid would not get through in less than 5 days' constant action. We can infer that cold, dilute acid would probably take several years in producing the same effect.

Nitric Acid.

Deville: "Nitric acid, weak or concentrated, does not act on aluminium at the ordinary temperature. In boiling acid, solution takes place, but with such slowness that I had to give up this mode of dissolving the metal in my analyses. By cooling the solution all action ceases. On account of this property, M. Hulot has obtained good results on substituting aluminium for platinum in the Grove battery."

Ditte* describes the action of nitric acid similarly to that of sulphuric. Cold 3 per cent. acid acts very slowly, 6 per cent. quicker but slower than sulphuric acid of the same strength. When the plate becomes rough or mat by the action, the gas escapes more freely from the surface and the attack is more rapid. The gas evolved contains no hydrogen, but is mostly nitrous-oxide, similarly to the action on zinc, with a little ammonia gas. The reaction does not stop with the formation of the neutral nitrate, but this is acted on by the aluminium, forming a white, granular precipitate of a basic salt having the formula: $6Al_2O_3.3N_2O_5.30H_2O$.

While cold acid thus attacks the metal very slowly, the hot concentrated acid at 100° attacks it violently.

The amount of the action of cold nitric acid has been measured by Le Roy, Lunge, and the writer, as follows:

* Vide, p. 88.

	Temperature.	Loss in grammes per square metre in 24 hours.
Le Roy, pure, concentrated	15°–20°	31.50
" commercial, concentrated	"	37.35
" " 52 per cent.	"	30.00
Lunge, pure concentrated.	20°	0.38
" " 65 per cent.	"	4.00
" " 32 per cent.	"	10.27
Richards, pure, concentrated	25°	96.00

The figure last given includes the loss sustained in polishing the metal to its original appearance before immersion. It results from these tests that a sheet of aluminium one millimetre thick, if left standing in concentrated nitric acid, would sustain constant immersion at ordinary temperatures for 3600 days (Lunge), 43 days (Le Roy), or 14 days (Richards), if taken out every day and polished bright.

Concerning the use of aluminium in the Grove battery, which is not a constant battery, but only used to give a strong current for a short time, aluminium sheet one millimetre thick will last a long time and cost only a fraction as much as thin platinum.

Hydrochloric Acid.

This acid attacks commercial aluminium rapidly, quicker when hot than when cold, and the concentrated quicker than the dilute. The very pure metal, however, is attacked slowly, showing that, as with sulphuric acid, the galvanic action of the impurities keeping the aluminium free from a protecting layer of gas, has a great influence on the resistance to acids. Gaseous hydrochloric acid attacks the metal even at a very low temperature.

The presence of silicon, particularly, increases the facility

with which the metal is attacked. When silicon is present, the graphitic silicon remains behind as a black residue, while the combined silicon partly forms silica and partly escapes as silicon hydride (SiH_4), having a very disagreeable smell. When the amount of combined silicon is small, almost all of it may thus escape. In analyzing aluminium, this loss is prevented by keeping the acid well oxidized by bromine water, which prevents the formation of the gas. On evaporating to dryness, after solution, and taking up with water, the graphitoidal silicon remains as a black crystalline residue, while the combined silicon has all been changed to white silica. These can be separated by washing with hydrofluoric acid, which dissolves the silica but leaves the silicon unattacked.

If a small amount of hydrochloric acid is present in a mixture of acids, it leads the attack on the metal, and the other acids form aluminium salts by reacting on the aluminium chloride formed. Hydrobromic, hydriodic and hydrofluoric acids act similarly to hydrochloric. Aluminium fluoride, however, is not so soluble in water as the other halogen salts, and the attack by hydrofluoric acid is therefore hindered by the formation of an insoluble coating on the aluminium when the solution passes a certain degree of concentration.

In an experiment by the writer, best commercial rolled aluminium was put into cold, dilute (3 per cent.) hydrochloric acid. It was some time before any action was observable, and then it was very slow. It lost, after cleaning, at the rate of 58 grammes per square metre of surface per day, which was only a little over half as much as was dissolved by cold, concentrated nitric acid in the same time. A piece of the same metal, however, alloyed with three per cent. of nickel was rapidly attacked under these conditions, and over thirty times as much of it was dissolved in a given time, thus showing strikingly the influence of a small amount of impurity.

Organic Acids, Vinegar, Etc.

Deville: "Weak acetic acid acts on aluminium in the same

way as sulphuric acid, *i. e.*, in an inappreciable degree or with extreme slowness. I used for the experiment acid diluted to the strength of strongest vinegar. M. Paul Morin left a plaque of the metal a long time in wine which contained tartaric acid in excess and acetic acid, and found the action on it quite inappreciable. The action of a mixture of acetic acid and common salt in solution in pure water on pure aluminium is quite different, for the acetic acid replaces a portion of the chlorine existing in the sodium chloride, rendering it free. However, this action is very slow, especially if the aluminium is pure."

"The practical results flowing from these observations deserve to be clearly defined, because of the applications which may be made of aluminium to culinary vessels. I have observed that the tin so often used and which each day is put in contact with common salt and vinegar, is attacked much more rapidly than aluminium under the same circumstances. Although the salts of tin are very poisonous, and their action on the economy far from being negligible, the presence of tin in our food passes unperceived because of its minute quantity. Under the same circumstances aluminium dissolves in less quantity; the acetate of aluminium formed resolves itself on boiling into insoluble alumina or an insoluble sub-acetate, having no more taste or action on the body than clay itself. It is for that reason and because it is known that the salts of the metal have no appreciable action on the body, that aluminium may be considered as an absolutely harmless metal."

The low price of aluminium has within the last two years rendered possible this application to culinary utensils foreseen by Deville, and has led to several investigations as to its resistance to the acids and salts liable to be met with in food.

Two German pharmacists, Lubbert and Roscher, conducted tests of this kind in 1891, but their results were only qualitative, not quantitative, and they made the mistake of using thin aluminium foil, which averages only 0.001 inch thick, instead of heavier sheet. The result was that they found their thin foil totally dissolved by two days immersion in oxalic acid (1, 5

and 10 per cent.), gallic acid (2 per cent.), and corrosive sublimate (1 per cent.); and by four days constant immersion in 1, 5 and 10 per cent. solutions of formic, acetic, butyric, lactic, tartaric and citric acids, pure oleic acid, 10 per cent. solutions of palmitic or stearic acids, in 5 per cent. solutions of carbolic acid, 4 per cent. solution of boric acid, and in pure red wine, white wine, coffee and tea.

It has been found, however, that because of its thinness aluminium foil does not resist corrosion as does the heavier sheet-metal, and while the above results may be strictly true for foil 0.001 inch thick, yet ordinary sheet aluminium is not attacked to anything like such an extent. Culinary utensils are made of sheet at least 1 millimetre (0.04 inch) thick, and tests of material of this thickness made by subsequent investigators have given very different results.

Balland* conducted tests for several months, and found that air, water, wine, beer, cider, coffee, milk, oil, butter, fat, urine, saliva and damp earth have less action on aluminium than on iron, copper, lead, zinc, or tin. Vinegar and salt together attack it, but so slightly as not to prevent its use for cooking; a sheet only lost 1.3 per cent. of its weight in vinegar, and 0.2 per cent. of its weight in a 5 per cent. salt solution after four months' immersion.

Rupp† states that he has kept different kinds of liquid and semi-solid food in aluminium vessels for 4 to 28 days, at the ordinary temperature, and found the metal unaltered. The metal used contained 0.30 per cent. of iron, 0.08 silicon and 99.66 aluminum.

Prof. Geo. Lunge,‡ of Zurich, has made a most careful and systematic investigation of this subject. Assisted by Ernst Schmid, he made the following series of tests; ordinary commercial sheet aluminum from Neuhausen was used. It analyzed:

* Comptes Rendus, 1892, Vol. 114, p. 1536.

† Chronique Industrielle, June 12, 1892.

‡ Zeitschrift für angewandte Chemie, January, 1892.

Aluminium	99.20	per cent. (by difference)
Combined silicon	0.44	"
Graphitic "	0.11	"
Iron	0.25	"
Copper	trace.	

The sheet was 1 millimetre thick, and was cut into strips of a fixed size. These were first carefully cleaned by caustic soda and sulphuric acid, and then immersed six days in the liquids at the ordinary temperature, each liquid being tested twice to guard againt mistakes. The following are their results, expressed as the weight dissolved per day in milligrammes per square metre of surface exposed:

Liquid.	Loss of weight per day in milligrammes per square metre of surface.
Ordinary claret	47.3
" hock	51.2
Brandy	18.0
Pure 50 per cent. alcohol	10.2
Tartaric acid, 5 per cent. solution	28.2
" " 1 " "	43.0
Acetic " 5 " "	64.2
" " 1 " "	73.0
Citric " 5 " "	35.8
" " 1 " "	31.7
Lactic " 5 " "	79.5
Butyric " 5 " "	21.8
Carbolic " 5 " "	3.8
" " 1 " "	8.2
Boric " 4 " "	29.5
Salicylic " ¼ " "	105.8
Coffee (poured hot)	8.3
Tea "	0.0
Beer	0.0

The aluminium strips used showed outward evidences of corrosion in only a few places; only in the case of the salicylic acid solution had the metal lost its bright surface and become dull. In the case of brandy and alcohol, where the quantitative action was very slight, the surface of the aluminium showed a few fungus-like excresences, probably formed by alumina, caused by accidental flaws in the sheet. In the case of a wine

rich in tannin, these spots are liable to be darkened by the influence of the trace of iron dissolved from the aluminium, forming tannate of iron, but the amount thus formed is infinitesmal. The weights dissolved are so extremely small, that it may be calculated that a canteen holding a litre could be kept full of the strong acetic acid for 55 years before losing half its weight.

Lunge and Schmid conclude that, "the action of coffee, tea and beer is practically zero; that of acids and acid liquids is more pronounced, but in the worst case too slight to cause any alarm whatever. Nor is there the slightest danger of any injurious action on the human body by such traces of aluminium compounds, seeing that our food contains very much more than these; in fact, they could not act injuriously unless quantities hundreds of times larger were regularly entering the stomach."

The only criticism we have to make of this valuable investigation is that the solutions should have been tested hot, even boiling, as well as cold. While it is perfectly true, as remarked by a Washington lady, that "we hope never to have occasion to serve our families with poisoned soups or salicylic or boracic acid stews," yet if Lunge had made the hot-liquid tests we should, at least, have known the worst that could possibly happen to the aluminium culinary utensils.

Happily, actual experience has settled all these questions. An aluminium sauce-pan used in the writer's family constantly for two years, which has been used for boiling milk, cooking oatmeal and vegetables, stewing meats and preserving several kinds of fruits, lost less than one-quarter ounce in the whole two years, an average of less than 15 milligrammes per day per square metre of surface exposed, *including frequent cleaning*. I have calculated that at this rate the utensil will become a family heirloom unless accident overtakes it, for it could stand this rate of wear for over a century before losing half its weight. Other experiences equally as striking could be cited, and no better proof of the suitability of aluminium for culinary utensils could be wished. The German Minister of War, after thorough experiments by an army commission, has adopted aluminium

canteens and drinking cups for the soldiers, and entire sets of cooking utensils for use in the officers' quarters. It is the writer's opinion that within a short time the larger part of all the aluminium made will be needed to supply the great demand which will arise for these culinary utensils.

Sodium Chloride.

Common salt does not, when molten, corrode aluminium, so that it forms a good flux to melt the metal with. It does not possess the property, like fluorspar, of dissolving alumina, but acts simply by its fluidity to give a clean melt.

A solution of common salt acts very feebly on aluminium. A strip of rolled aluminium immersed in a three per cent. solution at 27° C. lost weight at the rate of 394 milligrammes per day per square metre of surface (Hunt). The writer found a corresponding loss of 400 milligrammes per day on sheet immersed in a strong brine kept at 65° C. (150° F.) At that rate it would take nine years' constant immersion to entirely dissolve a sheet one millimetre thick.

When an acid is present with the salt, the action is stronger than when either is alone. Mr. Hunt found that when two per cent. of acetic acid was added to the salt solution previously mentioned, the corrosion was increased to 1738 milligrammes per day. This solution will fairly represent the extreme conditions to which aluminium will be subjected in domestic culinary operations, and shows that the corrosion is so slight as to be of no practical consequence, being much less than copper, tin-plate or iron would suffer under similar conditions.

Sea-water corrodes aluminium slightly, but much less than iron or steel, under similar conditions. Strips of aluminium on the sides of a wooden sailing vessel lost less than 100 milligrammes per square metre of surface during six months' exposure (Hunt). Messrs. Yarrow & Co., on the Thames, having in view the building of an aluminium torpedo boat for the French government, took two plates of aluminium stiffened by alloying with six per cent. of copper, and after weighing

accurately secured them on the sides of a wooden, coppered sailing vessel, the copper being removed to make place for the aluminium. This ship made a voyage round the world; then the aluminium plates were removed, weighed, and found to have suffered no appreciable loss. As a consequence of this result, Messrs. Yarrow proceeded with the construction of the boat, which is the largest vessel yet built of aluminium, having a length of sixty feet, beam nine feet three inches and a maximum speed of twenty-two knots (twenty-five and one-half miles) per hour.

It is to be recommended, however, that aluminium hulls intended for salt water should be painted, in order to reduce any possible corrosion to a minimum.

Organic Secretions.

These act only slightly on aluminium, the degree of corrosion being proportioned mostly to the amount of sodium chloride present in the secretion and its degree of acidity, or, particularly, of alkalinity. The saliva acts on it so slightly that aluminium dental plates may be worn for many years without any appreciable corrosion. M. Charrière, a French physician, was the first to make a small tube of it for a person on whom tracheotomy had been performed. He found it to remain almost unaltered by contact with purulent matter; after a long time a little alumina was formed on it, hardly enough to be visible. The use of aluminium for suture wire is also highly recommended; many instruments for physician's use are being made of aluminium, its great advantages being lightness, incorrodibility, and being so easily cleansed, particularly by antiseptic solutions. The tarnishing of polished aluminium articles when constantly handled is due to the perspiration, which contains about two per cent. of sodium chloride and about an equal quantity of organic acids. Its action is not very strong, yet sufficient to spoil a high polish and give a visible tarnish, as would indeed happen to almost any other metal. If, however, the perspiration is profuse and acts on the aluminium con-

stantly while warm, a deeper corrosion results. I have seen an aluminium ankle-stiffener, of metal about one millimetre thick, which was worn in the heel of a boot for about a year, and was then eaten nearly through by the corrosion due to perspiration a little above the ankle. The shoe lining which covered it had served to keep it constantly in contact with the perspiration, while the temperature may have been about 85° C. This is, however, an extreme case, and it would be interesting to know whether steel or very stiff leather would have lasted as long under the same circumstances.

Caustic Alkalies.

Deville: "Solutions of caustic potash or caustic soda act with great energy on aluminium, transforming it into aluminate of potash or soda, setting free hydrogen. However, it is not attacked by caustic potash or soda in fusion; one may, in fact, drop a globule of the pure metal into melted caustic soda raised almost to red heat in a silver vessel, without observing the least disengagement of hydrogen. Silicon, on the contrary, dissolves with great energy under the same circumstances. I have employed melted caustic soda to clean siliceous aluminium, The piece is dipped into the bath kept almost at red heat. At the moment of immersion several bubbles of hydrogen disengage from the metallic surface, and when they have disappeared all the silicon of the superficial layer of aluminium has been dissolved. It only remains to wash well with water and dip it into nitric acid, when the aluminium takes a beautiful mat.

Mallet found that the purest aluminium resists the caustic alkaline solution better than the commercial metal. I have noticed the same fact in comparing aluminium of different degrees of purity; best commercial metal withstood the action of cold, dilute caustic potash solution seven times better than when it contained three per cent. of copper, and seventy times better than when two per cent. of copper and one per cent. of zinc were present.

Prof. A. Stutzer,* of Bonn, finds that the metal made by the electrolytic processes dissolves much slower than that made by the former sodium processes. He ascribes this to the latter metal containing nearly one per cent. of sodium. This, however, can hardly be the case, because metal made by the Deville process rarely contained more than a trace of sodium. The true reason must be simply the greater purity of the metal now being made by electrolysis, which averages over 99 per cent. pure for best quality metal, while the Deville metal was rarely over 98 per cent. pure.

Ammonia.

Aqua ammonia acts slowly on aluminium, producing a little alumina, part of which remains dissolved. Ammonia gas does not appear to act on the metal.

Lime Water.

This acts rapidly on aluminium at first, but the resulting calcium aluminate is insoluble in water, and is, therefore, precipitated on the metal and quickly protects it from further action. If this coating is scraped off the action is repeated.

Solutions of Metallic Salts.

Deville: "The action of any salt whatever on aluminium may be easily deduced from the action of its acids on that metal. We may, therefore, predict that in acid solutions of sulphates and nitrates aluminium will precipitate no metal, not even silver, as Wöhler has observed. But the hydrochloric solutions of the same metal will be precipitated, as MM. Tissier have shown. Likewise, in alkaline solutions, silver, lead, and metals high in the classification of the elements are precipitated. It may be concluded from this that to deposit aluminium on other metals by means of the battery, it is always necessary to use acid solutions from which hydrochloric acid, free or combined, should be absent. For similar reasons the alkaline solutions of

* Zeitschr. für angewandte Chemie, 1890, No. 23.

the same metals cannot be employed, although they give such good results in plating common metals with gold and silver. It is because of these curious properties that gilding and silvering aluminium are so difficult."

These conclusions by Deville are confirmed only when using pure aluminium; the impure metal, containing iron, silicon, or perhaps sodium, may produce very slight precipitates in cases where pure aluminium would produce none. Some observers have noted different results in some cases even when using aluminium free from these impurities. We will therefore take up these cases and consider them separately.

Mercury.—* Aluminium decomposes solutions of mercuric chloride, cyanide or nitrate, mercury separating out first, then forming an amalgam with the aluminium which is immediately decomposed by the water, the result being alumina and mercury. From an alcoholic solution of mercurous chloride the mercury is precipitated more quickly at a gentle heat. A solution of mercurous iodide with potassium iodide is also reduced in like manner.

Copper.—* From solution of copper sulphate or nitrate, aluminium separates out copper only after two days' standing, as either dendrites or octahedra; from the nitrate it also precipitates a green, insoluble basic salt. Copper is precipitated immediately from a solution of cupric chloride; but slower from the solution of copper acetate. The sulphate or nitrate solutions behave similarly if potassium chloride is also present, and the precipitation is complete in presence of excess of aluminium.

Silver.—* From a nitrate solution, feebly acid or neutral, aluminium precipitates silver in dendrites, the separation only beginning after six hours' standing. From an ammoniacal solution of silver chloride or chromate, aluminium precipitates the silver immediately as a crystalline powder. Cossa confirms the statement as to the nitrate solution.

Lead.—* From nitrate or acetate solution the lead is slowly

* Dr. Mierzinski.

precipitated in crystals; an alkaline solution of lead chromate gives precipitates of lead and chromic oxide.

Zinc.—* An alkaline solution of zinc salt is readily decomposed and zinc precipitated.

Margottet states that all metallic chlorides excepting those of potassium or sodium are reduced from solution. This statement can hardly include chlorides of magnesium or lithium, since magnesium precipitates alumina from solutions of aluminium salts. Alkaline or ammoniacal solutions are more easily decomposed than acid solutions; in alkaline solutions the cause being the facility with which aluminates of the alkalies are formed.

Alkaline Chlorides.—A solution of sodium or potassium chlorides is not appreciably affected by pure aluminium, either cold or warm. However, rather impure aluminium which was packed in a case with saw-dust and kept wet with sea-water for two weeks was corroded; whether the result would have been the same without the presence of the saw-dust or with purer aluminium, I cannot say.

Aluminium Salts.—It is a curious fact that a solution of aluminium chloride will attack aluminium, forming a basic-chloride with evolution of hydrogen. A solution of alum does not attack aluminium, but if sodium chloride is added it is dissolved with evolution of hydrogen. It is interesting to note that while neither of these salts alone attacks aluminium, the mixture of the two does.

FLUORSPAR.

Fluorspar on being melted gives off a little hydroflouric acid vapor, caused by the action of the hydroscopic moisture in it. This vapor will attack aluminium, forming fluoride. Aside from this slight action, the molten fluorspar has no action on the aluminium. It has, however, the property of dissolving a small proportion (about 2 per cent.) of alumina, and this action causes it to be a very efficient flux, because small

* A. Cossa, Bull. de la Soc. Chim., 1870, p. 199.

globules of aluminium are usually encrusted with a thin film of alumina which prevents them from running together to a button. The fluorspar, by dissolving this coating and affording a fluid mass, fluxes the separated globules together. It is often used in connection with cryolite and common salt.

Cryolite.

Melted cryolite is a very good flux for aluminium, for the same reason as described under fluorspar. It can, however, dissolve over 20 per cent. of alumina, and is therefore that much more efficient as a fluxing agent. At a temperature above the melting point of copper it attacks the aluminium itself, if it is put into it finely divided, but the metal *en masse* is not sensibly attacked. The result of this attack must be the formation of a sub-fluoride, possibly AlF_2.

Silicates and Borates.

Neither of these classes of compounds can be used as fluxes or slags in working aluminium, since they both rapidly corrode the metal. Deville had little difficulty in decomposing these salts so completely with metallic aluminium that he isolated silicon and boron. If aluminium is melted in an ordinary glass vessel it attacks it, setting free silicon from silica, forming an aluminate with the alkali present and an alloy with the silicon set free. Aluminium melted under borax is rapidly dissolved, an aluminium borate being formed. It is thus seen that the common metallurgic slags are altogether excluded from the manufacture of aluminium, and also that it is an impossibility to manufacture pure aluminium direct from minerals containing silica. The result of reducing kaolin, for instance, would inevitably be highly siliceous aluminium, from which there is no known method of separating out pure aluminium. These facts also point to the importance of keeping molten aluminium from contact with the ordinary siliceous refractory materials in working it. Even the best quality plumbago crucibles will increase the percentage of silicon in commercial

aluminium at least 0.25 per cent. at one melting. Magnesia brick linings and magnesia-lined crucibles should be used for melting it in.

Nitre.

Deville: "Aluminium may be melted in nitre without undergoing the least alteration, the two materials rest in contact without reacting even at a red heat, at which temperature the salt is plainly decomposed, disengaging oxygen actively. But if the heat is pushed to the point where nitrogen itself is disengaged, there the nitre becomes potassa, a new affinity becomes manifest, and the phenomena change. The metal then combines rapidly with the potassa to give aluminate of potash. The accompanying phenomenon of flagration often indicates a very energetic reaction. Aluminium is continually melted with nitre at a red heat to purify it by the oxygen disengaged, without any fear of loss. But it is necessary to be very careful in doing it in an earthen crucible. The silica of the crucible is dissolved by the nitre, the glass thus formed is decomposed by the aluminium, and the silicide of aluminium formed is then very oxidizable, especially in the presence of alkalies. The purification by nitre ought to be made in an iron crucible well oxidized by nitre inside."

If finely divided aluminium is mixed with nitre and brought to a red heat, the metal is oxidized with the production of a fine blue flame. (Mierzinski.) Nitre is also used sometimes in the composition of aluminium flash-light powders.

Alkaline Sulphates and Carbonates.

Tissier: "Only 2.65 grammes of aluminium introduced into melted red-hot sodium sulphate (Na_2SO_4) decomposed that salt with such intensity that the crucible was broken into a thousand pieces, and the door of the furnace blown to a distance. Heated to redness with alkaline carbonate, the aluminium was slowly oxidized at the expense of the carbonic acid, carbon was set free, and an aluminate formed. The reaction takes place without deflagration."

METALLIC OXIDES.

Tissier Brothers made a series of experiments on the action of aluminium on metallic oxides. Aluminium leaf was carefully mixed with the oxide, the mixture placed in a small porcelain capsule and heated in a small earthen crucible, which served as a muffle. The results were as follows:

Manganese dioxide.—No reaction.

Zinc oxide.—No reaction even at white heat.

Ferric oxide.—By heating to white heat one equivalent of ferric oxide and three of aluminium, the reaction took place with detonation, and by heating sufficiently we obtained a metallic button, well melted, containing 69.3 per cent. of iron and 30.7 per cent. of aluminium. Its composition corresponds very nearly to the formula AlFe. It would thus appear that the decomposition of ferric oxide will not pass the limit where the quantity of iron reduced is sufficient to form with the aluminium the alloy AlFe.

Lead oxide.—We mixed two equivalents of litharge with one of aluminium, and heated the mixture slowly up to white heat, when the latter reacted on the litharge with such intensity as to produce a strong detonation. We made an experiment with fifty grammes of litharge and 2.9 grammes of aluminium leaf, when the crucible was broken to pieces and the doors of the furnace blown off.

Copper oxide.—Three grammes of black oxide of copper mixed with 1.03 grammes of aluminium detonated, producing a strong explosion, when the heat reached whiteness.

Bekétoff* reduced baryta (BaO) with metallic aluminium in excess, and obtained alloys of aluminium and barium containing in one case twenty-four per cent., in another thirty-three per cent. of barium.

If any of the metallic oxides are fluxed, as by being dissolved in cryolite, metallic aluminium reduces them to metal at once. Messrs. Green and Wahl have patented this method of

* Bull. de la Soc. Chimique, 1887, p. 22.

producing pure metallic manganese, which is at present being put into operation in Philadelphia on a commercial scale.

Miscellaneous Agents.

Phosphate of lime.—Tissier Brothers heated to whiteness a mixture of calcium phosphate with aluminium leaf, without the metal losing its metallic appearance or any reaction being noted.

Hydrogen.—This gas appears to have no action on aluminium, except to be dissolved in it in a moderately large quantity.

Chlorine.—Gaseous chlorine attacks the metal rapidly. Aluminium foil heated in an atmosphere of chlorine takes fire and burns with a vivid light.

Bromine, iodine, act similarly to chlorine.

Fluorine.—Fluorine gas forms a thin coating of fluoride which prevents a deeper attack. If the metal is at a dark-red heat, a violent incandescence ensues, and the attack is very energetic. Under the microscope the residue is seen to be globules of aluminium covered with uncrystallized fluoride.

Silver chloride.—Fused silver chloride is decomposed by aluminium, the liberated silver as well as the excess of aluminium being melted by the heat of the reaction.

Mercurous chloride.—If vapors of mercurous chloride are passed through a tube in which some hot aluminium is placed, mercury is separated out, aluminium chloride deposits in the cooler part of the tube, and the aluminium is melted by the heat developed.

Carbonic oxide.—Aluminium acts on this gas, forming alumina and setting free carbon. Prof. Arnold proved this by taking molten steel of a known content of carbon, and after adding to it several per cent. of aluminium, he passed a current of this gas through it for one hour. A sample of the metal subsequently analyzed showed one-third more carbon than before the treatment. This reaction is one of the causes of the advantage of adding aluminium to molten steel, as it thus removes one of the gases which form blow-holes in the castings.

CHAPTER V.

PROPERTIES AND PREPARATION OF ALUMINIUM COMPOUNDS.

In this chapter we propose to note in rather condensed form the prominent characteristics of the various aluminium compounds, with an outline of the methods by which they can be produced, reserving for another chapter, however, the preparation of those salts which are now being manufactured on a commercial scale for purposes of further treatment for aluminium. I do not propose this as a substitute for the various chemical treatises on this subject, but simply to add to the completeness of this work in order that a fair understanding of the other parts of the book may not be missed because data of this nature are not immediately at hand. Parts of this chapter are taken from M. Margottet's treatise on aluminium, in Fremy's Enclycopédie Chimique.

General Considerations.

Position of aluminium in the periodic classification of the elements.—Mendeléeff places aluminium in his third family of elements, it being preceded by boron, and followed by the rare elements scandium, gallium, yttrium, indium, didymium, erbium and thallium. These elements all form oxides of the same general form, R_2O_3, and their other chemical compounds are correspondingly similar. As we have zinc, cadmium and mercury as the analogues of magnesium in the second group, so we have gallium, indium and thallium as the corresponding analogues of aluminium in the third group. Unfortunately, these elements are so rare that we are not so familiar with their properties as we could wish. We can notice, however, that as the atomic weight increases the specific gravity and the atomic

volume increase also, while the compounds formed by these metals become more easily decomposable. For instance:

Element.	Atomic Weight.	Specific Gravity.	Atomic Volume.
Boron	11	2.5	4.5
Aluminium	27	2.7	10
Gallium	70	5.9	12
Indium	113	7.4	14
Thallium	204	11.8	17

Structure of aluminium compounds.—Aluminium has until recently been regarded as a quadrivalent element, for the reason that no compound was known whose molecule contained less than two atoms of aluminium combined with six atoms of a monovalent element. Thus, the oxide was Al_2O_3, the chloride Al_2Cl_6, etc. It was, therefore, supposed that in the molecule of every aluminium compound the two atoms of aluminium were held together by an exchange of one bond, and since each atom had three bonds left over, it was supposed that each single aluminium atom had four bonds or affinities. The composition of the oxide and chloride were therefore represented graphically as follows:

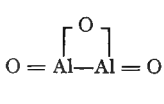

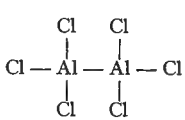

The two atoms of aluminium, having six free affinities, were spoken of as a "double hexad-atom."

All this reasoning, however, has broken down since the discovery of compounds containing only one atom of aluminium in a molecule, and in which the aluminium is undoudtedly trivalent; such are the organic salts $Al(CH_3)_3$, $Al(C_2H_5)_3$, $Al(C_5H_7O_2)_3$. In the latter salt, the vapor density corresponds to the formula given at only 45° above its melting point. Even aluminium chloride itself has been proven to have the formula $AlCl_3$ when its vapor density is taken at a temperature above 800°. We are therefore constrained to drop the former

ideas, and consider aluminium as tri-valent. The graphic formulæ given above must then be written

The tri-valency of aluminium is also required by its position in the list of elements. Thus we have, taking the elements immediately preceding and following it:

	Atomic Weight.	Valence in organic salts
Sodium	23	1
Magnesium	24	2
Aluminium	27	3
Silicon	28	4
Phosphorus	31	3
Sulphur	32	2
Chlorine	35½	1

Aluminium acts as a feeble base or a rather strong acid. As a base it has many analogies with iron in ferric compounds. For instance, the oxides Al_2O_3 and Fe_2O_3 crystallize in the same forms, rhombohedra, with almost exactly the same fundamental angles, while the native hydrous oxides $Al_2O_3.H_2O$ and $Fe_2O_3.H_2O$, both crystallize in the orthorhombic system with very similar angles and cleavages. As an acid, it forms compounds analogous to ferric and chromic acids. For instance:

Aluminate of iron	$FeAl_2O_4$.
Ferrate " "	$FeFe_2O_4$.
Chromate " "	$FeCr_2O_4$.

These all crystallize in isometric octahedra, and are in every respect very similar minerals. The salts in which aluminium acts as an acid are called aluminates. They may be written as salts of aluminic acid, $H_2Al_2O_4$, but there are other aluminates known having a smaller proportion of alumina, and it is much more convenient to express the composition of all these aluminates by the dualistic method. Thus, there are known to exist (see Bayer's method of treating bauxite, next chapter.)

$Al_2O_3.Na_2O.$
$Al_2O_3.2Na_2O.$
$Al_2O_3.3Na_2O.$
$Al_2O_3.6Na_2O.$

the writing of which formulæ by the rationalistic method would be very cumbersome.

The normal or neutral salts of aluminium as a base may be regarded as the acid with its hydrogen replaced by aluminium. Thus:

Acid.	Salt.
$3HCl$	$AlCl_3$
$3C_2H_4O_2$	$Al(C_2H_3O_2)_3$
$3H_2SO_4$	$Al_2(SO_4)_3$
$H_3P_2O_4$	AlP_2O_4

Aluminium, however, has a great tendency to form basic salts when these neutral salts are put in contact with an excess of aluminium or alumina. It is most convenient to write the formulæ of these by the dualistic method. Thus we have:

Normal sulphate, $Al_2O_3.3SO_3.16H_2O.$	Basic sulphate, $2Al_2O_3.SO_3.10H_2O.$
Normal acetate, $Al_2O_3.6C_2H_2O.$	Basic acetate, $Al_2O_3.2C_2H_2O.2H_2O.$

While the writer has no intention of going back to the dualistic theories which such formulæ were first used to represent, yet he takes the liberty of using these formulæ to represent the *empirical* composition of these salts, because of their convenience, and without attaching to them any theories as to the internal structure of the molecules.

General methods of formation and properties.—Hydrated alumina, which has not been too strongly heated, dissolves in strong acids, forming salts which are mostly soluble in water. In the feebler acids and in all organic acids it is completely insoluble. The salts of these latter acids are formed best by decomposing solution of aluminium sulphate with the barium or lead salt of the acid in question. Most aluminium salts are soluble in water and rather difficult to crystallize: the few insoluble salts are white, gelatinous, and similar to the hydrate

in appearance. In the neutral salts the acid is loosely held, for their solution strongly reddens litmus paper and their action is as if part of the acid were free in the salt. For instance, a solution of alum attacks iron giving off hydrogen, a soluble basic salt of aluminium being formed as well as sulphate of iron. The neutral salts of volatile acids give off acid simply by boiling their solutions, basic salts being formed. An aqueous solution of aluminium chloride loses its acid almost completely on evaporation. Gentle ignition is sufficient in most cases to completely decompose aluminium salts. Hydrated alumina dissolves easily in caustic alkali, forming soluble aluminates; with baryta two aluminates are known, one soluble, the other not; all other known aluminates are insoluble.

Chemical reactions.—Neutral solutions of aluminium salts react as follows with the common reagents:

Hydrogen sulphide produces no precipitate.

Ammonium sulphide precipitates aluminium hydrate with separation of free sulphur.

Caustic potash or soda precipitates aluminium hydrate, soluble in excess.

Aqua ammonia precipitates aluminium hydrate insoluble in excess, especially in presence of ammoniacal salts.

Alkaline carbonates precipitate aluminium hydrate insoluble in excess.

Sodium phosphate precipitates white gelatinous aluminium phosphate, easily soluble in acids or alkalies.

Before the blowpipe most aluminium compounds are infusible or are quickly converted into infusible alumina. In the light-colored, infusible compounds, the aluminium may be recognized by giving a beautiful, enamel-like blue color (Thenard's blue) when moistened with dilute solution of cobalt nitrate and ignited in a pure oxidizing flame. Light-colored fusible compounds will also give the same reaction, but in them the absence of silica, boric and phosphoric acids must be proven by other tests before the presence of aluminium can be asserted with certainty.

Aluminium Oxide.

Commonly called alumina. Composition Al_2O_3, and contains 52.95 per cent. of aluminium when perfectly pure. Colorless corundum is a natural pure alumina, in which state it is infusible at ordinary furnace heats, insoluble in acids, has a specific gravity of 4, and is almost as hard as the diamond. To get this into solution it must be first fused with potassium hydrate or bisulphate. The alumina made by igniting aluminium hydrate or sulphate is a white powder, easily soluble in acids if the ignition has been gentle, but becoming almost insoluble if the heat has been raised to whiteness. The specific gravity of this ignited alumina also varies with the temperature to which it has been raised; if simply to red heat, it is 3.75; if to bright redness, 3.8; and if to whiteness, 3.9. In the last case it acquires almost the hardness of corundum. It can be melted to a clear, limpid liquid in the oxyhydrogen blow-pipe; after cooling it forms a clear glass, often crystallized. Small artificial crystals of alumina, exactly similar to the natural ones, have been obtained by dissolving powdered alumina in fused boric oxide and then volatilizing the latter by an intense heat. Fluorine gas acts energetically on powdered alumina. As soon as it comes in contact, the whole mass becomes incandescent, forming a fluoride and disengaging oxygen. The reaction

$$Al_2O_3 + 6F = 2AlF_3 + 3O.$$

disengages 1,100 calories of heat per kilogramme of fluorine acting. Gaseous chlorine does not act on it even at redness, but if carbon is present at the same time aluminium chloride is formed. Similarly, although neither carbon nor sulphur, alone or mixed together, acts on alumina, carbon bisulphide converts it into aluminium sulphide.

The preparation of alumina for commercial purposes is described at length in the next chapter.

Aluminium Hydrates.

There are three natural hydrates of aluminium, which may be briefly described as follows:

Diaspore, formula $Al_2O_3.H_2O$ or $Al_2O_2.(OH)_2$, containing 85 per cent. of alumina, occurs in crystalline masses as hard as quartz, with a specific gravity of 3.4. Bauxite, approximately of the formula $Al_2O_3.2H_2O$ or $Al_2O.(OH)_4$, with the aluminium replaced by variable quantities of iron. If perfectly pure, it would contain 74 per cent. of alumina. Hydrochloric acid re-removes from it only the iron; heated with moderately dilute sulphuric acid it gives up its alumina; a concentrated alkaline solution also dissolves the alumina. Calcined with sodium carbonate it forms sodium aluminate without melting. Gibbsite, formula $Al_2O_3.3H_2O$ or $Al_2(OH)_6$, containing, when pure sixty-five per cent. of alumina, is a mineral generally stalactitic, white, and with a specific gravity of 2.4. It loses two-thirds of its water at 300° and the rest at redness.

The artificial hydrates are of two kinds, the soluble and insoluble modifications. The latter is the common hydrate, such as is obtained by adding ammonia to a solution containing aluminium. The precipitate is pure white, very voluminous, and can be washed free from the salts with which it was precipitated only with great difficulty. Its composition is $Al_2(OH)_6$, corresponding to the mineral gibbsite. It is insoluble in water, but easily soluble in dilute acids or alkali solutions. It dissolves in small quantity in ammonia, but the presence of ammonia salts counteracts this action. When dissolved in caustic potash or soda the addition of ammoniacal salts reprecipitates it. It loses its water on heating, in the same manner as gibbsite. Many other properties of this hydrate, and its manufacture on a large scale, are given in the next chapter. The soluble modification can only be made by complicated processes, too long to be described here, and is principally of use in the dyeing industries; a full description can be found in any good chemical dictionary.

ALUMINATES.

Potassium aluminate.—Formula $K_2Al_2O_4$, crystallizes with three molecules of water, the crystals containing forty per cent. alumina, 37.5 per cent. potassa and 21.5 per cent. of water. It is formed when precipitated alumina is dissolved in caustic potash, or by melting together alumina and caustic potash in a silver dish and dissolving in water. If the solution is evaporated in vacuo, brilliant hard crystals separate out. They are soluble in water but insoluble in alcohol.

Sodium aluminate has not been obtained crystallized. Obtained in solution by dissolving alumina in caustic soda or by fusing alumina with caustic soda or sodium carbonate and dissolving in water. If single equivalents of carbonate of soda and alumina are used, the aluminate seems to have the composition $Na_2Al_2O_4$; if an excess of soda is used, the solution appears to contain $Al_2(ONa)_6$, or $Al_2O_3.3Na_2O$. Dr. Bayer thinks that $Al_2O_3.2Na_2O$ and $Al_2O_3.6Na_2O$ are also possible in solution. If a solution of sodium aluminate is concentrated to 20° or 30° B., alumina separates out; if carbonic acid gas is passed through it, aluminium hydrate is precipitated. For a description of its manufacture on a large scale, see next chapter.

Barium aluminate.—Formula $BaAl_2O_4$. Deville prepared it by calcining a mixture of nitrate or carbonate of barium with an excess of alumina, or by precipitating sulphate of aluminium in solution by baryta water in excess. The aluminate is soluble in about ten times its weight of water and crystallizes out on addition of alcohol. The crystals contain four molecules of water. Gaudin obtained it by passing steam over a mixture of alumina and barium chloride, or of alumina, barium sulphate, and carbon, at a red heat. Tedesco claimed that by heating to redness a mixture of alumina, barium sulphate, and carbon, barium aluminate was extracted from the residue by washing with water. He utilized this reaction further by adding solution of alkaline sulphate, barium sulphate being precipitated

(which was used over), while alkaline aluminate remained in solution.

Calcium aluminate.—Lime water precipitates completely a solution of potassium or sodium aluminate, insoluble gelatinous calcium aluminate being formed, of the formula $Al_2(O_6Ca_3)$ or $Al_2O_3.3CaO$. At a red heat it melts to a glass, which, treated after cooling with boiling solution of boric acid, affords a compound appearing to contain $2Al_2O_3.3CaO$. (Tissier.) Lime water is also completely precipitated by hydrated alumina, the compound formed having the composition $CaAl_2O_4$ or $Al_2O_3.CaO$. Also, by igniting at a high temperature an intimate mixture of equal parts of alumina and chalk, Deville obtained a fused compound corresponding to the formula $CaAl_2O_4$.

Zinc aluminate occurs in nature as the mineral Gahnite, formula $ZnAl_2O_4$. Berzelius has remarked that when a solution of zinc oxide in ammonia and a saturated solution of alumina in caustic potash are mixed, a compound of the two oxides is precipitated, which is redissolved by an excess of either alkali.

Copper aluminate.—On precipitating a dilute solution of sodium aluminate with an ammoniacal solution of copper sulphate, the clear solution remaining contained neither copper nor aluminium. Whether the precipitate contained these combined as an aluminate I did not determine.

Magnesium aluminate occurs in nature as Spinel; *iron aluminate* as Hercynite; *beryllium aluminate* as Chrysoberyl. The first mentioned has been lately proven to exist in small quantities in crystallized blast-furnace slags.* Ebelman has also prepared it in small crystals by dissolving alumina and magnesia in fused boric oxide and driving off some of the solvent by intense heat.

Aluminium Chloride.

Formula $AlCl_3$, contains 20.2 per cent. of aluminium. The commercial chloride is often yellow or even red from the presence of iron, but the pure salt is quite white. It absorbs water

* P. W. Shimer. Journal Am. Chemical Soc., 1894, p. 501.

very rapidly from the air. It usually sublimes without melting, especially when in small quantity, but if a large mass is rapidly heated, it may melt and even boil, but its melting point is very close to its boiling point. Friedel and Crafts have determined the melting point as 178°, boiling point 183°. When sublimed it deposits in brilliant, hexagonal crystals. A current of steam rapidly decomposes it into alumina and hydrochloric acid. Oxygen disengages chlorine from it at redness, but decomposes it incompletely. Potassium or sodium decomposes it explosively, the action commencing below redness. Anhydrous sulphuric acid converts it into aluminium sulphate. Aluminium chloride combines with many other chlorides, forming the double salts.

On dissolving this salt in water, or by dissolving alumina in hydrochloric acid, a solution is obtained which on evaporation deposits crystals having the formula $AlCl_3.6H_2O$. If these crystals are heated, they decompose, losing both water and acid and leaving alumina. Thus it is not possible to obtain anhydrous aluminium chloride by evaporating its solution, and the anhydrous salt must be made by other methods, detailed at length in the next chapter.

Aluminium-Sodium Chloride.

Formula $AlCl_3.NaCl$ contains 14 per cent. of aluminium. The commercial salt is often yellow or brown from the presence of ferric chloride, but the pure salt is perfectly white. Its melting point has been generally stated to be 180°, but Mr. Baker, chemist for the Aluminium Company of London, states that when the absolutely pure salt is warmed it melts at 125° to 130°. That chemists should for thirty years have made an error of this magnitude seems almost incredible, and it would be satisfactory if Mr. Baker would advance some further information than the bare statement above. This salt volatilizes at a red heat without decomposition. It is less deliquescent in the air than aluminium chloride, and for this reason is much easier to handle on a large scale. It is recently stated that the

absolutely pure salt deteriorates less than the impure salt in the air, and the inference is drawn that perhaps the greater deliquescence of the impure salt is due to the iron chlorides present. Its solution in water behaves similarly to that of aluminium chloride; it cannot be evaporated to dryness without decomposition, the residue consisting of alumina and sodium chloride.

The manufacture of this double salt on a large scale is described in the next chapter. It may be prepared in the laboratory by melting a mixture of the two component salts in the proper proportions. A similar salt with potassium chloride may be prepared by exactly analogous reactions.

Aluminium-Phosphorus Chloride.

Formula $2AlCl_3.PCl_5$, contains 9 per cent. of aluminium. It is a white salt, easily fusible, volatilizes only about 400° and sublimes slowly, fumes in the air and is decomposed by water. Produced by heating the two chlorides together or by passing vapor of phosphorus perchloride over alumina heated to redness.

Aluminium-Sulphur Chloride.

Formula $2AlCl_3.SCl_4$, contains 12.2 per cent. of aluminium. It forms a yellow crystalline mass, fuses at 100°, may be distilled without change, and is decomposed by water. May be obtained by distilling a mixture of aluminium chloride and ordinary sulphur chloride, SCl_2.

Aluminium-Selenium Chloride.

Formula $2AlCl_3.SeCl_4$. Obtained by heating the separate chlorides together in a sealed tube, when on careful distillation the less volatile double chloride remains. It is a yellow mass, melting at 100° and decomposed by water.

Aluminium-Ammonium Chloride.

Formula $2AlCl_3.3NH_3$. Solid aluminium chloride absorbs ammonia in large quantity, the heat developed liquefying the

resulting compound. It may be sublimed in a current of hydrogen, but loses ammonia thereby and becomes $2AlCl_3.NH_3$.

Aluminium-Chlor-sulphydride.

Formed by subliming aluminium chloride in a current of hydrogen sulphide. A current of hydrogen removes the excess of the gas used, leaving on sublimation fine colorless crystals. In air it deliquesces rapidly and loses hydrogen sulphide.

Aluminium-Chlor-phosphydride.

Apparently of the formula $6AlCl_3.PH_3$. If phosphuretted hydrogen is passed over cold aluminium chloride very little is absorbed, but at its subliming point it absorbs a large quantity, the combination subliming and depositing in crystals. It is decomposed by water or ammonium hydrate, disengaging hydrogen phosphide.

Aluminium Bromide.

Formula $AlBr_3$, containing 10.1 per cent. of aluminium. It is colorless, crystalline, melts at 93° to a clear fluid which boils at 260°. It is still more deliquescent than aluminium chloride. At a red heat in contact with dry oxygen, it evolves bromine and forms alumina; it is also decomposed slowly by the oxygen of the air. It dissolves easily in carbon bi-sulphide, the solution fuming strongly in the air. It reacts violently with water, the solution on evaporation depositing the compound $AlBr_3.6H_2O$. The same result is attained by dissolving alumina in hydrobromic acid and evaporating. This hydrated chloride is decomposed by heat, leaving alumina. The specific gravity of solid aluminium bromide is 2.5.

This compound is obtained by heating aluminium and bromine together to redness, or by passing bromine vapor over a mixture of alumina and carbon at bright redness.

Aluminium Iodide.

Formula AlI_3, containing 6.6 per cent. of aluminium. This

compound is a white solid, fusible at 125°, and boils at 350°. It dissolves easily in carbon bisulphide, the warm saturated solution depositing it in crystals on cooling. It dissolves also in alcohol and ether. Its behavior towards water is exactly analogous to that of aluminium bromide. It is prepared by heating iodine and aluminium together, with special precautions to avoid explosion.

Aluminium Fluoride.

Formula AlF_3, containing 32.7 per cent. of aluminium. It is sometimes obtained in crystals which are colorless and slightly phosphorescent. They are insoluble in acids, even in boiling sulphuric, and boiling solution of potash scarcely attacks them; they can only be decomposed by fusion with sodium carbonate at a bright red heat. Melted with boric acid, aluminium fluoride forms crystals of aluminium borate. L. Grabau describes the aluminium fluoride which he obtains in his process as being a white powder, unalterable in air, unaffected by keeping, insoluble in water, infusible at redness, but volatilizing at a higher temperature.

Deville first produced this compound by acting on aluminium with silicon fluoride at a red heat. He afterwards obtained it by moistening pure calcined alumina with hydrofluoric acid, drying and introducing into a tube made of gas carbon, protected by a refractory envelope. The tube was heated to bright redness, a current of hydrogen passing through meanwhile to facilitate the volatilization of the fluoride. Brunner demonstrated that aluminium fluoride is formed and volatilized when hydrofluoric acid gas is passed over red-hot alumina. Finally, if a mixture of fluorspar and alumina is placed in carbon boats, put into a carbon tube, suitably protected, heated to whiteness and gaseous hydrofluoric acid passed over it, aluminium fluoride will volatilize and condense in the cooler part of the tube in fine cubical crystals, while calcium fluoride remains in the boats.

Aluminium Fluorhydrate.

When calcined alumina or kaolin is treated with hydrofluoric acid, alumina being in excess, soluble fluorhydrate of aluminium is formed, which deposits on evaporating the solution. It has the formula $2AlF_3.5H_2O$, and easily loses its water when heated.

Aluminium–Hydrogen Fluoride.

If to a strongly acid solution of alumina in hydrofluoric acid alcohol is added, an oily material separates out and crystallizes, having the formula $3AlF_3.2HF.5H_2O$. If the acid solution is simply evaporated, acid fumes escape and a crystalline mass remains which, washed with boiling water and dried, has the formula $4AlF_3.HF.10H_2O$. On heating these compounds to 400° or 500° in a current of hydrogen, pure amorphous aluminium fluoride remains. The acid solution of alumina first used seems to contain an acid of the composition $AlF_3.3HF$, which is capable of forming salts with other bases. Thus, if this solution is neutralized with a solution of soda, a precipitate of artificial cryolite, $AlF_3.3NaF$, falls. The similar potash compound is formed in the same way.

Aluminium–Sodium Fluoride.

Formula $AlF_3.3NaF$, containing 12.85 per cent. of aluminium, occurs native as cryolite, a white mineral with a waxy appearance, as hard as calcite, specific gravity 2.9, melting below redness and on cooling looking like opaque, milky glass. If kept melted in moist air, or in a current of steam, it loses hydrofluoric acid and sodium fluoride and leaves a residue of pure alumina. When melted it is decomposable by an electric current or by sodium or magnesium. It is insoluble in water, unattacked by hydrochloric but decomposed by hot sulphuric acid. The native mineral is contaminated with ferrous carbonate, silica, phosphoric and vanadic acids. An extended description of its utilization, manufacture, etc., will be found in the next chapter.

A native compound having the formula $3AlF_3.5NaF$ is snow-white, very similar to cryolite in appearance and properties, except that it crystallizes in a different form and is more fusible. It is called Chiolite. The mineral Pachnolite is also similar, except that part of the sodium is displaced by calcium.

Aluminium Sulphide.

Formula Al_2S_3, containing 36 per cent. of aluminium. The pure salt is light yellow in color and melts at a high temperature. In damp air it swells up and disengages hydrogen sulphide, forming a grayish white powder; it decomposes water very actively, forming hydrogen sulphide and ordinary gelatinous aluminium hydrate. Steam decomposes it easily, at red heat forming amorphous alumina, which is translucent and very hard. Gaseous hydrochloric acid transforms it into aluminium chloride. Elements having a strong affinity for sulphur reduce it, setting free aluminium, but it is doubtful if hydrogen or carburetted hydrogen has this effect.

It may be formed by throwing sulphur into red-hot aluminium, or by passing sulphur vapor over red-hot aluminium. Traces only of aluminium sulphide are formed by passing hydrogen sulphide over ignited alumina, but carbon-bisulphide vapor readily produces this reaction. For details of its formation see next chapter.

Double sulphides of aluminium and sodium or potassium, similar in composition to the double chlorides, may be made by melting the two sulphides together, or, more easily, by adding sodium or potassium carbonate to the ignited alumina which is in process of conversion into sulphide. These salts are easily fusible and nearly unchangeable in the air, but a more detailed description of them is wanting. They are said to be quite suitable for electrolytic decomposition. (See Bucherer's electrolytic process.)

Aluminium sulphide has recently come into use in chemical laboratories as a very convenient means of generating hydrogen sulphide. A London chemical firm manufactures it by stirring

aluminium into molten sulphide of lead; the lead separating out sinks to the bottom, while the aluminium sulphide floats. The sulphide is sold at $0.60 per pound, and is said to generate the gas as cheaply as by the ordinary methods.

Aluminium Selenide.

When aluminium is heated in selenium vapor, the two elements combine with incandescence, producing a black powder. In the air this powder evolves the odor of hydrogen selenide; in contact with water it disengages that gas abundantly, and furnishes a red deposit of selenium along with aluminium hydrate. When a solution of an aluminium salt is treated with an alkaline poly-selenide, a flesh-colored precipitate falls, the composition of which is not known, which is decomposed at redness, leaving aluminium.

Aluminium Borides.

AlB_2, containing 55.1 per cent. of aluminium, was first obtained by Deville and Wöhler by heating boron in contact with aluminium, or by reducing boric acid with the latter metal, the action not being long continued. Also, if a current of boron trichloride with carbonic oxide is passed over aluminium in boats in a tube heated to redness, aluminium chloride volatilizes and there remains in the boats a crystalline mass, cleavable, and covered with large hexagonal plates of a high metallic lustre. To remove the aluminium present in excess, the mass is treated with hydrochloric acid and then with caustic soda. The final residue is composed of hexagonal tablets, very thin but perfectly opaque, of about the color of copper. These crystals do not burn in the air, even if heated to redness, but their color changes to dark-gray. They burn in a current of chlorine, giving chlorides of the two elements contained in them. They dissolve slowly in concentrated hydrochloric acid or in solution of caustic soda; nitric acid, moderately concentrated, attacks them quickly.

AlB_3, containing 45 per cent. of aluminium, has been ob-

tained by Hampe by heating aluminium with boric acid for three hours at a high temperature, carbon being carefully kept away. On cooling very slowly, the upper part of the fusion is composed of aluminium borate, the centre is of very hard alumina containing a few black crystals of aluminium boride, while at the bottom is a button of aluminium also containing these crystals. To free these crystals, the aluminium is dissolved by hydrochloric acid. These crystals are the compound sought for, and contain no other impurity than a little alumina, which can be removed by boiling sulphuric acid. These purified crystals are black, but are thin enough to show a dark-red by transmitted light. Their specific gravity is 2.5, they are harder than corundum, but are scratched by the diamond. Oxygen has no action on them at a high temperature, solution of caustic potash or hydrochloric acid does not attack them, boiling sulphuric acid has scarcely any action, but they dissolve completely in warm, concentrated nitric acid.

If the operation by which this product is made is conducted in the presence of carbon, the compound formed contains less aluminium and also some carbon. Its composition corresponds to the formula $Al_3C_2B_{48}$, containing about 12 per cent. of aluminium and 3.75 per cent. of carbon. The crystals of this compound are yellow and as brilliant as the diamond. Their specific gravity is 2.6, hardness between that of corundum and the diamond. They are not attacked by oxygen, even at a high temperature; hot hydrochloric or sulphuric acid attacks them only superficially, concentrated nitric acid dissolves them slowly but completely. They resist boiling solution of caustic potash or fused nitre, but take fire in fused caustic potash or chromate of lead.

Aluminium and Carbon.

Deville stated that he was unable to combine carbon with aluminium. On decomposing carbon tetrachloride by aluminium, ordinary carbon was formed, while the aluminium remaining was unchanged. The Cowles Company obtain in their

electric furnace, when reducing a mixture of alumina and carbon alone, a yellow, crystalline substance which was exhibited by Dr. T. Sterry Hunt,* as an alloy of aluminium and carbon, but that this is the case is not yet accepted as certain.

On dissolving impure aluminium in solution of caustic potash, a black residue was obtained which behaved, when filtered out and dried, partly like amorphous carbon. I have heard it stated that molten aluminium does not dissolve appreciable quantities of carbon, and that its properties are affected considerably thereby; but I am not able to give any further light on the subject than the above experiment, which seemed to show considerable carbon in an impure metal. This is a subject which needs thorough investigation.

Since the observation just given was made, in 1890, the fact that this residue does contain amorphous carbon has been established by Le Verrier (see p. 57), who has also confirmed Hunt's statements as to an aluminium carbide. Le Verrier states † that up to his own experiments this compound was unknown, but he must have been ignorant of Hunt's observations. The method used by Le Verrier was as follows: Little boats of carbon were filled with aluminium, put into a carbon tube through which a current of hydrogen was passed, and heated in the electric furnace. After cooling, the aluminium was of a grey color, and on breaking it was seen to be strewn with brilliant fine-yellow crystals. To separate these out, the aluminium is dissolved by concentrated hydrochloric acid, surrounding the vessel with ice to keep the temperature low. The residue is washed with ice-cold water. This whole operation must be conducted as quickly as possible, since the carbide is attacked by water.

The carbide thus prepared has a specific gravity, taken in benzine, of 2.36. It is decomposed in the highest heat of an electric furnace, attacked by chlorine at a red-heat, but only

* Halifax Meeting, Am. Ins. Mining Engineers, Sept. 16, 1885.

† Comptes Rendus, July, 1894, p. 16.

superficially by oxygen, since the layer of alumina formed protects the part underneath. Violently attacked by sulphur at that temperature, also by permanganate of potassium, bichromate of potassium, chromic acid and oxide of lead; potassium chlorate has no action. Caustic potash in fusion attacks it very energetically at about 300°. It slowly decomposes water in the cold with a very curious result, namely, the formation of methane gas, according to the reaction:

$$C_3Al_4 + 12H_2O = 3CH_4 + 4Al(OH)_3.$$

An analysis of these crystals gave the following result:

Aluminium.	Carbon.
74.48	23.5
75.12	24.2
74.7	24.7
74.9	24.8
75.7	

(Required by the formula Al_4C_3.)

75.4	24.6

Aluminium Nitride.

Formula AlN, containing 66 per cent. of aluminium, is formed when aluminium is heated in a carbon crucible to a high temperature. Mallet* obtained it unexpectedly when heating aluminium with dry sodium carbonate at a high heat, for several hours, in a carbon crucible. The aluminium is partially transformed into alumina, some sodium vaporizes, and some carbon is deposited. After cooling, there are found on the surface of the button little yellow crystals and amorphous drops, to recover which the whole is treated with very dilute hydrochloric acid. This product has the composition AlN. Calcined in the air it slowly loses nitrogen and forms alumina. It decomposes in moist air, loses its transparency, becomes a lighter yellow, and finally only alumina remains, the nitrogen

* Ann. der Chemie u. Pharmacie, 186, p. 155.

having formed ammonia. Melted with caustic potash it disengages ammonia and forms potassium aluminate.

Aluminium Sulphate.

Anhydrous.—The salt obtained by drying hydrated aluminium sulphate at a gentle heat has the formula $Al_2(SO_4)_3$, containing 15.8 per cent. of aluminium, and of a specific gravity of 2.67. By heating this salt several minutes over a Bunsen burner it loses almost all its acid, leaving alumina. Hydrogen likewise decomposes it at redness, forming water and sulphur dioxide and leaving alumina with hardly a trace of acid. Melted with sulphur, Violi states that it is transformed into aluminium sulphide, evolving sulphurous acid gas.* Hot hydrochloric acid in excess partly converts it into aluminium chloride.

Hydrated.—This is the ordinary aluminium sulphate; its formula is $Al_2(SO_4)_3.16H_2O$, and it contains 8.0 per cent. of aluminium, equal to 14.5 per cent. of alumina, and 47 per cent. of water. The pure salt is not hygroscopic. In the presence of impurities the amount of water increases to 18 H_2O and the salt becomes hygroscopic. It has a white, crystalline appearance, and tastes like alum. It dissolves freely in water, from which it crystallizes out at ordinary temperatures with the above formula; crystallized out at a low temperature it retains $27H_2O$, or one-half as much again. Water dissolves one-half its weight of this salt, the solution reacting strongly acid; it is almost insoluble in alcohol. At a gentle heat it melts in its water of crystallization, then puffs up and leaves a porous mass of anhydrous sulphate which is soluble with difficulty in water. If heated to redness it leaves only alumina. The salt with $16H_2O$ has a specific gravity of 1.76; it is the salt found in fibrous masses in solfataras, its mineralogical name being Halotrichite. A hydrated sulphate with $10H_2O$ is formed and precipitated when alcohol is added to an aqueous solution of alu-

* Berichte der Deutschen Chemischen Gesellschaft, X, 293.

minium sulphate. On heating it acts similarly to the other hydrated sulphates.

Basic.—On precipitating a solution of aluminium sulphate with alkaline hydrate or carbonate, a series of basic salts are formed. On precipitating with ammonia, the compound formed has the formula $Al_2O_3.SO_3.9H_2O$, corresponding to the mineral Aluminite. If the ammonia is in insufficient quantity to entirely precipitate the solution, a precipitate is very slowly formed having the formula $3Al_2O_3.2SO_3.20H_2O$. On precipitating a cold solution of alum by alkaline carbonate not in excess, a precipitate is very slowly formed having the formula $2Al_2O_3.SO_3.12H_2O$. If a very dilute solution of acetate of alumina is precipitated by adding potassium sulphate, a compound deposits very slowly having the formula $2Al_2O_3.SO_3.10H_2O$. Native minerals are met with of analogous composition to these precipitates: Felsobanyte, $2Al_2O_3.SO_3.10H_2O$; Paraluminite, $2Al_2O_3.SO_3.15H_2O$. By heating a concentrated solution of aluminium sulphate with aluminium hydrate, and filtering cold, the solution deposits on further cooling a gummy mass having the formula $Al_2O_3.2SO_3.xH_2O$. On washing with water it deposits a basic salt having the formula $Al_2O_3.SO_3$. By letting stand a very dilute solution of sulphuric acid completely saturated with aluminium hydrate, Rammelsberg obtained transparent crystals having the formula $3Al_2O_3.4SO_3.30H_2O$. On boiling a solution of aluminium sulphate with zinc, Debray obtained a granular precipitate having the formula $5Al_2O_3.3SO_3.20H_2O$. By leaving zinc a long time in a cold solution of aluminium sulphate, a gelatinous precipitate was obtained having the formula $4Al_2O_3.3SO_3.36H_2O$; the same compound was formed if the zinc was replaced by calcium carbonate.

The manufacture of aluminium sulphate from clay, aluminous earths, cryolite, bauxite, etc., is carried on industrially on a very large scale; descriptions of the processes used may be found in any work on industrial chemistry—they are too foreign to metallurgical purposes to be treated of here.

ALUMS.

Under this name are included a number of double salts containing water, crystallizing in octahedra and having the general formula $R'_2SO_4.R_2(SO_4)_3.24H_2O$, in which the first R may be potassium, sodium, rubidium, cäesum, ammonium, thallium or even organic radicals; the second R may be aluminium, iron, manganese or chromium; the acid may even be selenic, chromic or manganic, instead of sulphuric. We will briefly describe the most important alums consisting of double sulphates of aluminium and another metal, remarking, as with aluminium sulphate, that their preparation may be found at length in any chemical treatise.

POTASH ALUM.

Formula $K_2SO_4.Al_2(SO_4)_3.24H_2O$, containing 10.7 per cent. of alumina or 5.7 per cent. of aluminium. Dissolves in 25 parts of water at 0° and in two-sevenths part at 100°. The solution reacts acid. It forms colorless, transparent octahedrons, insoluble in alcohol. On exposure to air they become opaque, being covered with a white coating, which is said not to be efflorescence—a loss of water—but to be caused by absorption of ammonia from the air. The crystals melt in their water of crystallization, but lose it all above 100°. Heated to redness it swells up strongly, becomes porous and friable, giving the product called *calcined alum;* at whiteness it loses a large part of its sulphuric acid, leaving a residue of potassium sulphate and alumina. If it is mixed with one-third its weight of carbon and calcined, the residue inflames spontaneously in the air. If a mixture of alumina and bisulphate of potassium is fused and afterwards washed with warm water, a residue is obtained of anhydrous alum, or $K_2SO_4.Al_2(SO_4)_3$. The mineral Alunite is a basic potash alum, $K_2SO_4.3(Al_2O_3.SO_3).6H_2O$.

AMMONIA ALUM.

Formula $(NH_4)_2SO_4.Al_2(SO_4)_3.24H_2O$, containing 11.3 per cent. of alumina or 6.0 per cent. of aluminium. Dissolves in

20 parts of water at 0° and in one-fourth part at 100°. When heated, the crystals swell up strongly, forming a porous mass, losing at the same time water and sulphurous acid; if the temperature is high enough there remains a residue of pure alumina. The temperature necessary for complete decomposition is higher than that required for volatilizing ammonium sulphate alone.

Soda Alum.

Formula $Na_2SO_4.Al_2(SO_4)_3.24H_2O$, containing 11.1 per cent. of alumina or 5.9 per cent. of aluminium. Dissolves in an equal weight of water at ordinary temperatures. The crystals effloresce and fall to powder in the air. It is insoluble in absolute alcohol. On account of its great solubility in water it cannot be separated from ferrous sulphate by crystallization, and therefore it is either contaminated with much iron or else, to be obtained pure, special expensive methods must be adopted. These difficulties cause the manufacture of soda alum to be insignificant in amount when compared with potash alum.

Aluminium-Metallic Sulphates.

Sulphate of aluminium forms double sulphates with iron, manganese, magnesium and zinc, but these compounds are not analogous to the alums. They are extremely soluble in water, do not crystallize in octahedrons or any isometric forms, and their composition is different from the alums in the amount of water of crystallization. It has heen determined that the double sulphates with manganese and zinc contain 25 equivalents of water, which would permit their being considered as combinations of sulphate of aluminium, $Al_2(SO_4)_3.18H_2O$, with a sulphate of the magnesian series containing seven equivalents of water, as $ZnSO_4.7H_2O$.

Aluminium Selenites.

By adding a solution of selenite of soda to one of sulphate of aluminium maintained in excess, an amorphous, voluminous

precipitate forms, having the composition $4Al_2O_3.9SeO_2.3H_2O$. This substance decomposes on being heated, leaving alumina. If varying quantities of selenious acid are added to this first salt, other salts of the formulas $Al_2O_3.3SeO_2.7H_2O$, $2Al_2O_3.9SeO_2.12H_2O$, $Al_2O_3.6SeO_2.5H_2O$, are formed. These are mostly insoluble in water and decompose on being heated, like the first.

Aluminium Nitrate.

Formula $Al(NO_3)_3.9H_2O$ is obtained on dissolving aluminium hydrate in nitric acid. If the solution is evaporated keeping it strongly acid, it deposits on cooling voluminous crystals having the formula $2Al(NO_3)_3.15H_2O$. This salt is deliquescent, melts at 73° and gives a colorless liquid which, on cooling, becomes crystalline. It is soluble in water, nitric acid, and alcohol; on evaporating these solutions it is obtained as a sticky mass. It is easily decomposed by heat; if kept at 100° for a long time it loses half its weight, leaving as residue a soluble salt of the formula $2Al_2O_3.3N_2O_5.3H_2O$. Carried to 140°, this residue loses all its nitric acid, leaving alumina. On this property is based a separation of alumina from lime or magnesia, since the nitrates of these latter bases resist the action of heat much better than aluminium nitrate.

Aluminium Antimonate.

$Al_2O_3.3Sb_2O_5.15H_2O$ can be prepared by double decomposition from potassium antimonate and a soluble aluminium salt. It deposits from solution after several days' standing in shining, microscopic crystals. At 100° it loses $5H_2O$, at 150°, $2\frac{1}{2}$ H_2O more, at 200° it retains only $3H_2O$ and becomes incandescent. $Al_2O_3.Sb_2O_5.9H_2O$ has been also described.

Aluminium Phosphates.

The normal phosphate, $AlPO_4$, is obtained as a white, gelatinous precipitate when a neutral aluminium solution is treated with sodium phosphate. It is soluble in alkalies or mineral acids, but not in acetic acid. If a solution of this salt in acids is

neutralized with ammonia, a basic phosphate is precipitated having the composition $3Al_2(OH)_3PO_4+2Al(OH)_3$. The mineral Wavellite has this composition, with nine molecules of water. The mineral Kalait contains $AlPO_4+Al(OH)_3+H_2O$, and when it is colored azure blue by a little copper it forms the Turquois. Aluminium meta-phosphate has the formula AlP_3O_9 or $Al_2O_3.3P_2O_5$.

Aluminium Carbonate.

If to a cold solution of alum a cold solution of sodium carbonate is added drop by drop, stirring constantly until the solution reacts feebly alkaline, a precipitate is obtained which, after being washed with cold water containing carbonic acid gas, contains when damp single equivalents of alumina and carbonic acid, $Al_2O_3.CO_2$. If the precautions indicated are not used, the precipitate contains a very small proportion of carbonic acid.

Sestini * states that one litre of water saturated with carbonic acid gas at the ordinary atmospheric pressure will dissolve 10 milligrammes of alumina, the solution becoming turbid on boiling or agitation. This reaction is probably the key to the understanding of the geological formation of native alumina deposits.

When a solution of sodium bi-carbonate is added to one of sodium aluminate, a double carbonate of the alkali and aluminium is precipitated, which is easily soluble in acids. (Mendeléeff.)

Aluminium Borate.

Formula $3Al_2O_3.BO_3$. Prepared by Ebelman by heating together alumina, oxide of cadmium, and boric acid. After three days' heating the platinum capsule containing the mixture was found covered with transparent crystals of the above composition, hard enough to scratch quartz and having a specific gravity of 3. Troost obtained the same substance by heating alumina in the vapor of boron trichloride. Fremy prepared it by heating fluoride of aluminium with boric acid.

* Gazetta Chim., Vol. 20, p. 313.

Ebelman also obtained it by heating a mixture of alumina and borax to whiteness; under these conditions crystals of corundum were formed at the same time.

By precipitating a cold solution of alum with sodium borate, double salts are obtained containing soda, but which leave on washing with warm water two compounds having the formulæ $2Al_2O_3.BO_3.5H_2O$ and $3Al_2O_3.2BO_3.8H_2O$. If the washing is prolonged too far the two salts are completely decomposed, leaving a residue of pure alumina.

Aluminium Silicates.

These compounds are very plentiful in nature, both hydrous and anhydrous. The addition of a soluble aluminium salt to a solution of sodium silicate would doubtless produce a precipitate of aluminium silicate. Many of the native silicates have been formed by the mingling of lime or alkaline water with cabonated water carrying alumina in solution. In the native silicates the silica and alumina occur in many proportions; the following ratios of alumina to silica have been observed: 2–1, 3–2, 1–1, 2–3, 1–2, 1–3, 1–4, 1–8, thus varying from tri-basic silicates to pent-acid silicates. The pure silicates of aluminium alone are infusible before the blowpipe; but the presence of other elements, especially the alkalies, calcium or iron, makes them quite easy to melt. Ordinary blast-furnace slags are silicates of aluminium, calcium and magnesium, and vary from bi-acid to sesqui-basic silicates. In some of these more basic silicates part of the aluminium present may exert its acid character, and, in fact, the occurrence of crystals of magnesium aluminate has been noted in crystallized blast-furnace slag which was basic and rich in magnesium.

CHAPTER VI.

PREPARATION OF ALUMINIUM COMPOUNDS FOR REDUCTION.

WE will consider this division under four heads:—

I. Alumina.
II. Aluminium chloride and aluminium-sodium chloride.
III. Aluminium fluoride and aluminium-sodium fluoride.
IV. Aluminium sulphide.

I.

THE PREPARATION OF ALUMINA.

We will treat this subject in three divisions:—

1. From Aluminium Sulphate or Alums.
2. From Bauxite.
3. From Cryolite.

1. PREPARATION OF ALUMINA FROM ALUMS OR ALUMINIUM SULPHATE.

Hydrated alumina can be precipitated from a solution of any aluminium salt by ammonium hydrate, an excess of which redissolves a portion. Its chemical formula is ordinarily written $Al_2O_3.3H_2O$ or $Al(OH_3)$. The aluminium hydrate thus precipitated is a pure white, very voluminous, almost pasty mass, very hard to wash. By boiling and washing with boiling water it becomes more dense, but always remain very voluminous. Washing on a filter with a suction apparatus gives the best results. At a freezing temperature this hydrate changes into a dense powder which is more easily washed. On drying, it shrinks very much in volume and forms dense, white pieces, transparent on the edges. When dried at ordinary temperatures it has the composition $Al_2O_3.H_2O$. On ignition, the

other molecule of water is driven off, leaving anhydrous alumina. After gentle ignition it remains highly hygroscopic, and in a very short time will take up from the air 15 per cent. of water. In this condition it is easily soluble in hydrochloric or sulphuric acid. On stronger ignition it becomes harder and soluble only with difficulty in concentrated acid; after ignition at a high temperature it is insoluble, and can only be brought into solution again by powdering finely and fusing with potassium acid-sulphate or alkaline carbonate. At ordinary furnace temperatures alumina does not melt, but in the oxy-hydrogen blow-pipe or the electric arc it fuses to a limpid liquid and appears crystalline on cooling.

The precipitation in aqueous solution and subsequent ignition is not economical enough to be practised on a large scale, and for industrial purposes the aluminium sulphate or alum is ignited directly. About the easiest way to proceed is to take ammonia alum crystals, put them into a clean iron pan and heat gently, when the salt melts in its water of crystallization. When the water has evaporated, a brittle, shining, sticky mass remains, which on further heating swells up and decomposes into a dry, white powder. This is let cool, powdered, put into a crucible and heated to bright redness. All the ammonia and almost all the sulphuric acid are thus removed. The rest of the acid can be removed by moistening the mass with a solution of sodium carbonate, drying and again igniting; on washing with water the acid is removed as sodium sulphate. The residue, however, will contain some caustic soda, which for its further use in making aluminium chloride is not harmful. Potash alum can be treated in a similar way, the potassium sulphate being washed away after the first ignition. Still more easily and cheaply can alumina be made by igniting a mixture of 4 parts aluminium sulphate and 1 of sodium carbonate. On washing, sodium sulphate is removed from the alumina.*

Deville used the following method at Javel: Ammonia alum or

* Kerl and Stohman, 4th Ed., p. 739.

even the impure commercial aluminium sulphate was calcined, the residue appearing to be pure, white alumina, but it still contained sulphuric acid, potassium sulphate, and a notable proportion of iron. This alumina is very friable, and is passed through a fine sieve, and put into an iron pot with twice its weight of solution of caustic soda of 45 degrees. It is then boiled and evaporated, and the alumina dissolves even though it has been strongly calcined. The aluminate of soda produced is taken up in a large quantity of water, and if it does not show clear immediately, a little sulphuretted hydrogen is passed in, which hastens the precipitation of the iron. The liquor is let stand, the clear solution decanted off and subjected while still warm to the action of a stream of carbonic acid gas. This converts the soda into carbonate and precipitates the alumina in a particularly dense form which collects in a space not one-twentieth of the volume which would be taken up by gelatinous alumina. This precipitate is best washed by decantation, but a large number of washings are necessary to remove all the sodium carbonate from it; it is even well, before finishing the washing, to add a little sal-ammoniac to the wash-water in order to hasten the removal of the soda. The well-dried alumina is calcined at a red heat.

Tilghman* decomposes commercial sulphate of alumina, $Al_2(SO_4)_3.18H_2O$, by filling a red-hot fire-clay cylinder with it. This cylinder is lined inside with a magnesia fettling, is kept at a red heat, the sulphate put in in large lumps, and steam is passed through the retort, carrying with it vapor of sodium chloride. This last arrangement is effected by passing steam into a cast-iron retort in which the salt named is kept melted, and as the steam leaves this retort it carries vapor of the salt with it. It is preferable, however, to make a paste of the sulphate of alumina and the sodium chloride, forming it into small hollow cylinders, which are well dried, and then the fire-clay cylinder filled with these. Then, the cylinder being heated to

* Mierzinski.

whiteness, highly superheated steam is passed over it. The hydrochloric acid gas which is formed is caught in a condensing apparatus, and there remains a mass of aluminate of soda, which is moistened with water and treated with a current of carbon dioxide and steam. By washing the mass, the soda goes into solution and hydrated alumina remains, which is washed well and is ready for use.

Mr. Webster's process for making pure alumina at a low price was incorporated as a part of the Aluminium Co. Ld.'s processes. The only description we can give of it is dated 1883.

* Three parts of potash alum are mixed with one part of pitch, placed in a calcining furnace and heated to 200° or 250°. About 40 per cent. of this water is thus driven off, leaving sulphate of potash and aluminium, with some ferric oxide. After heating about three hours, the pasty mass is taken out, spread on a stone floor, and when cold broken to pieces. Hydrochloric acid (20 to 25 per cent.) is poured upon these pieces, placed in piles, which are turned over from time to time. When the evolution of sulphuretted hydrogen has stopped, about five per cent. of charcoal-powder or lampblack, with enough water to make a thick paste, is added. The mass is thoroughly broken up and mixed in a mill, and then worked into balls of about a pound each. These are bored through to facilitate drying, and heated in a drying chamber at first to 40°, then in a furnace from 95° to 150°. The balls are then kept for three hours at a low red heat in retorts, while a mixture of two parts steam and one part air is passed through, so that the sulphur and carbon are converted into sulphurous oxide and carbonic oxide, and thus escape. The current of gas carries over some potassium sulphate, ferrous sulphate and alumina, and is therefore passed through clay condensers.

The residue in the retorts consists of alumina and potassium sulphate; it is removed, ground to fine powder in a mill,

* Austrian Patent, Sept. 28, 1882; English patent, No. 2580, 1881. Dingler, 1883, vol. 259, p. 86.

treated with about seven times its weight of water, boiled in a pan or boiler by means of steam for about one hour, then allowed to stand till cool. The solution containing the potassium sulphate is run off and evaporated to dryness, the alumina is washed and dried. The potassium sulphate, as a by-product, is said to pay one-half the cost of the process.

This deposit contains about 84 per cent. of alumina, while that obtained by the old process of precipitation has only 65 per cent. Thus a large saving is effected in cost, and 19 per cent. more alumina is obtained. In addition to this, the whole of the by-products are recovered, consisting of potassium sulphate, sulphur (which is used in making sulphuric acid), and aluminate of iron.

2. Preparation of Alumina from Bauxite.

At Salindres, the alumina used in the Deville process was obtained from bauxite by the following processes, which are in general use for extracting pure alumina from this mineral. Bauxite is plentiful enough in the south of France, principally in the departments of Herault, Bouches-du-Rhone, and Var. It contains as much as seventy-five per cent. alumina. To separate the alumina from ferric oxide, it is treated with carbonate of soda, under the influence of a sufficiently high temperature, the alumina displacing the carbonic acid and forming an aluminate of soda, $Al_2O_3.3Na_2O$, while the ferric oxide remains unattacked. A simple washing with water then permits the separation of the former from the insoluble ferric oxide. The bauxite is first finely pulverized by means of a vertical mill-stone, then intimately mixed with some sodium carbonate. The mixture is made, for one operation, of—

480 kilos. bauxite.
300 " sodium carbonate of 90 alkali degrees.

This mixture is introduced into a reverberatory furnace, resembling in form a soda furnace, and which will bear heating

strongly. The mass is stirred from time to time, and it is kept heated until all the carbonate has been attacked, which is recognized by a test being taken which does not effervesce with acids. The operation lasts from five to six hours.

The aluminate thus obtained is separated from ferric oxide by a washing with warm water. This washing is made at first with a feeble solution which has served for the complete exhaustion of the preceding charge, which was last washed with pure water, forming thus this feeble solution. This gives, on the first leaching, solutions of aluminate concentrated enough to be called strong liquor, which are next treated by the current of carbonic acid gas to precipltate the hydrated alumina. The charge is next washed with pure water, which completely removes the aluminate; this solution is the weak liquor, which is put aside in a special tank, and used as the first leaching liquor on the next charge treated. This treatment takes place in the following apparatus (see Fig. 1): *B* is a sheet-iron vessel, in the middle of which is a metallic grating, *F*, on which is held all round its edges, by pins, a cloth, serving as a filter. *A* ought to be closed by a metallic lid held on firmly by bolts. To work the apparatus, about 500 kilos of the charge to be washed is placed on the filter cloth, the lid is closed, then the steam-cock *f* of the reservoir *A* is opened. In *A* is the weak solution from the last washing of the preceding charge. The pressure of the steam makes it rise by the tube *T* into the filter; another jet of steam, admitted by the cock *b*, rapidly warms the feeble liquor as it soaks into the charge. After filtering through, the strong liquor is drawn off by turning the stop-cock *G*. The weak solution of the reservoir *A* is put into the filter in successive portions, and not all at once; and after each addition of solution has filtered through, its strength in B.° is taken, before any more solution is run in; then, when the solution marks 3° to 4°, it is placed in a special tank for weak liquor, with all that comes through afterwards. Just about this time, the weak liquor of the reservoir *A* is generally all used up, and is replaced by pure water introduced by the tube *d*. All

the solutions which filtered through marking over 3° to 4° B., are put together, and form a strong liquor which marks about 12° B. This extraction of the aluminate being completed by the pure water, the residue on the filter is taken out, and a new operation may be commenced.

FIG. 1.

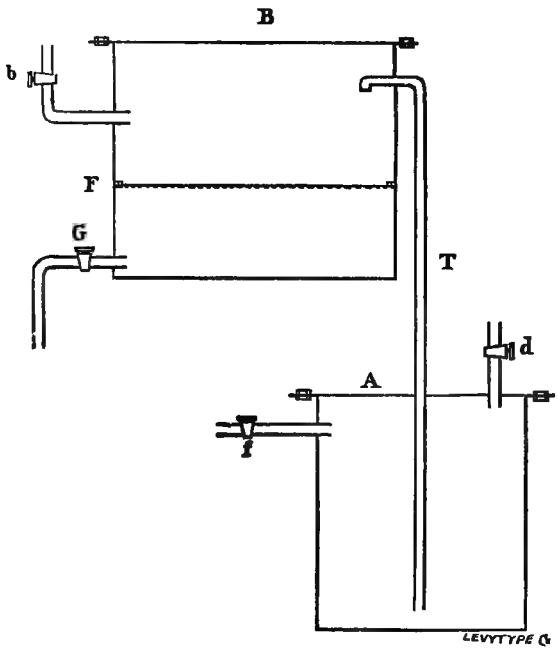

The strong liquor is introduced into a vessel having an agitator, where a strong current of carbonic acid gas may precipitate the alumina from it. The gas is produced by small streams of hydrochloric acid continuously falling on some limestone contained in a series of earthenware jars. The precipitation vessel is called a baratte. The carbonic acid after having passed through a washing-flask, is directed to a battery of three barattes, where the precipitation is worked methodically, so as to precipitate completely the alumina of each baratte, and util-

ize at the same time all the carbon dioxide produced. In order to do this, the gas always enters first into a baratte in which the precipitation is nearest completion, and arrives at last to that in which the solution is freshest. When the gas is not all absorbed in the last baratte, the first is emptied, for the precipitation in it is then completed, and it is made the last of the series, the current being now directed first into the baratte which was previously second, while the newly charged one is made the last of the series. The process is thus kept on continuously. The apparatus used is shown in Fig. 2,

FIG. 2.

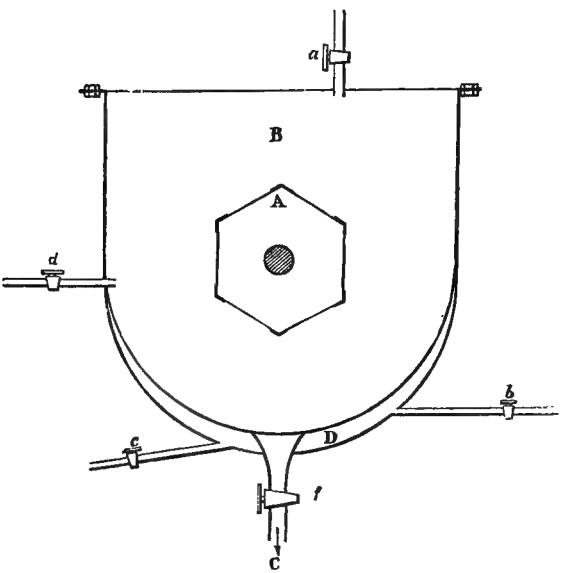

a. Charging pipe. *b*. Steam pipe. *c*. Steam drip. *d*. CO_2 enters. *f*. Discharge pipe. *A*. Agitator, made of iron rods. *C*. Tank in which the precipitate settles. *B*. Baratte body. *D*. Steam jacket.

Each baratte holds about 1200 litres of solution, and the complete precipitation of all the alumina in it takes five to six hours. A mechanical agitator stirs the contents continually, and a current of steam is let into the double bottom so as to

keep the temperature of the solution about 70°. The precipitated alumina and the solution of sodium carbonate which remain are received in a vat placed beneath each baratte. The solution is decanted off clear, after standing, and then evaporated down to dryness, regenerating the sodium carbonate used in treating the bauxite to make the aluminate, less the inevitable losses inseparable from all industrial operations. The deposit of alumina contains considerable sodium carbonate mechanically intermixed, and is put into a conical strainer to drain, or else into a centrifugal drying machine, which rapidly drives out of the hydrated alumina most of the solution of sodium carbonate which impregnates it; a washing with pure water in the drier itself terminates the preparation of the alumina. At the works at Salindres, a part of this alumina is converted into sulphate of alumina, which is sold, the remainder being used for the aluminium manufacture. After washing in the drier, the alumina presents this composition:—

Alumina	47.5
Water	50.0
Sodium carbonate	2.5

Behnke* produces alumina by igniting bauxite or a similar mineral with sodium sulphate, carbon, and ferric oxide, using for each equivalent of alumina present at least one equivalent of alkali and one-half an equivalent of ferric oxide. The mixture is heated in a muffle or reverberatory furnace. The fritted product is ground, exposed to the air, and washed with water. Sodium aluminate goes into solution along with some sodium sulphate, while ferrous sulphide and undecomposed material remains as a residue. By passing carbonic acid gas or gases from combustion through the solution, the alumina is precipitated. The residue spoken of is roasted, the sulphurous oxide given off utilized, and the residue used over in place of fresh ferric oxide.

R. Lieber† proposes to treat bauxite, aluminous iron ore,

* German Patent (D. R. P.), No. 7256.

† German Patent (D. R. P.), No. 5670.

etc., in a somewhat similar way. These materials are to be ground fine, mixed with sodium chloride and magnesium sulphate (Kieserite), moistened with water, and pressed into bricks or balls. These are dried and put into a retort heated red-hot by generator gas. Hydrochloric acid gas is first given off, sodium sulphate and magnesium chloride being formed. In a further stage of the process sulphurous oxide is evolved, the alumina reacting on the sodium sulphate to form sodium aluminate. The latter is washed out of the residue, and its alumina precipitated by the ordinary methods.

H. Muller* proposes to extract the alumina from silicates containing it by mixing them with limestone, dolomite, or magnesite, also with alkali caustic, carbonate, or sulphate (in the last case also with carbon), and heating the mixture to bright-redness. Alkaline aluminate is washed out of the resulting mass, while the residue, consisting of lime, magnesia, iron oxide, etc., is mixed wifh water-glass and moulded into artificial stone.

Common salt is said not to react on bauxite if fused with it alone, but will decompose it if steam is used. Tilghman† first used this reaction in 1847. It is said that it was also used at Nanterre and Salindres previously to 1865. A mixture of sodium chloride and bauxite was treated in a closed retort and steam passed through, or, better, in a reverberatory furnace and steam passed over it, at a high temperature. Much sodium chloride must have been lost by the latter arrangement. The fused mass was treated with water, when sodium aluminate dissolved out.

R. Wagner‡ proposed to make a solution of sodium sulphide, by reducing sodium sulphate by carbon bisulphide, and to boil the bauxite in it. The sulphuretted hydrogen evolved was to be absorbed by ferric hydrate; while the sodium aluminate

* German Patent (D. R. P.), No. 12,947.

† Polytechnisches Journal, 106, p. 196.

‡ Wagner's Jahresb., 1865, p. 332.

was converted into soda and alumina by any of the ordinary methods.

Laur, a manufacturer of alumina in the south of France, has attempted to use sodium sulphate instead of the carbonate, in calcining bauxite. He finds it disadvantageous to exclude the carbonate altogether, but uses for a bauxite containing 20 per cent. of ferric oxide and 60 per cent. of alumina, about 66 of sodium sulphate and 16 of sodium carbonate per 100 of bauxite. Carbon must also be mixed with the charge. Under these conditions the ferric oxide present is first reduced to iron, which finally becomes iron sulphide. The soda from both the carbonate and the sulphate combines with the alumina to form aluminate. An excess of soda is necessary to keep the aluminate in solution, and to keep the sulphide of iron out of solution. The rest of the process is similar to that already described at Salindres.

According to Löwig's experiments, solution of sodium aluminate can be precipitated by calcium, barium, strontium, or magnesium hydrates, forming caustic soda and hydrated alumina, the latter being precipitated, together with lime, baryta, strontia, or magnesia. The precipitate is washed by decantation, and then divided into two portions, one of which is dissolved in hydrochloric acid, the other made into a mush with water, and gradually added to the solution of the first half until the filtrate shows only a very little alumina in solution. Chloride of calcium, barium, strontium, or magnesium has been formed, and the alumina all precipitated.

Dr. K. J. Bayer has made an improvement in the process of extracting alumina from bauxite, which has received great commendation from those directly interested in the business, and who may be supposed to have proved its merits. Dr. Bayer thus describes it:* Bauxite is fused with sodium carbonate or sulphate, and the solution obtained by washing, containing sodium aluminate, is not decomposed by carbonic

* Stahl und Eisen, Feb. 1889, p. 112.

acid, as formerly, but by the addition of aluminium hydrate with constant stirring. The decomposition of the solution goes on until the quantity of alumina remaining in solution is to the sodium protoxide as 1 to 6. This preciptation takes place in the cold, and the pulverulent aluminium hydrate separted out is easily soluble in acids. The alkaline solution remaining is concentrated by evaporation, taken up by ground bauxite, dried, calcined, and melted, and thus goes through the process again. The use of this caustic soda solution containing alumina is thus much more profitable than using soda, because by using the latter only 75 per cent. of the bauxite used is utilized, whereas by the former all the alumina dissolved by the solution is obtained again.

3. Preparation of Alumina from Cryolite.

By the Dry Way.—The following method was invented by Julius Thomson; the description is taken principally from Mierzinski's "Fabrikation des Aluminiums:" The cryolite is pulverized, an easy operation, and to every 100 parts, 130 to 150 parts of chalk are added, and a suitable quantity of fluorspar is also used, which remains in the residue on washing after ignition. More chalk is used than is theoretically necessary, in order to make the mass less fusible and keep it porous. But, to avoid using too much chalk merely for this purpose, a certain quantity of coke may be put into the mixture. It is of the first importance that the mixture be very intimate and finely pulverized. It is of greater importance that the mixture be subjected to just the proper well-regulated temperature while being calcined. The cryolite will melt very easily, but this is to be avoided. On this account, the calcination cannot take place in an ordinary smelting furnace, because, in spite of stirring, the mass will melt at one place or another, while at another part of the hearth it is not even decomposed, because the heat at the fire-bridge is so much higher than at the farther end of the hearth. Thomson constructed a furnace for this special purpose (see Figs. 3 and 4), in which the flame from

the fire first went under the bed of the furnace, then over the charge spread out on the bed, and finally into a flue over the roof of the hearth. The hearth has an area of nearly 9 square metres, being 4 metres long and 2.5 metres wide. It is charged

FIG. 3.

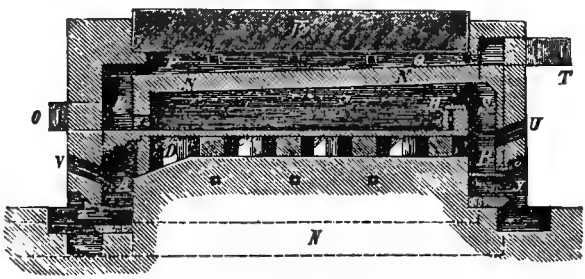

twelve times each day, each time with 500 kilos of mixture, thus roasting 6000 kilos daily, with a consumption of 800 kilos of coal. The waste heat of the gases escaping from the furnace

FIG. 4.

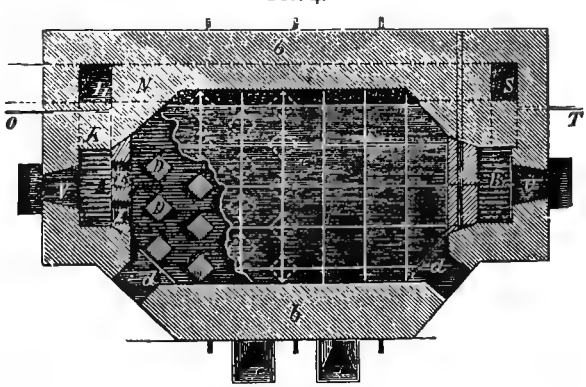

is utilized for drying the soda solution to its crystallizing point, and the gases finally pass under an iron plate on which the chalk is dried. In this furnace the mass is ignited thoroughly without a bit of it melting, so that the residue can be fully washed with water.

The decomposition takes place according to the formula—

$$2(AlF_3.3NaF) + 6CaCO_3 = Al_2O_3.3Na_2O + 6CaF_2 + 6CO_2,$$

the resultant product containing aluminate of soda, soluble in water, and insoluble calcium flouride. The reaction commences at a gentle heat, but is not completed until a red heat is reached. Here is the critical point of the whole process, since a very little raising of the temperature above a red heat causes it to melt. However, it must not be understood that the forming of lumps is altogether to be avoided. These lumps would be very hard and unworkable when cold, but they can be broken up easily while hot, so that they may be drawn out of the furnace a few minutes before the rest of the charge is removed, and broken up while still hot without any trouble. The whole charge, on being taken out, is cooled and sieved, the hard lumps which will not pass the sieve are ground in a mill and again feebly ignited, when they will become porous and may be easily ground up. However, the formation of these lumps can be avoided by industrious stirring of the charge in the furnace. A well-calcined mixture is porous, without dust and without lumps which are too hard to be crushed between the fingers. We would here remark that mechanical furnaces of similar construction to those used in the manufacture of soda, potash, sulphate of soda, etc., are more reliable and give the best results if used for this calcination. The mixture, or ashes, as the workmen call it, is drawn still hot, and washed while warm in conical wooden boxes with double bottoms, or the box may have but one bottom, with an iron plate about 76 millimetres above it. A series of such boxes, or a large apparatus having several compartments, may be so arranged that the washing is done methodically, *i. e.*, the fresh water comes first in contact with a residue which is already washed nearly clean, and the fresh charge is washed by the strong liquor. This is known as the "Lessiveur méthodique," and an apparatus constructed especially for this purpose is described in Dingler **186,** 376, by P. J. Havrez, but the subject is too general and the de-

scription too long to be given here. A very suitable washing apparatus is also the Buff-Dunlop, used in the soda industry for washing crude soda, and described in Lunge's "Sulphuric Acid and Alkali," Book II., p. 465. Since the ashes are taken warm from the furnace the washing water need not be previously heated, but the final wash-water must be warmed, as the ashes have been cooled down by the previous washings. As soon as the strong liquor does not possess a certain strength, say 20° B., it is run over a fresh charge and so brought up. The solution contains sodium aluminate.

The carbon dioxide necessary for precipitating the hydrated alumina may be made in different ways. The gases coming from the furnace in calcining the cryolite might be used if they were not contaminated with dust; and there is also the difficulty that exhausting the gases from the furnace would interfere with the calcination. It has also been recommended to use the gases from the fires under the evaporating pans, by exhausting the air from the flues and purifying it by washing with water. This can only be done where the pans are fired with wood or gas. However, the lime-kiln is almost exclusively used to furnish this gas. The kiln used is shaped like a small blast furnace. Leading in at the boshes are two flues from five fire-places built in the brickwork of the furnace, and the heat from these calcines the limestone. The gases are taken off by a cast-iron down-take at the top. At the bottom of the furnace, corresponding with the tap hole in a blast furnace, is an opening, kept closed, from which lime is withdrawn at intervals. A strong blast is blown just above the entrance of the side flues, and by keeping up a pressure in the furnace, leakings into it may be avoided. The gas is sucked away from the top by a pump, which forces it through a cleaning apparatus constructed like a wash-bottle, and it is then stored in a gasometer. Instead of the pump, a steam aspirator may be used, which is always cheaper and takes up less room.

The precipitation with carbonic acid gas is made by simply forcing it through a tube into the liquid. The apparatus used

at Salindres is one of the most improved forms. (See p. 140.) The precipitate is granular, and settles easily. However, it is not pure hydrated alumina, but a compound of alumina, soda, carbonic acid, and water, containing usually about—

Alumina	45 per cent.
Sodium carbonate	20 "
Water	35 "

The sodium carbonate must be separated by long-continued boiling with water, but by this treatment the alumina becomes gelatinous and difficult of further treatment. The precipitate was formerly separated on linen filters, but centrifugal machines are now preferred. The evaporated solution gives a high grade of carbonate of soda free from iron. The heavy residue which is left after the ashes have been lixiviated consists of calcium fluoride with small quantities of ferric oxide, lime, undecomposed cryolite, and aluminate of soda, and has not been utilized for any purpose.

R. Biederman* states that if steam is passed over molten cryolite at a white heat, hydrofluoric acid gas and sodium fluoride are formed and driven over, while a white, pure crystalline mass of alumina remains.

Utilization of aluminous fluoride slags.—At Nanterre, Deville used the following process for utilizing in one operation the slags from the aluminium manufacture and the residues from the sodium manufacture.

"The slags from making aluminium contain 60 per cent. of sodium chloride and 40 per cent. of insoluble matter; the former can be removed by a single washing. The insoluble material is almost entirely aluminium fluoride, with a little alumina and undecomposed cryolite. When fluorspar is used as a flux, the sodium chloride in the slag is in part replaced by calcium chloride; but, in general, all the fluorine in the slag is found combined with the aluminium, which shows the great affinity between these two elements. The residues left in the

* Kerl and Stohman, 4th Ed., p. 819.

sodium retorts deteriorate quickly when exposed to the air, and contain ordinarily, according to my analysis—

Carbon	20.0
Carbonate of soda	14.5
Caustic soda	8.3
Sulphate of soda	2.4
Carbonates of lime and iron	29.8
Water	25.0
	100.0

"To utilize these two materials, 5 to 6 parts of the sodium residues are mixed carefully with one part of the washed slag, and the whole calcined at a red heat. The fusion becomes pasty; it is cooled and washed, when aluminate of soda goes into solution, and on treatment with carbon dioxide gives sodium carbonate and alumina. According to my laboratory experiments—

1000 grammes of sodium residues
160 " " washed slags

have given

110 grammes of calcined alumina
225 " " dry sodium carbonate.

"The residue left on washing the fusion weighs about one-half the weight of the soda residues used, and contains—

Carbon	30.0
Calcium fluoride	32.0
Alumina	0.6
Various other materials	37.4

"The latter item is formed of ferric oxide, oxide of manganese, a little silica and some oxysulphide of calcium."

Decomposition of Cryolite in the Wet Way.—Deville used the following method at Javel, which he thus describes;—

"In the Greenland cryolite there are to be found numerous pieces containing siderite (ferrous carbonate). It is necessary

to extract all these pieces before using the mineral as a flux in producing aluminium. The rejected fragments are then utilized by pulverizing them finely, mixing with about three-fourths of their weight of pure, burnt lime and the whole carefully slaked. After the slaking, water is added in large quantity, and the material is heated in a large cast-iron vessel by means of a steam-coil. A reaction takes place at once, and is complete if the process is well conducted. Some insoluble aluminate of lime may be formed, but it can be recovered from the residue by digesting it with some solution of carbonate of soda. The residue remaining is calcium fluoride, which settles easily, and the clear liquor decanted off contains aluminate of soda, from which alumina can be precipitated as before. The calcined alumina obtained may contain iron when the cryolite used contains a large amount of ferrous carbonate. It has appeared to me that the latter mineral may be decomposed by the lime, and some protoxide of iron be thus dissolved by the soda in small quantity."

"We make alumina by this method at Nanterre only because it utilizes the impure pieces of cryolite and works in conveniently with the previously-described processes for utilizing the slags."

An ingenious modification of the above process was devised by Sauerwein. The first reaction is the same, five parts of finely-powdered cryolite being boiled with four parts of burnt lime, as free as possible from iron, producing a solution of sodium aluminate and a residue of insoluble calcium fluoride. Tissier recommended using two parts of cryolite to one of lime, but with these proportions only about one-third of the aluminium in the cryolite is converted into soluble aluminate. Hahn claims that complete decomposition takes place by using 100 parts of cryolite to 88 parts of burnt lime. The solution is settled, washed by decantation, and these washings put with the strong solution first poured off; the next washings are reserved for the fresh wash-water of another operation. The solution of sodium aluminate is then boiled with a quantity of cryolite

equal to the amount first used, when sodium fluoride is formed and alumina precipitated. This operation is in no way difficult, only requiring a little more attention than the first. The alumina thus made is very finely divided. The reactions involved are:

$$2(AlF_3.3NaF) + 6CaO = Al_2O_3.3Na_2O + 6CaF_2.$$
$$2(AlFF_3.3NaF) + Al_2O_3.3Na_2O + 6H_2O = 2(Al_2O_3.3H_2O) + 12NaF.$$

During the last operation it is best to add an excess of cryolite, and keep the liquid in motion to prevent that mineral from caking at the bottom. Lead is the best material to make these precipitating tanks of, since iron would contaminate the alumina. The precipitate is washed as in the previous operation. The solution of sodium fluoride is boiled with the requisite quantity of burnt lime, which converts it into caustic soda, NaOH, which is separated from the precipitated calcium fluoride by decantation and washing.

In the establishment of Weber, at Copenhagen, where at one time all the cryolite produced in Greenland was received, the mineral was decomposed by acid. Hydrochloric acid attacks the mineral slowly, but sulphuric acid immediately dissolves the sodium fluoride, with disengagement of hydrofluoric acid; gelatinous aluminium fluoride separates out, and is attacked more slowly. The cryolite requires nearly 1½ parts of sulphuric acid to dissolve it, the reaction being:

$$2(AlF_3.3NaF) + 6H_2SO_4 = Al_2(SO_4)_3 + 3Na_2SO_4 + 12HF.$$

The solution is evaporated and crystallized, when the sodium sulphate crystallizes out, and the mother liquid is treated for its alumina. This method is too costly, when compared with more recent processes, to be used at present.

According to Schuch* very finely-powdered cryolite is dissolved by a large excess of hot dilute soda solution, but is thrown down unaltered when carbonic acid gas is passed through

* Polytechnisches Journal, 165, p. 443.

the solution. An excess of concentrated soda liquor converts the mineral into sodium aluminate and sodium fluoride, the former being soluble but the latter almost insoluble in the soda solution.

II.

The Preparation of Aluminium Chloride and Aluminium-Sodium Chloride.

Anhydrous aluminium chloride cannot be made by evaporating the solution of alumina in hydrochloric acid, for, as we have seen, decomposition of the salt sets in, hydrochloric acid is evolved and alumina remains. The same phenomena occur on evaporating a solution of the double chloride. These anhydrous chlorides are prepared by a method discovered by Oerstedt, applicable to producing a number of similar metallic chlorides, which consists in passing a current of dry chlorine gas over an ignited mixture of alumina and carbon.

Wöhler* proceeded as follows in preparing the aluminium chloride which was used in his early experiments: "Alumina is mixed with charcoal powder and made plastic with oil. Cylinders of about 5 millimetres diameter are made of this paste, placed in a crucible with charcoal powder and heated until no more combustible gases distil. After cooling the crucible the cylinders are taken out, and a porcelain or glass tube open at both ends filled with them. This is then placed in a combustion furnace, connected at one end with a chlorine generator, and at the other with a tubular extension from the further end of which the gases escape, either into the air or into a flask filled with milk of lime. When the whole apparatus is ready, and filled with well-dried chlorine gas, the tube is heated to glowing, when aluminium chloride is formed and condenses in the extension of the tube."

Deville paid great attention to the production and purifica-

* Pogg. Ann., 11, p. 146.

tion of aluminium chloride; the following is his account of the processes used at Javel:

Manufacture on a Small Scale.—"I took 5 kilos of alumina and mixed it with 2 kilos of carbon and a little oil; the paste was made into balls and ignited at a bright-red heat. The compact, coke-like mass resulting was broken in pieces and put, with its powder, into a stoneware retort, *C* (Fig. 5), having a capacity of about 10 litres, and terminating in a neck,

FIG. 5.

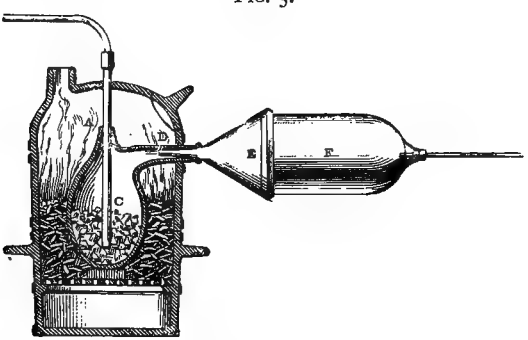

D. This retort was put in a furnace and heated to redness, while a current of dry chlorine gas passed in by the tube *A*. During the first few moments considerable quantities of water vapor escape from the neck. When aluminium chloride distils, as is shown by dense, white fumes, a porcelain or stoneware funnel, *E*, is adjusted to the neck *D*, and kept in place by filling the joint with fine asbestos and then luting it over with a little potter's clay mixed with hair. Against this funnel fits a globular vessel, *F*, the joint being made tight in a similar way. This apparatus condenses and holds all the chloride distilled. However fast the chlorine may pass into the retort, it is so well absorbed during three-fourths of the operation that not a trace is mixed with the carbonic oxide escaping. However, the gas always fumes a little, because of a small quantity of silicon chloride being formed by the chlorine and carbon attacking the sides of the retort, or from chloride of sulphur or a little chlor-

oxycarbonic acid. When the globe *F* is filled it is taken away to extract the coherent, crystalline aluminium chloride it contains, and is replaced immediately by another. During one operation three jars were thus filled, and altogether a little over 10 kilos of chloride obtained. In the retort there remained almost a kilo of coke mixed with alumina in the proportion of two of carbon to one of alumina, making 330 grammes of the latter remaining unattacked out of 5 kilos. This coke contains also some double chloride of alumina and potassium and a little calcium chloride, which render it deliquescent. This residue was washed, mixed with a fresh quantity of alumina, and employed in a new operation."

Manufacture on a large scale.—"In applying this process on a large scale, the oil and carbon were replaced by tar, the alembic by a gas-retort, and the glass receiver by a small brick chamber lined with glazed tiles. The alumina was obtained by calcining ammonia alum in iron pots; the residue obtained by one calcination at a bright-red heat was mixed with pitch, to which a little charcoal dust was added. The paste was well mixed, introduced into iron pots, covered carefully and heated until all vapors of tar ceased burning. The aluminous carbon is used while it is still hot, if possible, as it is quite hygroscopic. (This aluminous carbon conducts electricity wonderfully well; it is the best electrode to use in making aluminium by the battery, since its alumina regenerates the bath.) The residue is hard, porous, and cracked, and contains sulphur from the sulphuric acid of the alum, a little iron, phosphoric acid in small quantity, a perceptible proportion of lime, and finally potash, which is always present in alums made from clay. The chlorine gas used was conducted by lead pipes and passed over calcium chloride before being used. The retort used was of about 300 litres capacity, and was placed vertically in a sort of chimney, *C* (Fig. 6), the flame circulating all around it. In the bottom was a square opening, *x*, about 20 centimetres square, which could be closed by a tile kept in place by a screw, *V*. A porcelain tube pierced the sides of the furnace and en-

tered the retort at *O;* it was protected from the flame by a fire-clay cylinder inclosing it. At the top, the retort was closed by a tile, *Z*, of refractory brick, in the centre of which was made a square opening, *W*, of 10 to 12 centimetres side. Finally, an opening, *X*, plaeed 30 centimetres below the plate *Z*, gave issue to the vapors distilled, conducting them into the chamber *L*. This condensation chamber was about 1 metre cube; it had

FIG. 6.

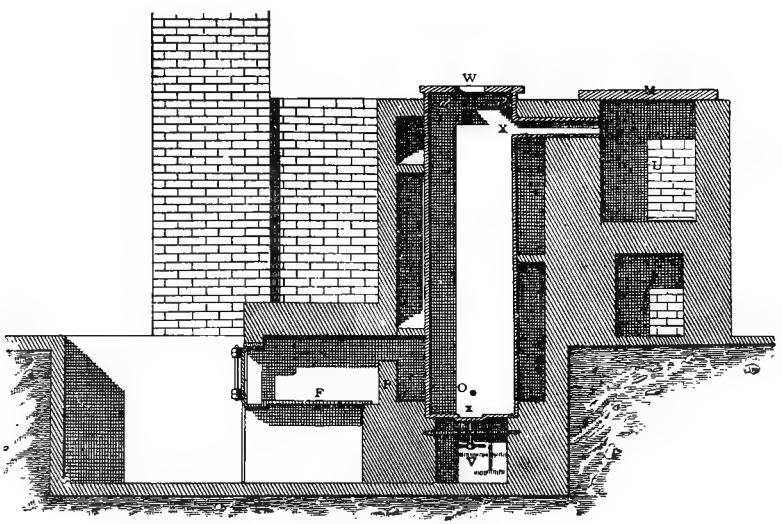

one wall of bricks in common with the furnace, thus keeping it rather hot. The other walls should be thin and set with close joints and very little mortar. The cover, *M*, was movable; it and the sides of the chamber were of glazed tiles. An opening 20–30 centimetres square in the lower part of the chamber communicated with flues lined with lead, for a little chloride was drawn into them. The uncondensed gas passed to a chimney.

"To work such an apparatus it is necessary, first of all, to dry it with the greatest care in all its parts, especially the condensation chamber. The retort is slowly heated and is left

open at *Z* until it is judged quite dry, and is then filled with red-hot, freshly-calcined mixture of carbon and alumina. The top cover is then replaced, and the fire urged until the retort is at a dark-red heat all over. Finally, chlorine is passed in, but the opening at *W* is kept open; the gas is allowed to pass into the condensation chamber only when fumes of aluminium chloride appear very abundantly at *W*. When the operation proceeds right, almost all the aluminium chloride is found attached in a dense, solid mass to the cover *M*. I have taken out at one time a plate weighing almost 50 kilogrammes, which was less than 10 centimetres thick; it was made up of a large number of sulphur-yellow crystals penetrating each other and looking like stalactites and long soda crystals. When it is judged that the material in the retort is almost exhausted, the hole *x* is opened, the residue scraped out, and fresh mixture put in. During the operation there should be no white vapors coming from the condensation chamber, but the odor of gas will always be sharp because of the silicon chloride present, formed unavoidably by the chlorine attacking the retort. A gas retort, handled well, should last continuously two or three months, or even more. The furnace should be constructed so as to permit its easy replacement without much expense. When in use, the retort is closely watched through spy-holes in the wall, and any cracks which may appear promptly plastered up, if not large, with a mixture of fine asbestos and soda glass."

Purification of aluminium chloride.—"It often happens that the chloride obtained is not pure, either from the nature of the apparatus employed, or from neglect of the many precautions which should be taken. In this case, to purify it, it is heated in an earthen or cast-iron vessel with fine iron turnings. When the hydrochloric acid, hydrogen and permanent gases are driven from the apparatus, it is closed and heated hotter, which produces a light pressure under which influence the aluminium chloride melts and enters into direct contact with the iron. The ferric chloride, which is as volatile as aluminium chloride,

is transformed into ferrous chloride, which is much less volatile, and the aluminium chloride can be obtained pure by being volatilized away or distilled in an atmosphere of hydrogen."

When the processes just described were put in use at the chemical works at La Glaciére, great care had to be taken to avoid letting vapors and acid gases escape into the air, since the works were surrounded by dwellings. To avoid these inconveniences, the vapor of aluminium chloride was made to enter a heated space in which was sodium chloride, in order to produce the less volatile double chloride; but the apparatus choked up so persistently that the attempt was given up. It then occurred to Deville to put sodium chloride into the mixture itself in the retort. The same apparatus was used as before, except that the large gas-retort had to be replaced by a smaller earthen one, which could be heated much hotter, the grate being carried half way up the retort.* The condensation chamber had to be replaced by a small earthen vessel. The double chloride produced is fusible at about 200°, and is quite colorless when pure, but colored yellow by iron. It is, moreover, very little altered in dry air when in compact masses, and can be easily handled. When the double chloride is obtained quite pure, it gives up its aluminium completely when reduced by sodium.

The following description by M. Margottet† will show the form of apparatus used in 1882 by the French company carrying on the Deville process at Salindres:—

The double chloride may be obtained in the same manner as the simple chloride; it is sufficient to put some common salt, NaCl, into a mixture of alumina and carbon, and on heating this mixture strongly there is formed, by the action of the chlorine, aluminium-sodium chloride, which distils at a red heat and condenses in a crystalline mass at about 200°. The hy-

* It was when first using this process that Deville borrowed some zinc retorts from the Vielle Montagne works, and since they contained a little zinc in their composition the aluminium made for a while was quite zinciferous.

† Fremy's Ency. Chimique.

drated alumina obtained in the preceding operation is mixed with salt and finely pulverized charcoal, in proper proportions, the whole is sifted, and a mixture produced as homogeneous as possible; then it is agglomerated with water and made into balls the size of the fist. These balls are first dried in a drying stove, at about 150°, then calcined at redness in retorts, where the double chloride should commence to be produced just as the balls are completely dried. These retorts are vertical cylinders of refractory earth; each one is furnished with a tube in its lower part for the introduction of chlorine, and with another towards its upper end for the exit of the vapor of double chloride (see Fig. 7). A lid carefully luted during the operation

FIG. 7.

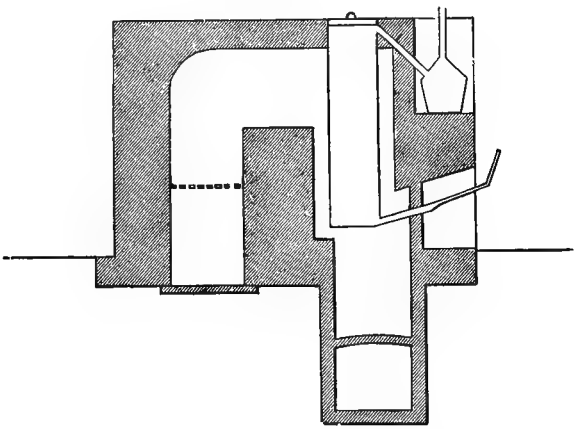

with a mixture of fine clay and horse-dung serves for the charging and discharging of the retort. The double chloride is condensed in earthen pots like flower-pots, made of ordinary clay, and closed by a well-luted cover, into which passes a pipe of clay to conduct the gas resulting from the operation into flues connected with the main chimney. Each retort is heated by a fire, the flame of which circulates all round it, and permits keeping it at a bright red heat. An operation is conducted as follows: The retort is filled with stove-dried balls, the lid is

carefully luted, and the retort is heated gently till all the moisture is driven off. This complete desiccation is of great importance, and requires much time. Then chlorine, furnished by a battery of three generating vessels, is passed in. During the first hours, the gas is totally absorbed by the balls; the double chloride distils regularly for about three hours, and runs into the earthen pots, where it solidifies. Toward the end, the distillation is more difficult and less regular, and the chlorine is then only incompletely absorbed. After each operation there remains a little residue in the retort, which accumulates and is removed every two days, when two operations are made per day. One operation lasts at least twelve hours, and a retort lasts sometimes a month. The double chloride is kept in the pots in which it was condensed until the time it is to be used in the next operation; it is almost chemically pure, save traces of iron, and is easy to keep and handle.

The following estimate was made by Wurtz, in 1872, showing the cost of a kilo of aluminium-sodium chloride as made by the above process:—

Anhydrous alumina	0.59	kilos	@	86	fr. per	100 kilos	= 0 fr.	50.7	cent.
Manganese dioxide	3.74	"	"	14	" "	" "	= 0 "	52.3	"
Hydrochloric acid	15.72	"	"	3	" "	" "	= 0 "	47.1	"
Coal	25.78	"	"	1.40	" "	" "	= 0 "	36.1	"
				Wages.....			0 "	23.8	"
				Expenses			0 "	38.0	"
				Total			2 fr.	48.0	cent.

This is equal to about 22½ cents per pound. An average of 10 kilos of this was used to produce one kilo of aluminium, which shows a yield of only 70 per cent. of the contained aluminium, and an increased cost of 67 cents on every pound of aluminium from the imperfection of reduction. In this respect there certainly seems large room for improvement.

The largest plant ever erected for the manufacture of aluminium-sodium chloride was that of the Aluminium Co. Ltd., at Oldbury, near Birmingham, England. The plant was commenced in the latter part of 1887, and was in working order in

July, 1888. The process is in principle indentical with that used at Salindres, but the whole was on such a large scale that the description is still interesting.

Twelve large regenerative gas furnaces are used, in each of which are placed five horizontal fire-clay retorts about 10 feet in length, into which the mixture is placed. These furnaces are in two rows, of six each, along each side of a building about 250 feet long, leaving a clear passage down the centre 50 feet wide. Above this central passage is a platform swung from the roof, which carries the large lead mains to supply chlorine to the retorts; opposite each retort is a branch pipe controlled by a valve. The valves are designed so that the chlorine must pass through a certain depth of (non-aqueous) liquid, thus regulating the flow and preventing any back pressure in the retort from forcing vapor into the main. The opposite or back ends of the retorts are fitted with pipes which convey the vapor of the double chloride into cast-iron condensers and thence into brick chests or boxes, the outsides or ends of which are closed by wooden doors fitting tightly. Convenient openings are arranged for clearing out the passages, which may become choked because of the quickness with which the double chloride condenses. On looking down the centre of the building it presents the appearance of a double bank of gas retorts for making ordinary illuminating gas, except that the retorts are only one-high. (Fig. 8).

The chlorine plant is on a correspondingly large scale, the usual manganese-dioxide method being employed and the spent liquor regenerated by Weldon's process. The chlorine gas is stored in large gasometers from which it is supplied to the retorts at a certain pressure. The mixture for treatment is made by mixing hydrated alumina with common salt and carbon in the form of charcoal powder or lamp-black. This being well mixed is moistened with water, thrown into a pug-mill from which it is forced out as solid cylinders, and cut into about 3 inch lengths by a workman. The lumps are then piled on top of the large chloride furnaces to dry. In a few hours they are

hard enough to allow handling, and are put into large wagons and wheeled to the front of the retorts.

When the retorts are at the proper temperature for charging, the balls are thrown in until the retort is quite full, the fronts are then put up and luted tightly with clay, and the charge left alone for about four hours, during which the water of the hydrated alumina is completely expelled, the rear end of the retort being disconnected from the condensing chamber, which

FIG. 8.

must be kept perfectly dry, and connected directly with the chimney. At the end of this time the chlorine is turned on and the retort connected with the receiver. At first the chlorine passed in is all absorbed by the charge and only carbonic oxide escapes into the boxes, where it is ignited and burns, thus warming them up. After a certain time dense fumes are evolved, and then the condensers are shut tightly and the uncondensed gases pass into the chimney. The chlorine is passed in for 72 hours in varying quantity, the boxes at the rear being opened from time to time by the workmen to note the progress of the distillation. The greater part of the double chlo-

ride liquefies and trickles down to the floor of the chambers, but a portion sublimes and condenses on the walls as a yellow crystalline powder. These chambers are emptied from time to time and the contents packed away in air-tight wooden chests, that it may keep without absorbing moisture from the air. At the end of the distillation the chlorine valves are closed and the condenser boxes cleaned out; the retorts are also opened at their front end and the residue raked out. This residue consists of a small quantity of alumina, charcoal and salt, and is remixed in certain proportions with fresh material and used over again. The retorts are then immediately re-charged and the operations repeated. Each set of five retorts produces about 1600 to 1800 lbs. in one operation, or say 3500 lbs. per week. The twelve furnaces are therefore capable of producing easily 1,500,000 lbs. of double chloride per annum. Since 10 lbs. of this salt are required to produce 1 lb. of aluminium, the capacity of the works is thus seen to be 150,000 lbs. or over of metal per year.

This last remark as to the proportion of chloride required to form the metal will show the absolute necessity there is to keep iron from contaminating the salt. This gets in, in varying proportions, from the iron in the materials used and in the fire-clay composing the retort, and exists as ferrous and ferric chlorides. Exercising the utmost care as to the purity of the alumina and charcoal used, and after having the retorts made of a special fire-clay containing a very small percentage of iron, it was found impossible to produce a chloride on a large scale containing less than 0.3 per cent. of iron. This crude chloride is highly deliquescent and varies in color from light yellow to dark red—the color depending not so much on the absolute amount of iron present as on the proportion of iron present as ferric salt, which has a high color. Since practically all the iron present in the salt passes into the aluminium, it is seen that the latter would contain 3 per cent. or more of iron. For some time the only way to obviate this difficulty was to resort to purifying the aluminium, by which the content of iron was finally reduced to

2 per cent. Mr. Castner has since perfected a process for purifying the double chloride by which only 0.01 per cent. of iron is left in it. The principle employed in doing this is described in the patent claims* to be the reduction of the iron salts to metallic iron by melting the chloride (single or double) with a quantity of metallic aluminium or sodium sufficient for this purpose. The purified chloride is quite white and far less deliquescent than the crude salt, which seems to indicate that the iron chlorides have a large share in rendering the crude salt so deliquescent. The purified chloride is preserved by melting and running into tight iron drums. A process of purification used later by Mr. Castner† consisted in separating out the iron electrolytically. The melted salt was passed slowly along a trough on the sides of which were electrodes kept at a tension sufficient to decompose the iron chlorides, the tension also being gradually decreased from one end to the other proportionally to the decreasing quantity of iron in the material as it passed along.

The success of the manufacture of the double chloride is said to depend on the proportions of the mixture, the temperature of the furnace, the quantity of chlorine introduced, and the details of construction of the retorts; but very little information on these points has been made public. The following figures may give some idea of the quantities of materials used: The production of 1000 lbs. of double chloride is said to require—

Common salt	357 lbs.
Hydrated alumina	491 "
Chlorine gas	674 "
Coal	1800 "

The salt and hydrated alumina are therefore mixed in about the same proportion as those indicated by the formula which represents the reaction

* U. S. Patent, No. 409,668, Aug. 27, 1889.

† U. S. Patent, No. 422,500, March 4, 1890.

$$Al_2O_3+2NaCl+3C+6Cl=Al_2Cl_6.2NaCl+3CO.$$

for if we assume the hydrated alumina used to contain 90 per cent. of that compound, the 491 lbs. of it used would correspond to very nearly the amount of salt said to be used. As to the cost of this double chloride, so many uncertain elements enter into it that it cannot be satisfactorily estimated from the data at hand. We are informed, however,* that the double chloride used represented 43 per cent. of the cost of aluminium to this company. If we place the total cost at 8 shillings per lb. this would indicate a trifle over 4 pence per lb. as the cost of the double chloride. It was probably not over 3 pence.

H. A. Gadsden,† of London, patented a method of obtaining aluminium, in which the aluminium chloride used is obtained by a method similar in all respects to the process as described by Deville, except that the corundum or bauxite used is mixed with about 10 per cent. of sodium or potassium fluoride and a small quantity of fluorspar. After this has been mixed and calcined it is pulverized, 10 per cent. of charcoal dust added, made into balls and heated in a muffle until pasty. Taken out of the muffle they are then put into a retort, heated highly, and chlorine gas passed over them, when aluminium chloride distils.

Count R. de Montgelas‡ patents a process for producing aluminium chloride and the double chloride with sodium, in which the only difference from the preceding methods is that molasses is used instead of pitch for moulding the mixture into balls, the mixture otherwise containing alumina, charcoal, and sodium chloride; and it is claimed that by regulating the heat at which chlorine is passed over this mixture, previously calcined, aluminium chloride can be volatilized while aluminium-sodium chloride remains in the retort. The use of horizontal retorts is recommended.

* Zeitschrift des Verein Deutscher Ingenieure, 1889, p. 301.

† German Patent (D. R. P.) No. 27,572 (1884).

‡ English Patents Nos. 10,011, 10,012, 10,013, Aug. 4, 1886.

Prof. Chas. F. Mabery,* of the Case School of Applied Science, Cleveland, patented and assigned to the Cowles Bros. the process of making aluminium chloride, consisting in passing dry chlorine or hydrochloric acid gas over an alloy of aluminium and some other metal kept in a closed vessel at a temperature sufficient to volatilize the aluminium chloride formed, which is caught in a condenser. Or, hydrochloric acid gas is passed through an electrically heated furnace, in which alumina is being decomposed by carbon, a condenser being attached to the opposite end of the furnace.

Mr. Paul Curie† states that aluminium chloride can be made by passing vapors of carbon disulphide and hydrochloric acid either simultaneously or successively over ignited alumina or clay. The first forms aluminium sulphide, which the latter converts into the volatile chloride, which distils.

H. W. Warren‡ recommends the following process as of general application in producing anhydrous metallic chlorides. Petroleum is saturated with either chlorine or hydrochloric acid gas, both gases being soluble in it to a large extent, particularly the latter gas. This operation is performed at a low temperature, as more of the gases is then dissolved. The oxide of the metal, alumina, for instance, is put into large earthenware retorts, and raised to red heat. The saturated oil is then boiled and its vapor passed into the retort. On contact with the oxide a strong reaction commences, fumes of aluminium chloride are at once evolved, and distil into a condenser, the operation being continued until no more white fumes appear. Then fresh alumina is supplied, and the reaction continues. The aluminium chloride may be purified from any oil by gentle application of heat. Mr. Warren also used naphthaline chloride with advantage, as also chloride of carbon, but their high price rendered them unable to compare with petroleum in economy.

* U. S. Patent, Oct. 26, 1886.

† Chemical News, 1873, p. 307.

‡ Chemical News, April 29, 1887.

Aluminium bromide can be similarly prepared by substituting bromine for chlorine.

Camille A. Faure, of New York, the well-known inventor of the Faure storage battery, has patented* a process for producing aluminium chloride, which is very similar to the above method. The manipulation is described as follows: An oxygenated ore of aluminium is brought to about a red heat by bringing it, in a furnace, into direct contact with the flame. When at proper heat the flame is cut off and a gas containing carbon and chlorine introduced. A mixture of petroleum vapor or a similar hydrocarbon with hydrochloric acid gas is preferred. Vaporized chloride of aluminium immediately passes off into a condenser.

In a paper written by Mr. Faure, and read before the French Academy of Sciences by M. Berthelot,† it was stated that the aim of this process was to suppress the prominent disadvantages of the older methods: viz., cost and wear and tear of retorts, great consumption of fuel, slowness of the operation, large amount of labor, and cost of the chlorine. For this purpose the chlorine is replaced by hydrochloric acid gas and the carbon by a hydrocarbon. Since all pure hydrocarbons are decomposed at a red heat with deposition of carbon, the process would appear impracticable; but a proper mixture of hydrochloric acid gas and naphthaline vapor is said not to decompose by the highest temperature alone, a new compound being formed, a sort of napthaline chloride, which is exceedingly corrosive and powerful enough to attack any oxide and convert it into chloride. To carry out the process a gas furnace with large bed is used. On this is spread a layer of small pieces of bauxite about two feet deep. The flame comes in over the ore, passes downward through it and through numerous holes arranged in the hearth, and thence to a chimney. In this way the heat of the gases is well utilized, while the layer

* U. S. Patent, No. 385,345, July 3, 1888.

† July 30, 1888.

of bauxite is heated to whiteness on top and to low-red at the bottom. The flames are then turned off and the mixture of naphthaline and hydrochloric acid vapors passed upward through the bed, and by their reaction producing aluminium chloride, which is diverted by suitable flues into a condenser. It is claimed that by careful fractional condensation the chlorides of silicon, iron, calcium, etc., formed from impurities in the bauxite, can be easily separated, that of silicon being more volatile and those of iron and calcium less volatile than aluminium chloride. As naphthaline is a bye-product from gas-works, it is claimed that it can be bought for 1½ cents per lb., and that only ¼ of a lb. is used per lb. of aluminium chloride produced. It is also claimed that one furnace, with two men to work it, will produce 4000 lbs. of chloride a day. The estimated cost of the chloride is about 1½ cents per pound, of which 17 per cent. is for beauxite, 47 per cent. for hydrochloric acid, 27 per cent. for naphthaline, and 9 per cent. for labor. Mr. Faure experimented in the vicinity of New York during 1889, and was sanguine of having the process at work in 1890, but no commercial process has resulted from these efforts. (See further, Chap. XI.)

In all the processes for producing aluminium chloride so far considered, the use of common clay was not recommended, since silicon chloride is formed as well as aluminium chloride. The only method proposed for using clay for this purpose is that of M. Dullo, nearly twenty years ago, and which cannot have been very successful, since it has not been heard of in operation. We will repeat his remarks, however, for there is still a large field open in the utilization of clay for the manufacture of aluminium, and since the metal is becoming so cheap the manufacturers are not above looking for and utilizing the cheapest raw material available.

*"Aluminium chloride may be obtained easily by direct treatment of clay. For this purpose a good clay, free from iron and sand, is mixed with enough water to make a thick pulp,

* Bull. de la Soc. Chem., 1860, vol. v., p. 472.

to which are added sodium chloride and pulverized carbon. For every 100 parts of dry clay there are taken 120 parts of salt and 30 of carbon. The mixture is dried and broken up into small fragments, which are then introduced into a red-hot retort traversed by a current of chlorine. Carbonic oxide is disengaged, while at the same time aluminium chloride and a little silicon chloride are formed. It is not necessary that the chlorine should be absolutely dry, it may be employed just as it comes from the generator. The gas is absorbed very rapidly, because between the aluminium and silicon there are reciprocal actions under the influence of which the chemical actions are more prompt and energetic. The aluminium having for chlorine a greater affinity than silicon has, aluminium chloride is first formed, and it is only when all the aluminium is thus transformed that any silicon chloride is formed. When the latter begins to form the operation is stopped, the incandescent mixture is taken out of the retort and treated with water. The solution is evaporated to dryness to separate out a small quantity of silica which is in it, the residue is taken up with water, and aluminium-sodium double chloride remains when the filtered solution is evaporated to dryness."

We must say of M. Dullo's suggestions that it is the general experience that the more volatile silicon chloride is formed first; it is also very improbable that a solution of aluminium-sodium chloride can be evaporated without decomposition.

III.

The Preparation of Aluminium Fluoride and Aluminium-Sodium Fluoride (Cryolite).

Natural cryolite is too impure for use in many operations which aim to produce very pure aluminium. Schuh has proposed boiling the mineral in solution of soda. Under certain conditions sodium aluminate is formed (see p. 151), but if the solution of soda is dilute the liquor remains clear after taking up the cryolite, and on passing a current of carbonic acid gas

through it aluminium-sodium fluoride is precipitated. In this way the pure double fluoride can be separated from impure cryolite.

Berzelius recommended preparing artificial cryolite by decomposing aluminium hydrate by a solution of sodium fluoride and hydrofluoric acid, the hydrate being added to the liquid until its acidity was just neutralized:—

$$Al_2O_3.3H_2O + 6NaF + 6HF = 2(AlF_3.3NaF) + 6H_2O.$$

Deville states that on adding sodium chloride to a solution obtained by dissolving alumina in an excess of hydrofluoric acid, a precipitate of cryolite is obtained. Since cryolite is hardly attacked at all by hydrochloric acid, it is probable that the reaction occurring is

$$AlF_3 + 3HF + 3NaCl = AlF_3.3NaF + 3HCl.$$

The process which Deville recommended as best, however, is the treatment of a mixture of calcined alumina and carbonate of soda, mixed in the proportions in which their bases exist in cryolite, by an excess of pure hydrofluoric acid:—

$$Al_2O_3 + 3Na_2CO_3 + 12HF = 2(AlF.3NaF) + 3CO_2 + 6H_2O.$$

100 parts of pure alumina requiring 310 parts of sodium carbonate and 245 of anhydrous hydrofluoric acid, there being 410 parts of cryolite formed. On drying the mass and melting it there results a limpid, homogeneous bath having all the characteristics of cryolite, being reduced by sodium or by an electric current, which would not result from a mere mixture of alumina and sodium fluoride melted together.

Deville also states that when anhydrous aluminium chloride is heated with sodium fluoride in excess, a molten bath results of great fluidity, and on cooling and dissolving away the excess of sodium fluoride by repeated washings the residue is similar to cryolite, while the solutions contain no trace of any soluble aluminium salt:—

$$AlCl_3 + 6NaF = AlF_3.3NaF + 3NaCl.$$

It is evident, however, that the above reaction would be the reverse of a profitable one, and is therefore not of economical utility.

Pieper* patents a very similar reaction, but operates in the wet way. A solution of aluminium chloride is decomposed by adding to it a suitable quantity of sodium fluoride in solution. Sodium chloride is formed and cryolite precipitated, as in the last reaction given. By adding different proportions of sodium fluoride solution, precipitates of double salts are obtained, containing varying proportions of the two fluorides. The use of aluminium chloride in solution would dispense with the objection made to Deville's analogous method, and this process would very probably produce cryolite quite cheaply.

Bruner† produced aluminium fluoride by passing hydrofluoric acid gas in the required quantity over alumina heated red hot in a platinum crucible:—

$$Al_2O_3 + 6HF = 2AlF_3 + 3H_2O.$$

Deville‡ states that it can be made by melting together the equivalent quantities of cryolite and aluminium sulphate:

$$2(AlF_3.3NaF) + Al_2(SO_4)_3.xH_2O = 4AlF_3 + 3Na_2SO_4 + xH_2O.$$

On washing the fusion, sodium sulphate goes into the solution. It is also stated that hydrochloric acid gas acting on a mixture of fluorspar and alumina at a high temperature will produce aluminium fluoride:

$$Al_2O_3 + 3CaF_2 + 6HCl = 2AlF_3 + 3CaCl_2 + 3H_2O.$$

The calcium chloride would be partly volatilized and the remainder washed out of the fusion.

Hautefeuille§ obtained crystallized aluminium fluoride by

* German Patent (D. R. P.), No. 35,212.

† Pogg. Annalen, 98, p. 488.

‡ Ann. de. Chim. et de Phys. [3], 61, p. 333; [3], 49, p. 79.

§ Idem, [4], 4, p. 153.

passing hydrofluoric acid gas and steam together over red-hot alumina.

Ludwig Grabau, of Hanover, bases his process of producing aluminium on the reduction of aluminium fluoride (see Chap. X.), which is prepared on a commercial scale by the following ingenious methods:

* The process is based on the conversion of aluminium sulphate into fluoride by reaction with cryolite, the fluoride being afterward reduced by sodium in such a manner that a double fluoride of sodium and aluminium results, which is used over again, thus forming a continuous process. The purest obtainable cryolite is used to start the process, after which no more is needed, the material supplying the aluminium being its sulphate, which can be obtained cheaply in large quantities, and almost perfectly pure. The process is outlined by the reactions—

$$2(AlF_3.3NaF) + Al_2(SO_4)_3 = 4AlF_3 + 3Na_2SO_4$$
$$2AlF_3 + 3Na = Al + AlF_3.3NaF.$$

It is thus seen that theoretically the cryolite would be exactly reproduced, but the losses and incomplete reactions unavoidable in practice would cause less to be obtained, and necessitate the continual addition of fresh cryolite; since, however, it is not desired to base the process on the continual use of cryolite, because of the impurities in that mineral, an indirect process is used, consisting of two reactions, in place of the first given above, in which theoretically a larger quantity of cryolite is finally obtained than is used to begin with. This is operated by introducing fluorspar into the process, the base of which goes out as calcium sulphate or gypsum, and so supplies the fluorine needed.

In practice, a solution of aluminium sulphate is heated with powdered fluorspar (obtained as pure as possible and further cleaned by treatment with dilute hydrochloric acid). The

* German Patent (D. R. P.), No. 48,535, March 8, 1889.

aluminium sulphate will not be entirely converted into fluoride, as has been previously observed by Friedel,* but about two-thirds of the sulphuric acid is replaced by fluorine, forming a fluorsulphate of aluminium. This latter compound remains in solution, while gypsum and undecomposed fluorspar remain as a residue and are filtered out.

$$Al_2(SO_4)_3 + 2CaF_2 = Al_2F_4(SO_4) + 2\,CaSO_4.$$

This solution is concentrated and mixed with cryolite in such proportion that the alkali in the latter is just equivalent to the sulphuric acid in the fluor-sulphate. The mass is dried and gnited, and the product washed and dried.

$$3Al_4F_4(SO_4) + 2(AlF_3.3NaF) = 8AlF_3 + 3Na_2SO_4.$$

On reduction with sodium, the 8 molecules of aluminium fluoride, treated with sodium as by the reaction given, produce 4 molecules of the double fluoride. It is thus seen that after allowing for reasonable losses in the process there is much more cryolite produced than is used, and the excess can be very profitably sold as pure cryolite, being absolutely free from iron or silica.

Grabau proposed to obtain his aluminium sulphate solution directly from kaolin, by treatment with sulphuric acid, and thus utilize this most abundant of the aluminous minerals. It is claimed that aluminium fluoride of the greatest purity can be thus manufactured at a less cost than pure alumina can be made.

More recently the method of production has been varied as follows:† To produce aluminium fluoride free from silicon and iron, calcined clay or kaolin is stirred in excess into dilute hydrofluoric acid, a 12 per cent. solution of which is recommended. The violent reaction ensuing is moderated by cooling, so that the temperature does not exceed 95°. After a few minutes the

* Bull. de la Soc. Chimique [2], xxi, 241.

† German Patent No. 69,791, August 20, 1892.

liquor is neutralized, as may be tested by a drop giving a pure yellow with tropäolin. This neutrality is essential to ensure the solution being free from silica. Further, this neutrality cannot be obtained using uncalcined clay, nor with clay which has been too highly heated. The clay must be calcined at a certain determined temperature, which can only be learned by experience. The hot, neutral solution is cooled to a moderate temperature and filtered quickly, washing the residue with hot water. On an average the equivalent of 95 per cent. of the hydrofluoric acid used can be obtained in the form of dissolved aluminium fluoride. The solution will be free from dissolved silica, but may contain iron, lead, arsenic or other accidental impurities. In order to separate out pure aluminium fluoride from this solution, Grabau has patented the following method of procedure:* The solution is first treated with sulphuretted hydrogen gas, which precipitates any lead, copper, arsenic, etc., which may be present, and reduces any ferric salt present to the ferrous state. Any other reducing agent could also be used to effect this. The solution is filtered and slightly acidified, so that a test drop turns red with tropäolin. A neutral solution holding hydrogen sulphide would in the subsequent cooling deposit traces of iron sulphide. The acidified solution is then strongly cooled in a receptacle, which may be of sheet aluminium. There at once separates out crystalline, hydrated aluminium fluoride, $AlF_3.9H_2O$. It is best to start the crystallization by dropping in a trace of the crystallized salt. As soon as the crystallization commences the temperature rises; when it again sinks to 0° by continuing the cooling, the crystallization is ended. The thick crystal liquor is separated on filters or in a centrifugal machine, into mother liquor and crystals; the latter are washed with ice-cold water. These crystals are free from iron, but if the solution had not been previously reduced, noticeable quantities of ferric fluoride would have been in them. These crystals are easily dried and the water driven off by gentle heating.

* German Patent No. 70,155, August 20, 1892.

IV.

The Preparation of Aluminium Sulphide.

Until the researches of M. Fremy, no other method of producing aluminium sulphide was known save by acting on the metal with sulphur at a very high heat. Fremy was the first to open up a different method, and it may be that his discoveries will yet be the basis of successful industrial processes. In order to understand just how much he discovered, we here give all that his original paper contains concerning this sulphide.*

"We know that sulphur has no action on silica or boric oxide, magnesia, or alumina. I thought that it might be possible to replace the oxygen by sulphur if I introduced or intervened a second affinity, as that of carbon for oxygen. These decompositions produced by two affinities are very frequent in chemistry; it is thus that carbon and chlorine, by acting simultaneously on silica or alumina, produce silicon or aluminium chloride, while either alone could not decompose it; a similar case is the decomposition of chromic oxide by carbon bisulphide, producing chromium sesquisulphide. Reflecting on these relations, I thought that carbon bisulphide ought to act at a high heat on silica, magnesia, and alumina, producing easily their sulphides. Experiment has confirmed this view. I have been able to obtain in this way almost all the sulphides which until then had been produced only by the action of sulphur on the metals.

"To facilitate the reaction and to protect the sulphide from the decomposing action of the alkalies contained in the porcelain tube which was used, I found it sometimes useful to mix the oxides with carbon and to form the mixture into bullets resembling those employed in the preparation of aluminium chloride. I ordinarily placed the bullets in little carbon boats, and heated the tube to whiteness in the current of vaporized

* Ann. de Chim. et de Phys. [3], 38, p. 312.

carbon bisulphide. The presence of divided carbon does not appear useful in the preparation of this sulphide.

"The aluminium sulphide formed is not volatile; it remains in the carbon boats and presents the appearance of a melted vitreous mass. On contact with water it is immediately decomposed:

$$Al_2S_3 + 3H_2O = Al_2O_3 + 3H_2S.$$

"The alumina is precipitated, no part of it going into solution. This precipitated alumina is immediately soluble in weak acids. The clear solution, evaporated to dryness, gives no trace of alumina. It is on this phenomenon that I base the method of analysis.

"Aluminium sulphide being non-volatile, it is always mixed with some undecomposed alumina. It is, in fact, impossible to entirely transform all the alumina into sulphide. I have heated less than a gramme of alumina to redness five or six hours in carbon bisulphide vapor, and the product was always a mixture of alumina and aluminium sulphide. The reason is that the sulphide, being non-volatile and fusible, coats over the alumina and prevents its further decomposition. The alumina thus mixed with the sulphide, and which has been exposed to a red heat for a long time, is very hard, scratches glass, and is in grains which are entirely insoluble in acids. By reason of this property I have been able to analyze the product exactly, for on treating the product with water and determining on the one hand the sulphuretted hydrogen evolved, and on the other the quantity of soluble alumina resulting, I have determined the two elements of the compound. One gramme of my product contained 0.365 grm. of aluminium sulphide, or 36.5 per cent., the remainder being undecomposed alumina."

The composition of this sulphide was—

Aluminium	0.137	grm.	= 37.5	per cent.
Sulphur	0.228	"	= 62.5	"
	0.365	"	100.0	"

The formula Al_2S_3 requires—

Aluminium	36.3 per cent.
Sulphur	63.7 "

The above is the substance of Fremy's investigations and results. Reichel* next published an account of further experiments in this line. He found that by melting alumina and sulphur together no reaction ensued. In the case of magnesia, the sulphide was formed if carbon was mixed with the magnesia and sulphur, but this change did not alter the alumina. Hydrogen gas passed over a mixture of alumina and sulphur likewise gave negative results. Sulphuretted hydrogen passed over ignited alumina did not succeed. By filling a tube with pure alumina, passing in hydrogen gas and the vapor of carbon bisulphide, the heating being continued until carbon bisulphide condensed in the outlet tube, and then hydrogen being passed through until the tube was cold, a product was obtained containing aluminium sulphide and undecomposed alumina.

In 1886, the writer made a series of experiments on the production and reduction of aluminium sulphide. Alumina, either alone or mixed with carbon or with carbon and sulphur, was put in porcelain or carbon boats into a hard glass or porcelain tube. This was then heated and vapor of carbon bisulphide passed through it. The product was analyzed according to Fremy's directions. The proportion of aluminium sulphide obtained in the product varied from 13 to 40 per cent. The best result was obtained at the highest heat—almost whiteness. The presence of sulphur or carbon, or both together, mixed with the alumina, did not promote to any degree the formation of a richer product. The conditions for obtaining the best results seem to be high heat and fine division of the alumina to facilitate its contact with the carbon bisulphide vapor. The product was light-yellow when not mixed with carbon, easily pulverized, and evolved sulphuretted hydrogen gas energetically

* Jahresb. der Chemie, 1867, p. 155.

when dropped into water. Since carbon bisulphide can now be manfactured at a very low price, say 2 to 3 cents per lb., it is not impossible that it may be found profitable to produce aluminium from its sulphide. In such a case, large retorts would be used, a stirring apparatus would facilitate the formation of a richer product, and the unused carbon bisulphide could be condensed and saved.

M. Comenge,* of Paris, proposed to prepare aluminium sulphide by using a clay retort similar to those used in gas-works, filling it one-half its length with charcoal or coke and the other half with alumina. The retort being heated to rednesss, sulphur is introduced at the coke end, when in contact with the carbon it forms carbon bisulphide, which acts upon the alumina at the other end, producing the sulphide.

Messrs. Reillon, Montague, and Bourgerel † obtained a patent in England for producing aluminium, in which aluminium sulphide is obtained by mixing powdered alumina with 40 per cent. of its weight of charcoal or lampblack and formed into a paste with a sufficient quantity of oil and tar. This is then calcined in a closed vessel and an aluminous coke obtained. This is broken into pieces, put into a retort, and treated with carbon bisulphide vapor. The inventors state that the reaction takes place according to the formula

$$2Al_2O_3 + 3C + 3CS_2 = 4Al_2S_3 + 6CO.$$

Petitjean‡ states that if alumina is mixed with tar or turpentine and ignited in a carbon-lined crucible, and the coke obtained mixed intimately with sulphur and carbonate of soda and ignited a long time at bright redness, there results a double sulphide of aluminium and sodium, from which aluminium can be easily extracted.

It has been stated § that if aluminium fluoride is heated with

* English Patent, 1858, No. 461.

† English Patent, No. 4,756, March 28, 1887.

‡ Polytechnisches Central. Blatt., 1858, p. 888.

§ Chemical News, 1860.

calcium sulphide, aluminium sulphide results. F. Lauterborn* also makes the same claim in a patent twenty years later, but the possibility of this reaction taking place is not yet beyond question.

* German Patent (D. R. P.), No. 14,495 (1880).

CHAPTER VII.

THE MANUFACTURE OF SODIUM.

SOME years ago, in order to treat fully of the metallurgy of aluminium it would have been as necessary to accompany it with all the details of the manufacture of sodium as to give the details of the reduction of the aluminium, because the manufacture of the former was carried on solely in connection with that of the latter. But now sodium has come out of the list of chemical curiosities, and has become an article of commerce, used for many other purposes than the reduction of aluminium. In fact, the last four years has seen the almost total extinction of the sodium processes of producing aluminium. If it be asked why such a chapter as this is still retained in a treatise on aluminium, the answer is that for thirty years aluminium was made solely by its use; sodium is bound up with the history of aluminium; and it is not impossible, though perhaps improbable, that some improved form of sodium process, in which metallic sodium is produced and at once utilized in the one operation, may yet find a footing in the aluminium industry. For these and other reasons which might be advanced, the methods of producing sodium are yet of considerable interest to the worker in aluminium, and are therefore retained, with the addition of a few recent processes.

Davy to Deville (1808–1855).

Sodium was first isolated by Davy by the use of electricity in the year 1808.* Later, Gay Lussac and Thenard made it by decomposing at a very high temperature a mixture of sodium carbonate and iron filings.† In 1808, also, Curaudau an-

* Phil. Trans., 1808.

† Recherches Physico-chimiques, 1810.

nounced that he had succeeded in producing potassium or sodium without using iron, simply by decomposing their carbonates by means of animal charcoal. Brünner, continuing this investigation, used instead of animal charcoal the so-called black flux, the product obtained by calcining crude tartar from wine barrels. He was the first to use the wrought-iron mercury bottles. The mixture was heated white hot in a furnace, the sodium volatilized, and was condensed in an iron tube screwed into the top of the flask, which projected from the furnace and was cooled with water. In Brünner's experiments he only obtained three per cent. of the weight of the mixture as metallic sodium, the rest of the metal being lost as vapor.

Donny and Mareska gave the condenser the form which with a few modifications it retains to-day. It was of iron, 4 millimetres thick, and was made in the shape of a book, having a length of about 100 centimetres, breadth 50, and depth 6 (see Fig. 9). This form is now so well known that a further description is unnecessary. With this condenser the greatest difficulty of the process was removed, and the operation could be carried on in safety. This apparatus was devised and used by Donny and Mareska in 1854, with the supervision of Deville.

FIG. 9.

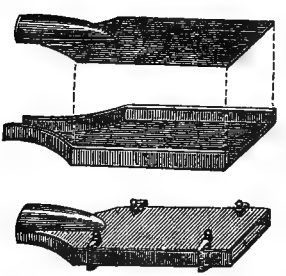

Deville's Improvements at Javel (1855).

The following is Deville's own description of the attempts which he made to reduce the cost of producing sodium. As far as we can learn these experiments were commenced in 1854, but the processes about to be given are those which were carried out at Javel, March to June, 1855. As the description contains so many allusions to the difficulties met not only in producing but also in handling and preserving sodium, its perusal is yet of value to all concerned in this subject, although the

actual methods here described have been superseded by much more economical ones.

Properties of sodium.—"The small equivalent of sodium and the low price of sodium carbonate should long since have caused it to be preferred to potassium in chemical operations, but a false idea prevailed for a long time concerning the difficulties accompanying the reduction. When I commenced these researches the cost of sodium was at least double that of potassium. In this connection I can quote from my memoir published in the Ann. de Chim. et de Phys., Jan., 1, 1855: "I have studied with care the preparation of sodium and its properties with respect to oxygen and the air, in order to solve the difficulties which accompany its reduction and the dangers of handling it. In this later respect, sodium is not to be compared to potassium. As an example of how dangerous the latter is, I will relate that being used to handle sodium and wishing once to replace it with potassium, the simple rubbing of the metal between two sheets of paper sufficed to ignite it with an explosion. Sodium may be beaten out between two sheets of paper, cut and handled in the air, without accident if the fingers and tools used are not wet. It may be heated with impunity in the air, even to its fusing point, without taking fire, and when melted, oxidation takes place slowly, and only at the expense of the moisture of the air. I have even concluded that the vapor alone of sodium is inflammable, but the vivid combustion of the metal can yet take place at a temperature which is far below its boiling point, but at which the tension of the metallic vapors has become sensible." I will add to these remarks that sodium possesses two considerable advantages: it is obtained pure at the first operation, and, thanks to a knack which I was a long time in finding out, the globules of the metal may be reunited and treated as an ordinary metal when melting and casting in the air. I have thus been able to dispense with the distillation of the raw products in the manufacture—an operation which had come to be believed necessary, and which occasioned a loss of 50 per cent. or so on the

return, without appreciable advantage to the purity of the metal. The manufacture of sodium is in no manner encumbered by the carburetted products, or perhaps nitrides, which are very explosive, and render the preparation of potassium so dangerous. I ought to say, however, that by making potassium on a large scale by the processes I am about to describe for sodium, Rousseau Bros. have diminished the dangers of its preparation very much, and practice the process daily in their chemical works.

Method employed. The method of manufacture is founded on the reaction of carbon on alkaline carbonate. This method has been very rarely applied to sodium, but is used every day for producing potassium. Brunner's process is, in fact, very difficult to apply, great trouble being met, especially in the shape of condenser used. It is Donny and Mareska who have mastered the principles which should guide in constructing these condensers.

Composition of mixtures used. The mixture which has given me excellent results in the laboratory is:

Sodium carbonate	717 parts.
Wood charcoal	175 "
Chalk	108 "
	1000

Dry carbonate of soda is used, the carbon and chalk pulverized, the whole made into a paste with oil and calcined in a crucible. The end of a mercury bottle, cut off, serves very well, and can be conveniently closed. Oil may be used altogether in place of charcoal, in which case the following proportions are used:

Sodium carbonate	625 parts.
Oil	280 "
Chalk	95 "

That a mixture be considered good, it should not melt at the temperature at which sodium is evolved, becoming liquid at

this point and so obstructing the disengagement of the gas.* But it should become pasty, so as to mold itself evenly against the lower side of the iron vessel in which it is heated. The considerable latent heat required by carbonic oxide and sodium in assuming the gaseous state, is one cause of cooling which retards the combustion of the iron. When soda salt is introduced in place of dried soda crystals, the mixture, whatever its composition, always melts, the gases making a sort of ebullition, the workmen saying that the apparatus "sputters." This behavior characterizes a bad mixture. It has been demonstrated to me that the economy made at the expense of a material such as carbonate of soda, the price of which varies with its strength in degrees, and which forms relatively a small portion of the cost of sodium, is annulled by a decrease of 20 to 25 per cent. in the return of sodium. The oil used ought to be dry and of long flame. It acts as a reducing agent, and also furnishes during the whole operation hydrogenous gases, and even, towards the close, pure hydrogen, which help to carry the sodium vapor rapidly away into the condenser, and to protect the condensed metal from the destructive action of the carbonic oxide. Oil renders a similar service in the manufacture of zinc. The rôle of the chalk is easy to understand. By its infusibility it decreases the liability of the mixture to melt. Further it gives off carbonic acid, immediately reduced by the carbon present to carbonic oxide. Now, the sodium ought to be carried rapidly away out of the apparatus, because it has the property of decomposing carbonic oxide, which is simultaneously formed, within certain limits of temperature, especially if the sodium is disseminated in little globules and so presents a large surface to the destructive action of the gas. It is necessary, then, that the metallic vapors should be rapidly conducted into the condenser and brought into the *liquid* state

* It seems plain, however, granting that vapors would be evolved most freely from a *perfectly* infusible charge, that a pasty condition, such as is recommended in the next sentence, would be the worst possible state of the charge for evolving gas, being manifestly inferior to a completely fluid bath.—J. W. R.

—not into that state comparable to "flowers of sulphur," in which the metal is very oxidizable because of its fine division. A rapid current of gas, even of carbonic oxide, actively carries the vapors into the condenser, which they keep warm and so facilitate the reunion of the globules of sodium. At La Glaciere and Nanterre a mixture was used in which the proportion of chalk, far from being diminished, was, on the contrary, increased. The proportions used were—

Sodium carbonate	40 kilos	= 597	parts.
Oil	18 "	= 269	"
Chalk	9 "	= 134	"
	67	1000	

This quantity of mixture ought to give 9.4 kilos of sodium, melted and cast into ingots, without counting the metal divided and mixed with foreign materials, of which a good deal is formed. This return would be one-seventh of the weight of the mixture, or one-quarter of the sodium carbonate used.

Use of these mixtures. The carbonate of soda, charcoal, and chalk ought to be pulverized and sieved, well mixed and again sieved, in order to make a very intimate mixture; the mixture ought to be used as soon as possible after preparing, that it may not take up moisture. The mixture may be put just as it is into the apparatus where it should furnish sodium, but it may very advantageously be previously calcined so as to reduce its volume considerably, and so permit a greater weight being put into the same vessel. I believe that whenever this calcination may be made with economy, as with the waste heat of a furnace, a gain is made by doing so, but the procedure is not indispensable. However, the utility of it may be judged when it is stated that a mercury bottle held two kilos of non-calcined mixture, but 3.6 kilos were put into one when previously calcined. These two bottles heated in the same fire for the same time gave quantities of sodium very nearly proportional to the weight of soda in them. In working under the direction of a good workman, who made the bottles serve for almost four

operations, I have been able to obtain very fine sodium at as low a price as 9.25 francs per kilo ($0.84 per pound). In the manufacture of sodium by the continuous process, where the materials may be introduced red hot into the apparatus, this preliminary calcination is a very economical operation.

Apparatus for reducing, condensing, and heating.—M. Brünner had the happy idea of employing mercury bottles in manufacturing potassium; thus the apparatus for reduction was in the hands of any chemist, and at such a low price that any one has been able to make potassium without much trouble. These bottles are equally suitable for preparing sodium, and the quantity which may be obtained from such apparatus and the ease with which they are heated, are such that they might have been used a long time for the industrial manufacture, except for two reasons which tend to increase the price of these bottles continually. For some time a large number of bottles have been sent to the gold workers of Australia and California, also large quantities have been used in late years in preparing the alkaline metals; these two facts have diminished the number to such a point that from 0.5 or 1 franc the price has been raised to 2.5 or 3 francs. It has thus become necessary to replace them, which has been done by substituting large wrought-iron tubes which have the added advantage of being able to be worked continuously. I will first describe the manufacture in mercury bottles, which may still be very advantageously used in the laboratory, and afterwards the continuous production in large iron cylinders as now worked industrially.

Manufacture in mercury bottles.—The apparatus needed is composed of a furnace, a mercury bottle, and a condenser.

The form of furnace most suitable is a square shaft, *C* (Fig. 10), the sides of which are refractory brick, while the grate *G* ought to have movable grate bars, the furnace being connected above with a chimney furnishing good draft. The flue *F*, connecting with the chimney, should have a damper, *R*, closing tightly, and should lead exactly from the centre of the top of the shaft, thus dividing the draft equally all over the grate.

Coke is charged through lateral openings at *O*. A small opening closed by a brick should be left a short distance above the grate bars, in order to poke down the coke around the bottle should it not fall freely. The space between the grate and bottle should always be full of fuel in order to keep the iron of the bottle from being burnt. In front of the furnace is a square opening, *P*, closed with an iron plate, which has a hole in it by which the tube *T* issues from the furnace.

The mercury bottle is supported on two refractory bricks, *KK*, cut on their top side to the curve of the bottle. These

FIG. 10.

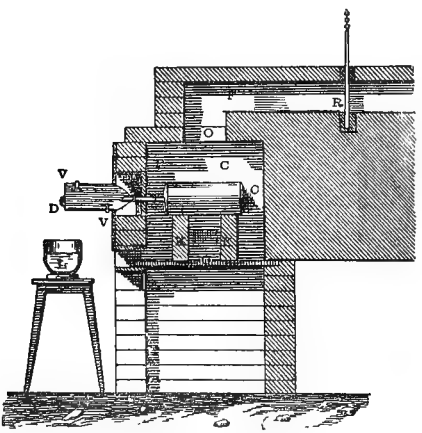

should be at least 20 centimetres high to maintain between the grate and the bottle a convenient distance. The illustration gives the vertical dimensions correctly, but the horizontal dimensions are somewhat shortened. There should be at least 12 centimetres between the bottle and sides of the furnace. However, all these dimensions should vary with the strength of the chimney draft and the kind of fuel used; the furnace should be narrower if the draft is very strong and the coke dense. The iron tube *T*, which may conveniently be made of a gun barrel, is either screwed into the bottle or it may be simply fitted and forced into place, provided it hold tightly

enough. It should be about 5 to 6 centimetres long, and should project scarcely 1 centimetre from the furnace. The end projecting should be tapered off in order to fit closely into the neck of the condenser.

The condenser is constructed with very little deviation from that given by Donny and Mareska (see Fig. 9, p. 180). I have tried my best to make this apparatus as perfect as possible, but have always reverted to the form described by those authors; yet even the very small differences I have made are indispensable and must be rigidly adhered to if it is wished to get the best results obtainable. Two plates of sheet iron, 2 to 3 millimetres thick, are taken and cut into the shape indicated by Fig. 11. One plate, *A*, remains flat except at the point *C*, where it is drawn by hammering into a semi-cylindrical neck of about 25 millimetres inside diameter. This

FIG. 11.

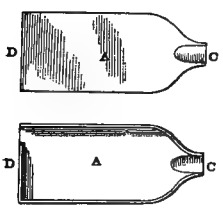

FIG. 13.

FIG. 14.

FIG. 12.

FIG. 15.

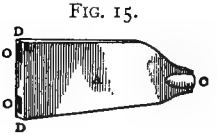

corresponds with a similar neck in the other plate, so that on joining the two there is a short cylinder formed. The edges of the plate *A* are raised all around the sides about 5 to 6 millimetres, so that when the two plates are put together the longitudinal section from *D* to *C* is as in Fig. 12. As to the end, in one form the edge was not turned up, leaving the end open as in Fig. 13. Another form, which I use when wishing to let the sodium accumulate in the condenser till it is quite full, is made by turning up the edge at the end all but a small space left free, thus giving the end the appearance of Fig. 14, this device also being shown in Fig. 11. The gas evolved during

the reaction then escapes at the hole *O*. The most rational arrangement of the apparatus is that shown in Fig. 15. In this condenser the lower part, instead of being horizontal, is inclined, and the end having two openings, *O* and *O'*, the sodium trickles out at the lower one as it condenses, while the gas escapes by the slightly larger upper opening. In placing the plates together, the raised edges are washed with lime so as to form a good joint with the flat plate, and the plates are kept together by strong pressure grips.

To conduct the operation, the bottles are filled entirely with mixture, the tube *T* adjusted, and then placed on the two supports, there being already a good bed of fire on the grate. The front is put up, the shaft filled with coke, and the damper opened. The gases disengaged from the bottle are abundant, of a yellow color; at the end of half an hour white fumes of carbonate of soda appear. The condenser should not yet be attached, but it should be noted if any sodium condenses on a cold iron rod pushed into the tube, which would be indicated by its fuming in the air. As soon as this test shows that sodium is being produced, the condenser is attached and the fire kept quite hot. The condenser soon becomes warm from the gases passing through it, while the sodium condenses and flows out at the end *D* (Fig. 15). It is received in a cast-iron basin *L*, in which some non-volatile petroleum is put. When at the end of a certain time the condenser becomes choked, it is replaced by another which has been previously warmed up to 200° or 300° by placing it on top of the furnace. If the closed condenser is used, care must be taken to watch when it becomes full, on the point of running from the upper opening, and the condenser then replaced and plunged into a cast-iron pot full of petroleum at a temperature of 150°. The sodium here melts at the bottom of this pot and is ladled out at the end of the day. The oil is generally kept up to 150° by the hot condensers being plunged in constantly. The pot ought to have a close cover, to close it in case the oil takes fire; the extinction of the fire can thus be assured and no danger results. If

the oil fires just as a condenser is being introduced, the sodium is run out in the air without igniting, the only drawback being that the condenser must be cleaned before using again. This method occasions a large loss of oil, however, and has been completely abandoned for the other form of condensers. When the operation proceeds well only pure sodium is obtained, the carbonized products which accompany in so provoking a manner the preparation of potassium not occurring in quantity sufficient to cause any trouble. Before using a condenser a second time it is put on a grating over a basin of petroleum and rubbed with a chisel-pointed tool in order to remove any such carbonized products. From time to time this material is collected, put into a mercury bottle, and heated gently. The oil first distils, and is condensed in another cold bottle. The fire is then urged, a condenser attached, and the operation proceeds as with a fresh charge, much sodium being thus recovered.

The raw sodium is obtained from the bottles in quantities of over half a kilo; it is perfectly pure, dissolving in absolute alcohol without residue. It is melted and moulded into ingots just as lead or zinc. The operation I have deseribed is executed daily, and only once has the sodium ignited. To prevent such accidents it is simply necessary to keep water away from the apparatus. The reduction of carbonate of soda and the production of sodium are such easy operations that when tried by those conversant with the manufacture of potassium or who have read about the difficulties of the production of sodium, success is only gained after several attempts—the failure being due solely to excess of precautions. The reduction should be carried on rapidly, so that a bottle charged with two kilos of mixture may be heated and emptied in, at most, two hours. It is unnecessary to prolong the operation after the yellow flame stops issuing from the condenser, for no more sodium is obtained and the bottle may frequently be destroyed. The temperature necessary for the reduction is not so high as it has been so far imagined. M. Rivot, who has assisted in these ex-

periments, thinks that the bottles are not heated higher than the retorts in the middle of the zinc furnaces at Vielle Montagne. I have been even induced to try cast-iron bottles, but they did not resist the first heating, without doubt because they were not protected from the fire by any luting or covering. But I was immediately successful in using cast-iron bottles decarburized by the process used for making malleable castings. The mercury bottles heated without an envelope ought to serve three or four operations when entrusted to a careful workman. Besides all these precautions, success in this work depends particularly on the ability and experience of the workman, who can at any time double the cost of the sodium by carelessness in managing the fire.

Continuous manufacture in cylinders. It might be thought that by increasing proportionately in all their parts the dimensions of the apparatus just described, it would be easy to produce much larger quantities of sodium. This idea, which naturally presented itself to me at once, has been the cause of many unfruitful attempts, into the details of which I will not enter. I must, however, explain some details which may appear insignificant at first sight, but which were necessitated during the development of the process. For instance, it will perhaps look irrational for me to keep the same sized outlet tubes and condensers that were used with the mercury bottles, for tubes five times as large; but I was forced to adopt this arrangement after trying the use of tubes and condensers of all sizes; indeed, it is fortunate for the success of the operation that this was so, for it became very injurious to the workmen to handle the large and weighty apparatus in the face of a large sodium flame.

The mixture of sodium carbonate and carbon is made in the manner already described. I would say again that a previous strong calcination of the materials presents a great advantage, not only because it permits putting a much larger weight into the retorts at once, but also that, being more compact, the mixture will not rise as powder and be violently thrown out of the

strongly-heated retorts. The mixture should also be calcined as needed, and used to fill the tubes while still red hot. When cold, uncalcined mixture is used, it is put into large cartridges of thick paper or canvas, 8 centimetres diameter and 35 centimetres long.

The furnace and tubes are shown in section in Fig. 16. The tubes *T* are 120 centimetres long, 14 centimetres inside diameter, and 10 to 12 millimetres in thickness. They are formed from one piece of boiler iron, bent and welded along

FIG. 16.

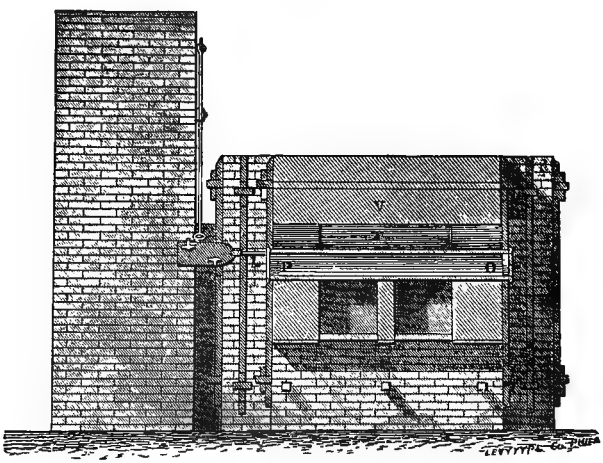

one side. The iron plate *P* which closes one end is about 2 centimetres thick, and pierced on one of its edges quite close to the side of the cylinder by a hole in which is screwed or fitted an iron tube, *L*, 5 to 6 centimetres long and 15 to 20 millimetres inside diameter, and tapering off at the end to fit into the condenser neck. The other end of the tube is closed by an iron plug, *O*, terminated by a knob. The welded side of the tube is kept uppermost. These iron tubes should not, like the mercury bottles, be heated in the bare fire; it is necessary to coat them with a resistant luting which is itself enveloped by a refractory jacket 1 centimetre thick, 22 centimetres interior

diameter, and the same length as the retorts. This protection is commenced by plastering the retorts over with a mixture of equal parts of raw clay and stove ashes, which have been made into a paste with water and as much sand worked into the mixture as it will take without losing its plasticity, also adding some horse manure. This luting should be dried slowly, and the tube thus prepared is introduced into the refractory jacket, the open space between the two being filled with powdered refractory brick. Finally, luting is put on the iron plate *P*, so that no part of it is exposed to the flame.

The furnace I have used is a reverberatory, but I do not recommend its use without important modifications, because it does not realize all the conditions of easy and economic heating. The grate is divided into two parts by a little wall of refractory brick, on which the middle of the reduction cylinders rests. The tubes are thus seen to be immediately over the bed of fuel. The top of the bridge is a little higher than the upper edge of the cylinders, this and the very low arch making the flame circulate better all around the tubes. A third cylinder might easily be placed above these two, and be heated satisfactorily, without any more fuel being burnt. This reverberatory receives on its bed the mixtures to be calcined, placed in cast-iron or earthen pots according to their composition. When the furnace is kept going night and day producing sodium, the temperature rises on the bed to clear cherry-red, and experience has shown that other reducing cylinders might be placed there, under such conditions, and be heated sufficiently for the reduction.

All that I have said of the manufacture of sodium in mercury bottles applies equally to its manufacture in cylinders. The only difference consists in the charging and discharging, and I have only to add several precautions to be taken. On introducing the cartridges containing uncalcined mixture, only 8 to 9 kilos can be heated at once; double as much can be used of previously-calcined mixture. The plug *O* is put in place, not so tightly that it cannot easily be taken out again; a little

luting stops all leakages which show themselves. The reduction lasts about four hours. When it is finished, a little water is thrown on the plug *O*, and it is easily loosened and removed. On looking into the cylinder, the cartridges are seen to have kept their shape, but have shrunken so much that their diameter is only about 2 to 3 centimetres; they are very spongy. This shows that the mixture has not melted; the remainder is principally lime and carbon, and free from sodium carbonate. While opening the cylinder, a bright-red-hot iron is thrust into the outlet tube *L*, to keep dirt from getting into it, and it is kept in until the charging is finished. The cartridges are put in by means of semi-cylindrical shovels. The sudden heating of the mixture disengages soda dust from uncalcined mixtures, which is very disagreeable to the workmen. The cylinders are closed, and when the sodium flame appears at the outlet tube the condenser is attached, and the operation proceeds as already described.

The envelopes of the cylinders are thick enough to prevent the distillation of the sodium being in any way affected by the accidental causes of cooling the fire. So when fresh fuel is charged or the door of the reverberatory is opened, causing the draft to cease almost entirely in the fire-place, the operation should not suffer by these intermittences, provided that they are not too long prolonged. In short, when operating in cylinders, the production of sodium is easier, less injurious to the workmen, and less costly in regard to labor and fuel than when working with mercury bottles. At times, after working a fortnight with many interruptions dangerous for the apparatus, my experiment has been suddenly ended. The furnace was intact; the envelopes of the tubes were split open, and the luting on the tubes found to be compact and coherent, but without traces of fusion, showing perfect resistance. The iron tubes meanwhile had not suffered inside or out, and seemed as though they would last indefinitely. I attribute this success to the particular care given to the composition of the jackets, and to the perfection with which the tubes had been welded. Only on

one of the tubes was a very slight crack found, on a part not the most highly heated, and not sufficient to cause the tube to be discarded.

Tissier Bros.' method of procedure. (1856). As related in the historical treatment of the subject (p. 13), Deville charged the Tissier Bros. with appropriating from him the process for the continuous production of sodium in cylinders, which, as just given, was devised during the experiments at Javel. On the other hand, the Tissier Bros. asserted their right to the process, patenting it, and using it in the works started at Rouen in the latter part of 1855. The following details are taken from Tissier's "Recherche de l'Aluminium," only such being selected as supplement Deville's description, which has just been given.

The sodium carbonate is first well dried at a high temperature, then mixed with well-dried pulverized charcoal and chalk, ground to the finest powder, the success of the operation depending on the fineness of this mixture. The proportions of these to use are various. One simple mixture is of

Sodium carbonate	566
Coal	244
Chalk	95
Coke	95
	1000

Another contains—

Sodium carbonate	615
Coal	277
Chalk	108
	1000

The addition of chalk has the object of making the mixture less fusible and more porous, but has the disadvantage that the residue remaining in the retort after the operation is very impure, and it is impossible to add any of it to the succeeding charge; and also, some of it being reduced to caustic lime forms caustic alkali with some sodium carbonate, which is then

lost. When the mixture is well made it is subjected to a preliminary calcination. This is done in cast-iron cylinders, two of which are placed side by side in a furnace and heated to redness (see Fig. 17). This is continued till all the moisture, carbonic acid, and any carburetted hydrogen from the coal, cease coming off, The mass contracts, becomes white and somewhat dense, so that a larger amount of the mixture can now be treated in the retorts where the sodium is evolved. As soon as the outcoming gases burn with a yellow flame, showing

FIG. 17.

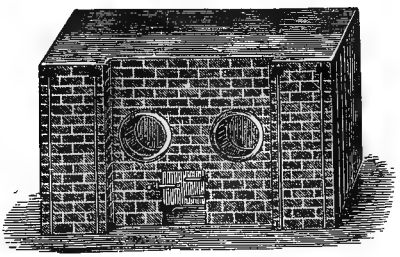

sodium coming off, the calcination is stopped. The mixture is then immediately drawn out on to the stone floor of the shop, where it cools quickly and is then ready for the next operation. This calcination yields a mixture which without any previous reactions is just ready to evolve sodium when brought to the necessary temperature. This material is made into a sort of cylinder or cartridge and put into the decomposition retorts (see Fig. 16). The charging should be done quickly. The final retorts are of wrought-iron, since cast-iron would not stand the heat. At each end this retort is closed with wrought-iron stoppers and made tight with fire-clay. Through one stopper leads the pipe to the condenser, the other stopper is the one removed when the retort is to be recharged. These retorts are placed horizontally in rows in a furnace. Usually four are placed in a furnace, preferably heated by gas, such as the Siemens regenerative furnace or Bicheroux, these being

much more economical. In spite of all these precautions the retorts will be strongly attacked, and in order to protect them from the destructive action of a white heat for seven or eight hours they are coated with some kind of fire-proof material. The best for this purpose is graphite, which is made into cylinders enclosing the retorts, and which can remain in place till the furnace is worn out. These graphite cylinders not only protect the iron retorts, but prevent the diffusion of the gaseous products of the reaction into the hearth, and so support the retorts that their removal from the furnace is easily accomplished. Instead of these graphite cylinders the retorts may be painted with a mixture that melts at white heat and so enamels the outside. A mixture of alumina, sand, yellow earth, borax, and water-glass will serve very well in many cases. We would remark that the waste gases from this furnace can be used for the calcining of the mixture, or even for the reduction of the aluminium by sodium, where the manufacture of the former is connected with the making of the sodium.

As for the reduction of the sodium, the retort is first heated to redness, during which the stopper at the condenser end of the retort is left off. The charge is then rapidly put in, and the stopper at once put in place. The reaction begins almost at once and the operation is soon under full headway, the gases evolved burning from the upper slit of the condenser tube with a flame a foot long. The gases increase in volume as the operation continues, the flame becoming yellower from sodium and so intensely bright as to be insupportable to look at. Now has come the moment when the workman must quickly adapt the condenser to the end of the tube projecting from the retort, the joint being greased with tallow or paraffin. The sodium collects in this in a melted state and trickles out. The length of the operation varies, depending on the intensity of the heat and the quantity of the mixture; a charge may sometimes be driven over in two hours, and sometimes it takes eight. We can say, in general, that if the reaction goes on quickly a somewhat larger amount of sodium is obtained. The higher the

heat used, however, the quicker the retorts are destroyed. The operation requires continual attention. From time to time, a workman with a prod opens up the neck of the condenser, but if care is not taken the metal overflows; if this happens, the metal overflowing is thrown into some petroleum, while another man replaces the condenser with an empty one. The operation is ended when the evolution of gas ceases and the flame becomes short and feeble, while the connecting tube between the retort and condenser keeps clean and does not stop up. As soon as this occurs, the stopper at the charging end is removed, the charge raked out into an iron car, and a new charge being put in, the operation continues. After several operations the retorts must be well cleaned and scraped out. The sodium thus obtained is in melted bits or drops, mixed with carbon and sodium carbonate. It must, therefore, be cleaned, which is done by melting it in a wrought-iron kettle under paraffin with a gentle heat, and then casting it into the desired shapes. The sodium is kept under a layer of oil or any hydrocarbon of high boiling point containing no oxygen.

Tissier gives the reaction as—

$$Na_2CO_3 + 2C = 3CO + 2Na.$$

The sodium is condensed, while the carbonic oxide, carrying over some sodium, burns at the end of the apparatus. This would all be very simple if the reaction of carbonic oxide on sodium near the condensing point did not complicate matters, producing a black, infusible deposit of sodium monoxide (Na_2O) and carbon, which on being melted always give rise to a loss of sodium.

Deville's Improvements at La Glacière (1857).

At this works Deville tried the continuous process of manufacturing sodium in cylinders on a still larger scale, with the following results, as described by Deville himself:—

"We made no change in the composition of the mixtures used

from those already described, or in the form or size of the iron tubes or the method of condensation; but we worked with six cylinders at a time in a furnace similar to the puddling furnaces of M. Guadillot, the tubes being protected by refractory envelopes. The cylinders were so arranged on the hearth that the flame bathed all parts of their surface. A low brick wall extends down the centre of the hearth, supporting the middle of the cylinders, which extend across it. The hearth is well rammed with refractory sand, and the space between it and the bottom of the cylinder serves as a passage-way for most of the flame.

"Our six cylinders worked satisfactorily for five days. We were able to observe that they were all heated with remarkable uniformity, and that the heat was sufficient all round them. It also appeared that the rear end of the cylinders required only a hermetic seal. Indeed, as soon as the operation was well under way and sodium distilling off, some of it condensed and oxidized in the cool parts of the apparatus, forming a sort of plug of carbonate and carbides of sodium, which the vapor and gases could no longer penetrate. We were thus able for a long time to distil sodium away from one of our tubes which was entirely opened at the rear.

"This new furnace worked so well that we were hopeful of complete success, when an accident happened which compelled the stopping of the experiment. The iron tubes had been ordered 1.20 metres long, the size of the hearth calculated accordingly, but they were delivered to us only 1.05 metres long. We made use of these, with the result that the rear ends became red-hot during the operation and allowed sodium vapors to leak through. These leaked through the luting, and escaping into the furnace, melted the envelopes very rapidly.

"In another attempt, in which this fault was avoided, we were unsuccessful because the envelopes gave way at the first heating up, both they and the iron tubes being of inferior quality. We were considerably inconvenienced by the failure of these experiments, which caused considerable expense and gave no very definite results. Just then a new sort of apparatus was

devised, a description of which is given later on. It will be seen that we were compelled to employ tubes of very small value, so that their destruction in case of accident involved no great loss, and to heat each one by an independent fire, so that the stoppage or destruction of one cylinder would not necessitate the stoppage or endanger the safety of the neighboring ones."

Cast-iron vessels. Deville tried at La Glacière, as well as at Javel, to utilize cast-iron vessels for producing sodium. Deville states the difficulties which caused their use to be unsuccessful to be as follows:

"The result was always unfavorable. Sodium is obtained, but as soon as its production becomes rapid the vessel melts and the operation is quickly ended. This follows because the temperature necessary for the production of the metal is far from being sufficient for producing it in large quantities at once; and we know that this is the one condition for condensing the sodium well and obtaining it economically. This observation led me to think that by diminishing very much the temperature of the furnace, large apparatus of cast-iron with large working surface could be used, thus making at a time a large amount of metallic vapor which could be condensed in recipients of ordinary size. The whole large apparatus would thus have the output of a smaller one worked at a higher temperature. My experience has shown me that in large-sized tubes heated to a low temperature there is formed in a given time about as much sodium as from a single mercury bottle at a much higher heat. This is the reason why larger condensers are not necessary with the larger tubes. Before knowing this fact, I tried a large number of useless experiments to determine the size of condensers suitable for large apparatus. It is on this principle that I have long been endeavoring to make sodium without working at high temperatures, and using less costly and more easily protected apparatus."

Improvements used at Nanterre (1859).

The method used here was exactly that already described,

the improvements being solely in details of the apparatus. These are described by Deville as follows:—

"The experiments made at Javel and the continuous process used at Glacière have shown us in the clearest manner the absolute necessity of efficient protection for the iron cylinders, for without this protection the method cannot be practiced with economy. Further, experiments in this direction are very costly, for the failure of a tube stops the working of a large number of cylinders, and often compromises the brick-work of the furnace itself. We therefore came to the conclusion that for making the small quantity of sodium we required, 300 to 500 kilos a month, it would be better to employ smaller apparatus, independent of each other and easy to replace.

"The iron tubes are made of thinner iron and at very little expense, by taking a sheet of iron, curving it into a cylinder and riveting the seam. This tube resembles very closely those used at Javel, shown in Fig. 16, but of smaller dimensions. It is closed at each end by cast-iron plugs, one of which has a hole for the outlet tube. These cylinders are filled with sodium mixture and placed in furnaces of the form of Fig. 10, except it is necessary to have openings in the back and front of the furnace so that the cast-iron plugs closing the cylinders may be outside, to prevent their melting. We used coke at first for fuel, fed around the cylinders, but M. Morin has since placed the tubes out of direct contact with the fuel, uses soft coal, and heats the tubes by contact with the flame and by radiation. In the latest form used, two cylinders are placed in each furnace, and, in general, they serve for two or three operations. All that has been said in connection with the manufacture in mercury bottles is immediately applicable to the manufacture in cylinders of this kind, the capacity of which may vary from two to six or eight litres, without any change in the manner of using them. We have, however, adopted altogether condensers of cast-iron. The neck is cylindrical and belongs only to one-half of the apparatus, the neck end of the other plate being beveled and fitting closely against a recess in the other plate."

The foregoing shows the sodium industry as it was perfected by Deville, in 1859, and as it remained for twenty-five years without sensible change. The cost of sodium by this process is stated to have been, in 1872, as follows:—

Manufacture of one kilo of sodium.

Soda	9.35 kilos @ 32	fr. per 100 kilos =	3 fr. 9 cent.
Coal	74.32 " " 1.40	" " " " =	1 " 4 "
		Wages	3 " 73 "
		Expenses	3 " 46 "
		Total	11 fr. 32 cent.

which is equal to $1 per lb. The larger part of the expense account is the cost of retorts or tubes in which the operation takes place, and which are so quickly destroyed that the replacing of them forms nearly one-quarter of the cost of the metal.

Minor Improvements (1859–1888).

An experiment made by Deville in 1864* is of considerable interest in connection with some more recent processes. Guy Lussac and Thenard having observed that caustic potash is reduced by iron, Deville took a mercury bottle with an aperture above and one below, to which was fitted an iron tube and a sodium condenser. Finely divided iron, reduced by hydrogen, was put into the bottle, and when red hot, caustic soda was introduced through the upper aperture. The iron was strongly acted upon, and in less than 20 minutes Deville obtained ½ a kilo of pure sodium. The reduction was stopped by a mixture of soda and iron oxide filling up the lower opening. The arrangement and reactions suggest strongly some later processes. Why Deville did not continue on this line, I cannot say.

R. Wagner† uses paraffin in preference to paraffin oil in which to keep the sodium after making it. Only pure paraffin, which has been melted a long time on a water-bath, and all its water driven off, can be used. The sodium to be preserved is

* Leçons de Chemie, 1864–5, p. 336. † Dingler, 1883, p. 252.

dipped in the paraffin melted on a water-bath, and kept at no higher heat than 55° C., and the metal is thereby covered with a thick coat of paraffin which protects it from oxidation, and may then be put up in wooden or paper boxes. When the metal is to be used, it is easily freed from paraffin by simply warming it, since sodium melts at 95° to 96° C., and the paraffin at 50° to 60°.

The reduction of potassium carbonate by carbon requires a much less degree of heat than that of sodium carbonate, and therefore many attempts have been made to reduce potassium and sodium together, under circumstances where sodium alone would not be reduced. Dumas* added some potassium carbonate to the regular sodium mixture; and separated the sodium and potassium from each other by a slow, tedious oxidation. R. Wagner† made a similar attempt. He says that not only does the reduction of both metals from a mixture of their carbonates with carbon work easier than sodium carbonate alone with carbon, but even caustic soda may be used with potassium carbonate and carbon. Also, the melting point of potassium and sodium alloyed is much lower than that of either one alone, in consequence of which their boiling point and the temperature required for reduction are lower.

J. B. Thompson and W. White‡ specify mixing dry sodium carbonate with a liquid carbonaceous material, preferably tar, driving off all volatile matter in iron pots at a low heat, and then distilling in a tubular fire-clay retort connected with a tightly-closed receiver containing a little paraffin oil to ensure a non-oxiding atmosphere, and also provided with a small escape pipe for carbonic oxide. This process gave great prospects of success when tried in the laboratory, but on a manufacturing scale it failed for the reason (assigned by Mr. Thompson) that the sheet-iron tray, designed to keep the material from attacking the retort, absorbed carbon at about 1000° C. and fused, after which no sodium was produced, since the material took

* Handbuch der Angewandten Chemie, 1830, ii. 345.

† Dingler, 143, 343. ‡ English Patent 8426, June 11, 1887.

up silica from the retort, absorbing so much that the carbon no longer decomposed it.

H. S. Blackmore,* of Mount Vernon, U. S. A., patents the following process of obtaining sodium:—

Calcium hydrate	27½	parts.
Ferric oxide	31	"
Dry sodium carbonate	31	"
Charcoal	10½	"

are intimately mixed and subjected to a red heat for 20 minutes, afterwards to a white heat. Caustic soda is first produced, the carbon reduces the ferric oxide, producing iron, which in its turn reduces the caustic soda, and sodium vapors distil. The residue consists of ferric oxide and lime, and is slaked and used over.

O. M. Thowless† of Newark, N. J., claims to place a retort in a furnace, providing it on one side with an arm through which carboniferous material can be supplied, on the other side with a similar arm (surrounded by flues), into which caustic soda or sodium carbonate is charged—a valve controlling their flow into the retort. Outside the furnace and on top of it is a flat condenser into which the sodium vapor passes.

G. A. Jarvis‡ patents the replacement of the iron tubes or crucibles used in the manufacture of sodium, by fire-clay apparatus lined with basic material, such as strongly burnt magnesia with 10 per cent. of fluorspar.

Castner's Process (1886).

The first public announcement of this process was through one of the New York daily journals,§ and as the tone of the article is above that of the usual newspaper reports, and the expectations contained in it were subsequently more than realized, we cannot better introduce a description of this process than by quoting the paragraph referred to:—

* English Patent 15156, Oct. 22, 1888.

† English Patent 12486 (1887).

‡ English Patent 4842, March 31, 1888.

§ New York World, May 16, 1886.

"When sodium was reduced in cost to $1.50 per lb. it was thought to have touched a bottom figure, and all hope of making it any cheaper seemed fruitless. This cheapening was not brought about by any improved or new process of reduction, but was owing simply to the fact that the aluminium industry required sodium, and by making it in large quantities its cost does not exceed the above-mentioned price. The retail price is now $4.00 per lb. The process now used was invented by Brünner, in 1808, and up to the present time nothing new or original has been patented except three or four modifications of his process which have been adopted to meet the requirements of using it on a large scale. Mr. H. Y. Castner, whose laboratory is at 218 West Twentieth Street, New York, has the first patent ever granted on this subject in the United States, and the only one taken out in the world since 1808. Owing to negotiations being carried on, Mr. Castner having filed applications for patents in various foreign countries, but not having the patents granted there yet, we are not at liberty to state his process fully. The metal is reduced and distilled in large iron crucibles, which are raised automatically through apertures in the bottom of the furnace, where they remain until the reduction is completed and the sodium distilled. Then the crucible is lowered, a new one containing a fresh charge is substituted and raised into the furnace, while the one just used is cleaned and made ready for use again. The temperature required is very moderate, the sodium distillling as easy as zinc does when being reduced. Whereas by previous processes only one-third of the sodium in the charge is obtained, Mr. Castner gets nearly all, for the pots are nearly entirely empty when withdrawn from the furnace. Thus the great items of saving are two or three times as much metal extracted from a given amount of salt, and cheap cast iron crucibles used instead of expensive wrought-iron retorts. Mr. Castner expects to produce sodium at 25 cents per lb., thus solving the problem of cheap aluminium, and with it magnesium, silicon, and boron, all of which depend on sodium for their manufacture. Thus

the production of cheap sodium means much more than cheap aluminium. Mr. Castner is well known in New York as a chemist of good standing, and has associated with him Mr. J. H. Booth and Mr. Henry Booth, both well known as gentlemen of means and integrity."

The following are the claims which Mr. Castner makes in his patent:*

1. In a process for manufacturing potassium or sodium, performing the reduction by diffusing carbon in a body of alkali in a state of fusion at moderate temperatures.

2. Performing the reduction by means of the carbide of a metal or its equivalent.

3. Mechanically combining a metal and carbon to increase the weight of the reducing material, and then mixing this product with the alkali and fusing the latter, whereby the reducing material is held in suspension throughout the mass of fused alkali.

4. Performing the deoxidation by the carbide of a metal or its equivalent.

For an explanation of the principles made use of in the above outlined process we will quote from a lecture delivered by Mr. Castner at the Franklin Institute, Philadelphia, October 12th, 1886. That Institution has since bestowed on Mr. Castner one of its gold medals as a recognition of the benefit to science accruing from his invention.

"In the ordinary sodium process, lime is added to the reducing mixture to make the mass refractory, otherwise the alkali would fuse when the charge is highly heated, and separate from the light, infusible carbon. The carbon must be in the proportion to the sodium carbonate as four is to nine, as is found needful in practice, so as to assure each particle of soda in the refractory charge having an excess of carbon directly adjacent or in actual contact. Notwithstanding the well-known fact that sodium is reduced from its oxide at a degree of heat but slightly exceeding the reducing point of zinc oxide, the heat necessary

* U. S. Pat. No. 342,897, June 1, 1886. Hamilton Y. Castner, New York.

to accomplish reduction by this process and to obtain even one-third of the metal in the charge, closely approaches the melting point of wrought-iron.

"In my process, the reducing substance, owing to its composition and gravity, remains below the surface of the molten salt, and is, therefore, in direct contact with fused alkali. The metallic coke of iron and carbon contains about 30 per cent. carbon and 70 per cent. iron, equivalent to the formula FeC_2. I prefer to use caustic soda, on account of its fusibility, and mix with it such quantity of so-called 'carbide' that the carbon contained in the mixture shall not be in excess of the amount theoretically required by the following reaction:—

$$3NaOH + FeC_2 - 3Na + Fe + CO + CO_2 + 3H;$$

or, to every 100 lbs. of pure caustic soda, 75 lbs. of 'carbide,' containing about 22 lbs. of carbon.

"The necessary cover for the crucible is fixed stationary in each chamber, and from this cover a tube projects into the condenser outside the furnace. The edges of the cover are convex, those of the crucible concave, so that when the crucible is raised into position and held there, the tight joint thus made prevents all leaking of gas or vapor. Gas is used as fuel, and the reduction begins towards 1000° C. As the charge is fused, the alkali and reducing material are in direct contact, and this fact, together with the aid rendered the carbon by the fine iron, in withdrawing oxygen from the soda, explains why the reduction is accomplished at a moderate temperature. Furthermore, by reducing from a fused mass, in which the reducing agent remains in suspension, the operation can be carried on in crucibles of large diameter, the reduction taking place at the edges of the mass, where the heat is greatest, the charge flowing thereto from the centre to take the place of that reduced.

"I am enabled to obtain fully 90 per cent. of the metal in the charge, instead of 30 per cent. as formerly. The crucibles, after treatment, contain a little carbonate of soda, and all the iron of the 'carbide' still in a fine state of division, together

with a small percentage of carbon. These residues are treated with warm water, the solution evaporated to recover the carbonate of soda, while the fine iron is dried, and used over again for 'carbide.'"

Mr. Castner having demonstrated in his New York laboratory the success of his process, went to England, and for several months during the winter of 1886–7 was engaged in building and working a large sodium furnace. This was successfully carried out near London, the inventor being assisted by Mr. J. MacTear, F. C. S., who, in March, 1887, read a description of this furnace and the results obtained before the Society of Chemical Industry. During the working of this furnace it was inspected by many chemical and metallurgical authorities, who were completely satisfied as to its success. As the furnace then described differed in a few details from the one just referred to, it may be well to extract the essential particulars from Mr. MacTear's paper—on the ground that the importance of this invention justifies a complete discussion of its development:—

"Since Mr. Castner's paper upon his process, which was read before the Franklin Institute of Philadelphia, October 12, 1886, several slight changes in the mode of carrying on this process have been made. These have been brought about by the experience gained from the actual working of the process upon a commercially large scale.

"The reactions by which the sodium is produced are somewhat difficult to describe, as they vary somewhat according to the mixture of materials and temperature employed in the reduction. The mixture and temperature which it is now preferred to use is represented by the reaction:—

$$6NaHO + FeC_2 = 2Na_2CO_3 + 6H + Fe + 2Na.$$

"In place of using an actual chemical compound of iron and carbon, as expressed by the above reaction, a substitute or equivalent is prepared as follows: To a given quantity of melted pitch is added a definite proportion of iron in a fine state of

division. The mixture is cooled, broken up into lumps, and cooked in large crucibles, giving a metallic coke consisting of carbon and iron, the proportions of each depending upon the relative quantities of pitch and iron used. This metallic coke, after being finely ground, provides a substance having the iron and carbon in a like proportion to an iron carbide, and from which neither the iron nor carbon can be separated by mechanical means. The fine iron is conveniently prepared by passing carbonic oxide and hydrogen in a heated state, as obtained from an ordinary gas producer, over a mass of oxide of iron commercially known as 'purple ore,' heated to a temperature of about 500° C.

"In producing sodium, caustic soda of the highest obtainable strength is used, and there is mixed with it a weighed quantity of the so-called 'carbide,' sufficient to furnish the proper amount of carbon to carry out the reaction indicated above. The crucibles in which this mixture is treated are made of cast-steel, and are capable of containing a charge of 15 lbs. of caustic soda, together with the proper proportion of the 'carbide.'

"After charging a crucible with the above mixture, it is placed in a small furnace where it is kept at a low heat for about thirty minutes, during which time the mass fuses, boils violently, and a large part of the hydrogen is expelled by the combined action of the iron and carbon, the 'carbide,' owing to its gravity, remaining in suspension throughout the fused soda. At the end of the time stated, the contents of the crucible have subsided to a quiet fusion. The crucible is then lifted by a pair of tongs on wheels and placed upon the platform of the elevating gear, as shown in the drawing, (Fig. 18) and raised to its position in the heating chamber of the main distilling furnace. The cover which remains stationary in the furnace has a convex edge, while the crucible has a groove round the edge into which the edge of the cover fits. A little powdered lime is placed in the crucible groove just before it is raised, so that when the edges of the cover and crucible come together

they form a tight joint, and at the same time will allow the crucible to be lowered easily from the chamber when the operation is finished, to give place to another containing a fresh charge. From the cover projects a slanting tube (see Fig. 18), connected with the condenser. The condenser is provided with a small opening at the further end to allow the escape of hydrogen, and has also a rod fixed (as shown), by means of which any obstruction which may form in the tube during dis-

FIG. 18.

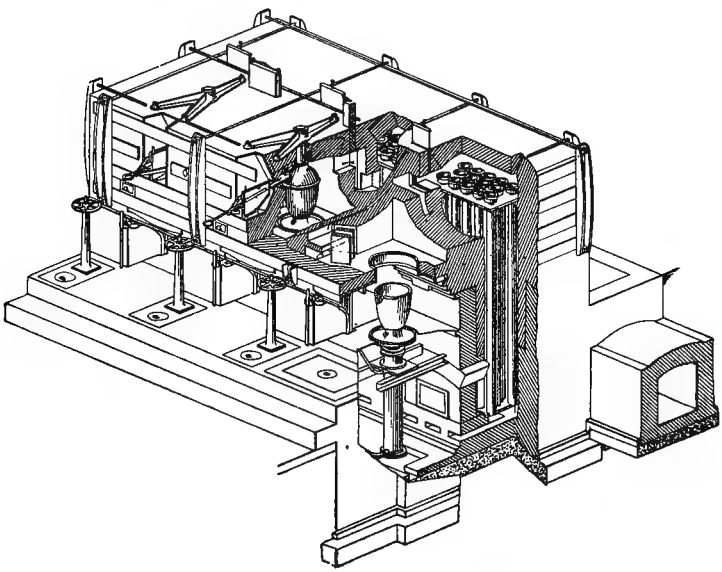

tillation may be removed. After raising a crucible in its place in the furnace, the hydrogen escaping from the condenser is lighted, and serves to show by the size of the flame how the operation is progressing in the crucible, the sodium actually distilling soon after the crucible is in its place. The temperature of the reduction and distillation has been found to be about 823° C. The gas coming off during the first part of the distillation has been analyzed and found to consist of pure hydrogen. Analysis of the gas disengaged when the ope-

ration was almost completed, gave as a result, hydrogen 95 per cent., carbonic oxide 5 per cent. It has been found advisable to use a little more 'carbide' than the reaction absolutely requires, and this accounts for the presence of the small quantity of carbonic oxide in the expelled gas, the free carbon acting upon the carbonate formed by the reaction, thus giving off carbonic oxide and leaving a very small percentage of the residue in the form of peroxide of sodium. This small amount of carbonic oxide rarely combines with any of the sodium in the tube, and so the metal obtained in the condensers is pure, and the tubes never become choked with the black compound. In the preparation of potassium a little less 'carbide' is used than the reaction requires; thus no carbonic oxide is given off, and all danger attached to the making of potassium is removed. After the reduction and distillation the crucible is lowered from the furnace and the contents poured out, leaving the crucible ready to be recharged. The average analyses of the residues show their composition to be as follows:—

Carbonate of soda	77	per cent.
Peroxide of sodium	2	"
Carbon	2	"
Iron	19	"

"The average weight of these residues from operating upon charges of 15 lbs. caustic soda and 5¼ lbs. of carbide is 16 lbs. These residues are treated either to produce pure crystallized carbonate of soda or caustic soda, and the iron is recovered and used again with pitch in the formation of the 'carbide.' From this residue weighing 16 lbs., is obtained 13 lbs. of anhydrous carbonate of soda, equivalent to 9.4 lbs. caustic soda of 76 per cent.

"Operating upon charges as above mentioned the yield has been—

Sodium, actual	2.50 lbs.	Theory	2.85 lbs.
Soda carbonate, actual	13.00 lbs.	"	13.25 lbs.

"The average time of distillation in the large furnace has

been 1 hour 30 minutes, and as the furnace is arranged for three crucibles, 45 lbs. of caustic soda are treated every 90 minutes, producing 7½ lbs. of sodium and 39 lbs. of carbonate of soda. The furnace is capable of treating 720 lbs. of caustic soda daily, giving a yield in 24 hours of 120 lbs. of sodium and 624 lbs. of anhydrous carbonate of soda. The furnace is heated by gas which is supplied by a Wilson Gas Producer, consuming 1 cwt. of fuel per hour. The small furnace in which the crucibles are first heated requires about ½ cwt. per hour. The following estimate of cost, etc., is given from the actual running of the furnace working with the above charges for 24 hours:—

	£	s.	d.
720 lbs. of caustic soda @ £11 per ton	3	10	10
150 lbs. of "carbide" @ ½*d.* per lb.	0	6	4
Labor	1	0	0
Fuel	0	17	0
Re-converting 624 lbs. of carbonate into caustic, at a cost of about £5 per ton on the caustic produced, say	1	0	0
Total	6	14	2
Deducting value of 475 lbs. of caustic recovered	2	6	8
Cost of 120 lbs. of sodium	£4	7	6

Cost per pound, 8¼*d.*

"Regarding the item of cost relating to the damage caused to the crucibles by the heat, this question has been very carefully gone into, some of the crucibles have been used upwards of fifty times, and from present indications of their condition there is no doubt that they can continue to be used at least 150 times more before they become unfit for further use. In considering 200 operations to be the life of a crucible, the item of damage or wear and tear amounts to less than 1*d.* per lb. on the sodium produced; and if we take the furnace tear and wear at the same rate of 1*d.* per lb., we will see that the tear and wear of plant is only one-twelfth of that incurred in the ordinary process. It is upon these facts that Mr. Castner bases his claim to be able to produce sodium by his process upon the large scale, at a cost of less than 1*s.* per lb. The advan-

tages of this process will be apparent to any one at all familiar with the manufacture of these metals as conducted heretofore. The first and most important end gained is their cheap production, and this is owing chiefly to the low heat at which the metals are produced, the quickness of the operation, non-clogging of the conveying tubes, and a very small waste of materials. The process furthermore admits of being carried on upon a very large scale; in fact, it is intended ultimately to increase the size of the crucible so as to make the charges consist of 50 lbs. of caustic soda. Crucibles of cast iron have been found quite suitable, and it is intended in future to use crucibles made of this material in place of the more expensive steel."

Immediately on the demonstration of this success, a company was formed to unite Mr. Castner's sodium process with Mr. Webster's improvements in the production of aluminium chloride. The Aluminium Co., Ltd., first appeared before the public in June, 1887, and at the first meeting in the following September it was decided to build works at once. These were begun at Oldbury, near Birmingham, and were in working operation by the end of July, 1888. The furnaces here erected were larger than the one just described, and altogether had a producing capacity of nearly a ton of sodium a day. The following details respecting this plant and its working are taken mostly from an address delivered before the Society of Arts, March 13, 1889, by Mr. William Anderson, and from a discourse at the Royal Institution, May 3, 1889, by Sir Henry Roscoe, president of the company.

There are four large sodium furnaces, each holding five pots or crucibles, and heated by gas, applied on the regenerative principle. A platform about five feet above the floor allows the workmen to attend to the condensers, while the lifts on which the pots are placed sink level with the floor. The crucibles used are egg-shaped, about 18 inches diameter at their widest part and 24 inches high; when joined to the cover the whole apparatus is about 3 feet in height. The covers

have vertical pipes passing through the top of the furnace, forming a passage for the introduction of part of the charge, and also a lateral pipe connecting with the condenser. The whole cover is fixed immovably to the roof of the furnace and is protected by brickwork from extreme heat; but it can easily be removed when necessary. The natural expansion of the vessels is accommodated by the water pressure in the hydraulic lifts on which the pots stand. When the lift is lowered and sinks with the lower part of the crucible to the floor level, a large pair of tongs mounted on wheels is run up, and catching

FIG. 19.

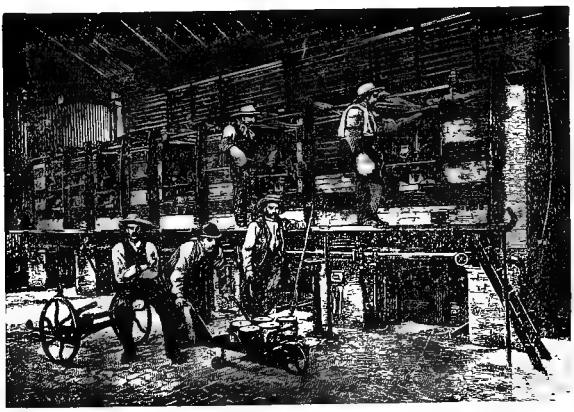

A CASTNER SODIUM FURNACE.

hold of the crucible by two projections on its sides, it is carried away by two men to the dumping pits, on the edge of which it is turned on its side, the liquid carbonate of soda and finely-divided iron which form the residue are turned out, and the inside is scraped clean from the opposite side of the pit, under the protection of iron shields. When clean inside and out, it is lifted again by the truck and carried back to the furnace, receiving a fresh charge on its way. It is then put on the platform and lifted into place, having still retained a good red heat. It takes only 1½ to 2 minutes to remove and empty a crucible,

and only 6 to 8 minutes to draw, empty, recharge, and replace the five crucibles in each furnace. The time occupied in reducing a charge is one hour and ten minutes. It is thus seen that one bank of crucibles yields 500 pounds of sodium in twenty-four hours, the battery of four furnaces producing about a ton in that time.

The shape of the condenser has been altogether changed. Instead of the flat form used on the furnace at London (see Fig. 18), which resembled the condenser used in the Deville process, a peculiar pattern is used which is quite different. It consists in a tube-shaped cast-iron vessel 5 inches in diameter, nearly 3 feet long over all, and having a slight bend upwards at a point about 20 inches from the end. At this bend is a small opening in the bottom, which can be kept closed by a rod dropping into it; this rod, passing through a tight-fitting hole above, can be raised or lowered from outside. Thus the sodium can either run out continually into small pots placed beneath the opening or can be allowed to collect in the condenser until several pounds are present, then a small potful run out at once, by simply lifting the iron rod. The outer end of the condenser is provided with a lid, hinged above, which can be thrown back out of the way when required. This lid also contains a small peep-hole covered with mica. In the top of the condenser just before the end is a small hole through which the hydrogen aud carbonic oxide gases escape when the end is closed, burning with the yellow sodium flame. The bend in the condenser is not acute enough to prevent a bar being thrust through the end right into the outlet tube projecting from the furnace, thus allowing the whole passage to be cleaned out should it become choked up. Previous to drawing the crucibles from the furnace for the purpose of emptying them and recharging, the small pots containing the metal distilled from one charge are removed and empty ones put in their place. Those removed each contain on an average about 6 lbs. of sodium, or 30 lbs. from the whole furnace. When sufficiently cool, petroleum is poured on top of the metal in the pots, and

they are wheeled on a truck to the sodium casting shop, where the sodium is melted in large pots heated by oil baths and cast either into large bars ready to be used for making aluminium or into smaller sticks to be sold. The sodium is preserved under an oil such as petroleum, which does not contain oxygen in its composition, and the greatest care is taken to protect it from water.

Special care is taken to keep the temperature of the furnace at about 1000° C., and the gas and air-valves are carefully regulated so as to maintain as even a temperature as possible. The covers remain in the furnace from Sunday night to Saturday afternoon, and the crucibles are kept in use till worn out, when new ones, previously heated red-hot, are substituted without interrupting the general running of the furnace. These bottom halves of the crucibles are the only part of the plant liable to exceptional wear and tear, and their durability is found to depend very much on the soundness of the casting, because any pores or defects are rapidly eaten into and the pot destroyed. The average duration of each crucible is now 750 lbs. of sodium, or 125 charges.

Apropos of the reaction involved in the reduction, it has probably been observed that Mr. MacTear proposes a different formula from that suggested by Mr. Castner. Mr. Weldon remarked that when a mixture of sodium carbonate and carbon was heated the carbon did not directly reduce the soda, but at a high temperature the mixture gives off vapors of oxide of sodium (Na_2O) part of which dissociates into free oxygen and sodium vapor; as soon as this dissociation takes place the carbon takes up the oxygen, forming carbonic oxide, and thus, by preventing the recombination of the sodium and oxygen, leaves free sodium vapors.

Dr. Kosman, speaking in "Stahl und Eisen," January, 1889, on Castner's process, gives the following explanation of the reactions taking place:—

Ten kilos of caustic soda and 5 kilos of carbide (containing 1.5 kilos of carbon) give the following reaction:

$$4NaOH + FeC_2 = Na_2CO_3 + Fe + 4H + CO + 2Na,$$

and half the sodium in the mixture is obtained.

Ten kilos of caustic soda and 10 kilos of carbide (containing 3 kilos of carbon) give this reaction—

$$2NaOH + FeC_2 = NaCO + Fe + 2H + CO + Na,$$

and half the sodium in the mixture is again obtained.

If 20 kilos of caustic soda and 15 kilos of carbide are mixed, both the above reactions take place; but if the ignition is continued, the sodium carboxyd (NaCO) reacts on the sodium carbonate according to the reaction—

$$Na_2CO_3 + NaCO = 3Na + 2CO_2,$$

and the entire reaction may be represented by

$$3NaOH + FeC_2 = 3Na + Fe + 3H + CO + CO_2,$$

and all the sodium in the mixture is obtained.

This is the reaction first proposed by Mr. Castner (see p. 206), and the proportions indicated by it gave him the largest return of sodium. Mr. MacTear, however, states that the reaction which takes place is conditioned largely by the temperature, and that at 1000° C. it is probably to be represented by

$$6NaOH + FeC_2 = 2Na_2CO_3 + 6H + Fe + 2Na,$$

which is essentially the same as that given by Sir Henry Roscoe in his discourse, viz:—

$$3NaOH + C = Na_2CO_3 + 3H + Na.$$

This reaction would require 18¾ lbs. of carbide to 50 lbs. of caustic soda, and since the sodium carbonate is easily converted back into caustic by treatment with lime, the production of so much carbonate is offset by the ease with which the reaction takes place, and the added advantage that the gas evolved with the sodium is solely hydrogen, thus allowing the reduction to

proceed in an atmosphere of that gas, and reducing the production of the usual deleterious sodium carbides to a minimum.

A further discussion of this subject will come up in considering Netto's process.

Netto's Process (1887).

Dr. Curt Netto, of Dresden, took out patents in several Eurupean countries,* which were transferred to and operated by the Alliance Aluminium Company, of London (see p. 31). The process is continuous, and is based on the partial reduction of caustic soda by carbon. Dr. Netto observes that carbon will reduce caustic soda at first at a red heat, but a white heat is necessary to finish the reduction, the explanation being that the reaction is at first—

$$4NaOH + C = Na_2CO_3 + 2H_2 + CO + Na_2,$$

and that the carbonate is only reduced at a white heat. To avoid any high temperature, the first reaction only is made use of, the carbonate being removed and fresh caustic supplied continuously, and without interrupting the operation or admitting air into the retort in which the reduction takes place.

A vertical cast-iron retort, protected by fire-clay coating, is surrounded by flues. The flame after heating the retort passes under an iron pot in which the caustic soda is kept melted, and situated just above the top of the retort. This pot has an outlet tube controlled by a stop-cock, by which the caustic may be discharged into a funnel with syphon-shaped stem fastened into the top of the retort. There is also a syphon-shaped outlet at the bottom of the retort, through which the molten sodium carbonate and bits of carbon pass. A hole with tight lid in the upper cover is provided for charging charcoal. A tube passes out just beneath the upper cover, connecting with a large condenser of the shape used by Deville (see Fig. 20). In operating, the retort is heated to bright redness, filled one-third with best wood charcoal, and then molten caustic soda

* German patent (D. R. P.) 45105; English patent, October 26, 1887, No. 14602.

tapped from the melting-pot into the funnel, the feed being so regulated that the funnel is kept full and the retort closed. The lower opening is kept closed until enough sodium carbonate has accumulated to lock the syphon passage air tight. When after several hours' working the charcoal is almost all used up, the supply of caustic soda is shut off for a time and

FIG. 20.

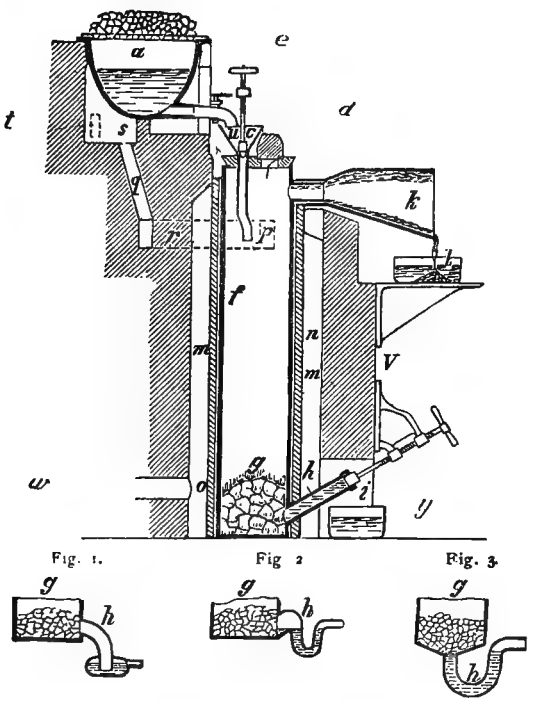

the retort recharged through the opening in the upper lid, when the operation goes on as before. The sodium carbonate produced is easily purified from carbon by solution. Since sodium vapor at a high temperature is very corrosive, all rivets and screw joints must be avoided in making the retort. On this account, the outlet tubes should be cast in one piece with the retort.

Both Netto's process and Castner's were in use for a considerable time (1888–1891), and produced sodium in large quantities and cheaply. With the advent of the cheaper electrolytic methods of producing aluminium, the sodium methods were put to a sharp struggle for existence. The Alliance Aluminium Company, working the Netto process, soon gave up the fight. The Aluminium Company, Limited, working Castner's process, were enabled to continue making aluminium for some time longer by an invention of Mr. Castner's to produce sodium electrolytically. This process is still being used, but the sodium produced is used for various other purposes than making aluminium, the extraordinary cheapness of the electrolytic processes rendering competition impossible.

Reduction of Sodium Compounds by Electricity.

The decomposition of fused sodium chloride by the electric current seems to promise the economic production of sodium, for not only is this metal formed, but chlorine is obtained as a by-product, its value reducing very much the cost of the operation.

P. Jablochoff has devised the following apparatus for decomposing sodium or potassium chlorides.* (Fig 21.)

The arrangement is easily understood. The salt to be decomposed is fed in by the funnel into the kettle heated by a fire beneath. The positive pole evolves chlorine gas, and the negative pole evolves vapor of the metal, for, as the salt is melted, the heat is sufficient to vaporize the metal liberated. The gas escapes through one tube and the metallic vapor by the other. The vapor is led into a condenser and solidified.

Prof. A. J. Rogers, of Milwaukee, Wis., has made a number of attempts to reduce sodium compounds electrolytically, using as a cathode a bath of molten lead and producing an alloy of lead and sodium which he makes use of for the reduction of aluminium compounds. Although these attempts are hardly

* Mierzinski.

past the experimental stage, yet the record of the results obtained may very probably be interesting and valuable to other investigators in this line.

Prof. Rogers reasons that from the known heat of combina-

FIG. 21.

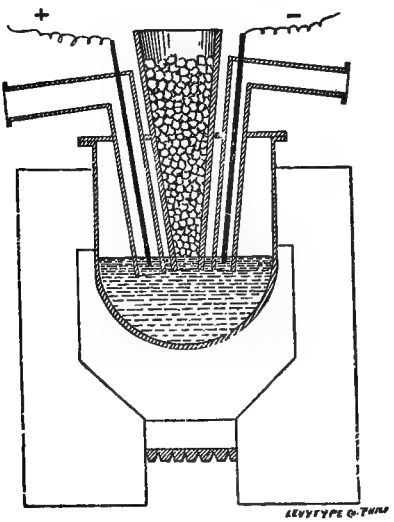

tion of sodium and chlorine (4247 calories per kilo of sodium) there is enough potential energy in a pound of coal to separate nearly two pounds of sodium, if any mode of applying the combustion of the coal to this end without loss could be devised. If, however, this energy is converted into mechanical work, this again into electrical energy, and this latter used to decompose sodium chloride, we can easily compute the amount of coal to be used in a steam boiler to produce a given amount of sodium by electrolysis. Now, if the electric current could be applied without loss in decomposing sodium chloride, 1 electric horse-power (746 Watts) would produce about 8 lbs. of sodium in 24 hours. But as in practice one mechanical horse-power applied to a dynamo yields only 80 or 90 per cent. of an electric horse-power, and as about 4 lbs. of coal are used per indicated

horse-power per hour, from 105 to 120 lbs. of coal would be required per day to produce this result, or about 15 lbs. per lb. of sodium. Since, however, there is a transfer resistance in the passage of the electric current through the molten electrolyte, more than this will be required, in proportion to the amount of current thus absorbed.

The temperature of fusion of sodium chloride is given by Carnelly as 776° C., but Prof. Rogers remarks that the fusing point may be lowered considerably by the presence of other salts; for instance, it melts about 200° lower if a small amount of calcium chloride or potassium chloride is present. We will quote the results of some experiments as given by Prof. Rogers.*

"The following results were obtained among many others by using a Grove battery, a Battersea crucible to hold the sodium chloride, a carbon anode and an iron cathode terminating in a tube of lime placed in the melted salt. As soon as metallic sodium escaped and burnt at the surface of the liquid the current was stopped. A little sodium was oxidized, but a considerable amount was found in the tube in the metallic state. In six experiments the amount of sodium obtained was from 50 to 85 per cent. of the theoretical amount, averaging 65 per cent. It thus seemed that, with suitable apparatus, from 5 to 6 lbs. of sodium could be obtained in 24 hours per electric horse-power. Thus, if there were no practical difficulties in the construction of the crucibles and other apparatus involved, nor in working continuously on a large scale, the metal could be obtained at small cost. Various forms of crucibles were used and attempts made to distil the metal when formed at the negative electrode (sodium volatilizing at about 900° C.), but the sodium vapor carries with it a large amount of sodium chloride as vapor, and the distillation is attended with difficulty.

"During the last three years I have experimented on the reduction of sodium chloride, using molten negative electrodes and especially lead. Lead, tin, zinc, cadmium and antimony

* Proceedings of the Wisconsin Natural History Society, April, 1889.

all readily alloy with sodium, a large part of which can be recovered from the alloys by distillation in an iron crucible. They can be heated to a higher temperature than pure sodium in acid crucibles without the sodium attacking the crucible. In the following experiments a dynamo machine was used to supply the current.

"Experiment 1. A current averaging 72 amperes and 33 volts was passed through molten sodium chloride contained in two crucibles arranged in series, for two hours. Each contained 30 lbs. of salt; in the first was put 104 grammes of tin, in the second 470 grammes of lead, each serving as cathode, and connection being made through the bottom of the crucible. A carbon anode passed through the cover and extended to within three inches of the molten cathode. The crucible containing the tin was nearer the fire and consequently hotter, and had an average potential across the electrodes of 12 volts, while that containing the lead cathode was 21 volts. When at the end of two hours the carbons were removed and the crucibles cooled and broken open, the lead alloy was found to contain 96 grammes of sodium, or 17 per cent. There was about 90 grammes of sodium found in the tin alloy, or between 45 and 50 per cent. Both these alloys rapidly oxidized in the air, and when thrown into water the action was very energetic, in the case of the tin alloy the liberated hydrogen being ignited, and after the reaction the metals were found at the bottom of the vessel in a finely divided state. Both these alloys reduce cryolite or aluminium chloride."

In Prof. Rogers' further experiments cryolite was added to the bath, so that sodium was produced and aluminium formed in one operation. (See under "Electrolytic Processes," Chap. XI.)

L. Grabau, of the "Aluminium Werke zu Trotha," has made the following observations on the electrolysis of molten sodium chloride. When the melted salt is subjected to the electric current, the resistance of the bath quickly rises and it becomes almost impossible to force the current through. This

is probably due to the formation of a non-conducting sub-chloride. The formation of this salt can be prevented by the addition of some potassium chloride and the chloride of an alkaline-earth metal to the bath. In his patents,* Grabau recommends the use of a mixture of sodium, potassium and strontium chlorides, in the proportion of 88 sodium chloride, 112 potassium chloride, and 159 strontium chloride. With this mixture, Grabau claims to obtain almost pure sodium, containing only about 3 per cent. of potassium and no trace of strontium, while at the same time 95 per cent. of the metal which the current should theoretically give is obtained. For all the purposes to which sodium is now applied the presence of the potassium is not in the least prejudicial. Borchers substantiates the fact that from a mixture of potassium and sodium chlorides, which is very fluid, only sodium is liberated by the current if it is not too strong and if the sodium chloride decomposed is at once replaced. For carrying on his process, Grabau uses the apparatus shown in Fig. 22. The positive poles are carbon rods (*C*), the negative an iron pipe *E*, slit in its lower part and surrounded by a bell-shaped porcelain cover *B*. As the molten sodium is lighter than the bath material, it rises into the pipe *E* and passes away through the branch *a* into a condenser where it collects under petroleum. The screw *H* can be turned downwards to clean out the tube *E* in case it stops up. It is intended that the vessel should be heated by hot gases passing through the flues *G G*, and its temperature so regulated that the sodium passes off in the liquid state. The chlorine generated passes off by the tube *d*. In order to prevent the corrosion of the cover *B*, Grabau has even constructed an apparatus in which it contained an iron lining and was water-cooled.

The method now used by Castner consists in electrolyzing molten caustic soda at the lowest possible temperature. Pure caustic soda melts below redness, and if kept at a temperature

* German Patents (D. R. P.) Nos. 51898 and 56230 (1890).

not more than 20° above its melting point (310° C.), it can be easily and continuously electrolyzed. Arrangements must therefore be provided for keeping the temperature of the bath very constant, and for removing the sodium quickly from the bath in order to prevent loss by corrosion. The apparatus consists of an iron crucible, embedded in brickwork, in which

FIG. 22.

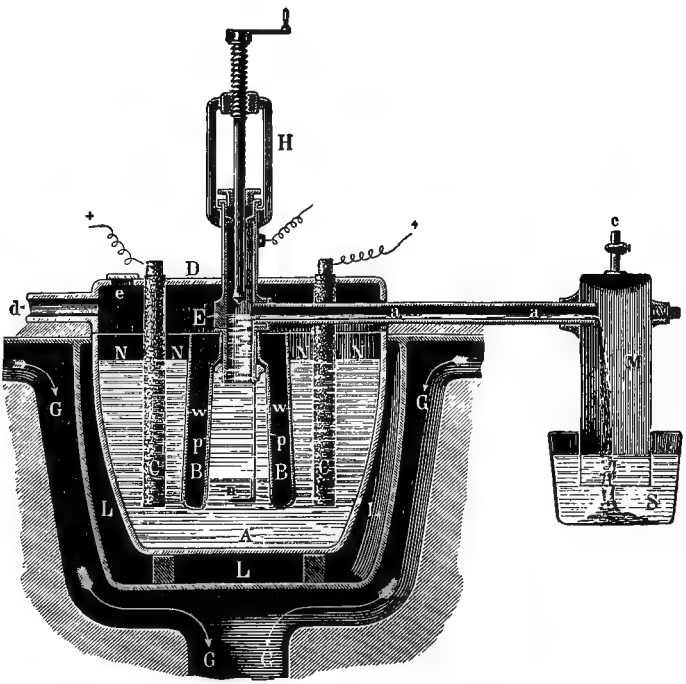

the caustic soda is melted by the heat of a circular gas burner surrounding the pot (Fig. 23). The negative electrode passes up through the bottom of the pot, the space between it and the sides of the hole being allowed to fill up with solid caustic. A tubular sleeve of iron descends from the cover and envelopes the top of this electrode. Outside of this are the positive electrodes. An opening is provided in the cover for the escape of

gas and introduction of a thermometer. In operation, the heat caused by the passage of the current is sufficient to keep the bath melted. The free sodium floats on the surface of the bath

FIG. 23.

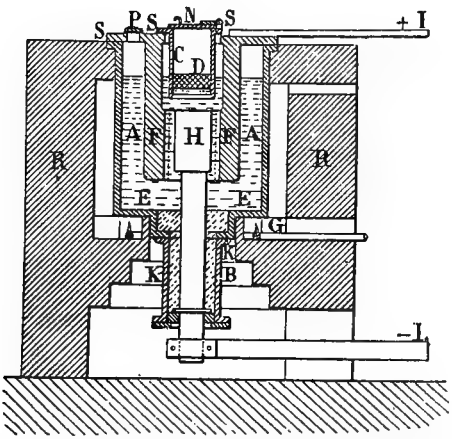

inside the iron sleeve surrounding the negative electrode, and is skimmed off with a small ladle having fine perforations. The operation is continuous, and affords sodium at a cost probably not greater than 15 cents per pound.

CHAPTER VIII.

THE REDUCTION OF ALUMINIUM COMPOUNDS FROM THE STANDPOINT OF THERMAL CHEMISTRY.

THE branch of chemical science called thermal chemistry may be said to be yet in its infancy. Although an immense mass of thermal data has been accumulated, yet the era of great generalizations in this subject has not yet been reached; and although we know with a fair degree of accuracy the heat of combination of thousands of chemical compounds, including nearly all the common ones, yet the proper way to use these data in predicting the possibility of any proposed reaction remains almost unknown. The principal barriers in the way are two: 1st, the unknown quantities entering into almost every chemical reaetion thermally considered, *i. e.*, the heat of combination of elementary atoms to form molecules of the elements; 2d, the uncertainty as regards the critical temperature at which a given exchange of atoms and consequent reaction will take place. We will explain what is meant by these statements.

To illustrate, let us consider the case of hydrogen uniting with oxygen to form water according to the formula—

$$2(H—H) + (O = O) = 2H_2O$$

where (H—H) and (O = O) represent respectively molecules of hydrogen and oxygen. Now, as 1 kilo of hydrogen unites with 8 of oxygen to form 9 of water, setting free 34,462 units of heat (calories), if we take the atomic weights in the above reaction as representing kilos, we shall have the thermal value of the reaction $4 \times 34{,}462 = +137{,}848$ calories. But this quantity is evidently the algebraic sum of the heat evolved in

the union of 4 kilos of hydrogen atoms with 32 kilos of oxygen atoms, and the heat absorbed in decomposing 4 kilos of hydrogen gas into atoms and 32 kilos of oxygen gas into atoms. These two latter quantities are unknown, though a few chemists have concluded from studies on this question that they are probably very large. It has been calculated that the reaction

$$H + H = (H—H) \text{ sets free } 240{,}000 \text{ calories,}$$

and

$$O + O = (O = O) \text{ sets free } 147{,}200 \text{ calories;}$$

If these numbers are approximately true, then

$$4H + 2O = 2H_2O \text{ would set free about } 773{,}000 \text{ calories.}$$

If these quantities are really anything like so large, and if they are at some time determined with precision, thermo-chemical principles and conclusions will be greatly modified. Meanwhile, predictions based on the data we have, lose all possibility of certainty, and so we need to keep in mind in our further discussion that our deductions at the best are only probabilities. Further, suppose that we mix 1 kilo of hydrogen gas and 8 kilos of oxygen gas, put them in a tight vessel and keep them at the ordinary temperature. No reaction will take place in any length of time, even though 34,462 calories would be set free thereby. The explanation of this is that the atoms of hydrogen and oxygen are so firmly bound to each other in the molecules, that the dissimilar atoms have not strength of affinity sufficient to break away in order to combine. It is well known that a spark only is necessary to cause an explosive combination of the gases under the above conditions, the temperature of the spark expanding the gases coming in contact with it, causing the atoms to swing with more freedom in the molecules; and as soon as two atoms of hydrogen come within the sphere of attraction of an atom of oxygen and form a molecule of water, the heat liberated is immediately communicated to the adjacent atoms, and almost instantaneously the entire gases have combined. The same principle undoubtedly holds true

in cases of reduction. Carbon may be mixed with litharge and the mixture left in the cold forever without reacting, but at a certain temperature the carbon will abstract the oxygen. The temperatures at which reactions of this nature will take place are often determined experimentally.

There are other points which are somewhat indeterminate in these discussions, such as the influence of the relative masses of the reacting bodies, their physical states, *i. e.*, solid, liquid or gaseous, also the influence of the physical conditions favoring the formation of a certain compound; but the nature of the subject and the meagreness of data in the particular phenomenon of reduction, render it inexpedient if not impracticable to take these points into consideration.

Starting with the above remarks in view, we will consider the heat generated by the combination of aluminium with certain other elements, as has been determined experimentally, and study, from a comparison with the corresponding thermal data for other elements, what possibilities are shown for reducing these aluminium compounds.

The heat generated by the combination of aluminium with the different elements is given as follows: the first column giving the heat developed by 54 kilos of aluminium (representing Al_2), and the second the heat per atomic weight of the other element, *e. g.*, per 16 kilos of oxygen.

Element.	Compound.	Calories.	Calories.	Authority.
Oxygen.....	* Al_2O_3	391,600	130,500	Berthelot.
		392,600	130,900	Baille & Féry.
Fluorine.....	$2AlF_3$	552,000	92,000	Berthelot.
Chlorine.....	$2AlCl_3$	321,960	53,660	Thomsen.
Bromine.....	$2AlBr_3$	239,440	39,900	"
Iodine.....	$2AlI_3$	140,780	23,460	"
Sulphur.....	Al_2S_3	124,400	41,467	Sabatier.

* Berthelot's number represented the formation of the hydrated oxide, $Al_2O_3.3H_2O$, and, for want of knowing the heat of hydration, has been generally used as the heat of formation of Al_2O_3. Recently, J. B. Baille and C. Féry (Ann. de Chim. et de Phys., June, 1889, p. 250) have, by oxidizing aluminium amalgam, obtained the above figure for the heat of formation of Al_2O_3, and determined that the heat of hydration is 3000 calories, which would make the heat of formation of the hydrated oxide 395,600.

Let us consider the theoretical aspect of the reduction of alumina. The heat given out by other elements or compounds which unite energetically with oxygen is as follows, the quantity given being that developed by combination with 16 kilos (representing one atomic weight) of oxygen.

Element.	Compound.	Calories.
Aluminium	**Al_2O_3**	**130,500**
Sodium	Na_2O	99,760
Potassium	K_2O	100,000 (?)
Barium	BaO	124,240
Strontium	SrO	128,440
Calcium	CaO	130,930
Magnesium	MgO	145,860
Manganese	MnO	95,000 (?)
Silicon	SiO_2	110,000
Zinc	ZnO	85,430
Iron	Fe_2O_3	63,700
Lead	PbO	50,300
Copper	CuO	37,160
"	Cu_2O	40,810
Sulphur	SO_2	35,540
Hydrogen	H_2O	68,360
Carbon	CO	29,000
"	CO_2	48,480
Carbonic anhydride	CO_2	67,960
Potassium cyanide	KCyO	72,000

On inspecting this list we find magnesium to be the only metal surpassing aluminium, while calcium is about the same. This would indicate that the reaction

$$Al_2O_3 + 3Mg = Al_2 + 3MgO$$

would, if it were possible to bring the alumina and magnesium in the proper conditions for reacting, develop about

$$(145{,}860 - 130{,}500) \times 3 = 46{,}080 \text{ calories,}$$

and points to the possibility of reducing alumina by nascent, molten, or vaporized magnesium, under certain conditions. In fact, since this paragraph was first written, in 1890, Dr. Clemens Winkler has succeeded in performing the reduction in part.*

* Berliner Berichte, 1890, p. 772.

He found that when alumina was heated with magnesium powder in a current of hydrogen, a nearly black powder resulted, containing a lower oxide of aluminium, AlO, the reaction being

$$2Al_2O_3 + Mg = MgO.Al_2O_3 + 2AlO\ ;$$

the magnesia formed uniting with alumina to form an aluminate.

We notice further the fact that sodium or potassium could not reduce alumina without heat being absorbed in large quantity, and it is interesting to remember that some of the first attempts at isolating aluminium by using potassium were made on alumina, and were unsuccessful, so that it is practically acknowledged that while these metals easily reduce other aluminium compounds (according to reactions which are thermally possible, as we shall see later on) yet they cannot reduce alumina, under any conditions so far tried.

When we consider the case of reduction by the ordinary reducing agents, hydrogen, carbon, or potassium cyanide, we are confronted in every case with large negative quantities of heat, *i. e.*, deficits of heat. So large do these quantities appear that it is very small wonder that the impossibility of these reductions occurring under any conditions has been strongly affirmed, For instance

$$Al_2O_3 + 6H = Al_2 + 3H_2O$$

would require

(130,500—68,360) × 3	=		186,420 calories.
Al_2O_3	$+ 3C$	$= Al_2 + 3CO$	304,500 calories.
Al_2O_3	$+ 1\frac{1}{2}C$	$= Al_2 + 1\frac{1}{2}CO_2$	246,060 calories.
Al_2O_3	$+ 3KCy$	$= Al_2 + 3KCyO$	175,500 calories.
Al_2O_3	$+ 3CO$	$= Al_2 + 3CO_2$	187,620 calories.

The above quantities represent the differences between the heats of formation of alumina and the product of the reduction, assuming the reaction to take place at ordinary temperatures. At high temperatures these heats of formation are in

general less than they would be at low heats, and if the heat of formation of alumina decreases faster than the heat of combination of the reducing agent with oxygen, the differences noted above would be less and the reaction easier to produce. This must be what actually takes place. For instance, at the heat of an electric furnace, say 2500° to 3000°C., molten alumina is reduced by carbon present in large quantity, that is, the difference beiween the heats of formation of Al_2O_3 and $3CO$ has become so small that the reaction takes place. Similarly, Warren has recently reduced alumina by heating it in a lime tube by an oxy-hydrogen blow-pipe, passing hydrogen through the tube. We here have a reaction which is negative by 186,000 calories at ordinary temperatures, taking place at a temperature probably not over 2000°C.

The conditions which render the carrying out of these difficult reductions possible are therefore:

1. A high temperature, which weakens the heat of formation of alumina.

2. An excess of the reducing agent, which is thus assisted simply by the overpowering influence of its mass.

3. Fluidity of the substance to be reduced.

4. Intimate contact with the reducing agent.

5. Favorable conditions for the formation and removal of the gaseous products of the reduction.

Concerning these, I would remark that the fluidity of the substance to be reduced may be attained by other means than a high temperature. The alumina may, for instance, be liquefied by solution in a bath of molten cryolite. If we dissolve it in molten caustic soda we get a combination of alumina and soda which will remain fluid if too much alumina is not added. Such fluidity also allows much more intimate contact with the reducing agent if it is a solid. If the reducing agent is a gas, most intimate contact is obtained by finely pulverizing the alumina. If the reducing agent is a solid and the product of the reduction would be a gas, its formation would be accelerated by reducing the pressure in the apparatus. In other

words, a partial vacuum would undoubtedly aid in bringing about the reduction, and would help to keep the aluminium in the metallic state by removing quickly the product of reduction and so preventing re-oxidation. I have no hesitation in affirming that since we now know that carbon does reduce molten alumina below 3000°, and hydrogen reduces solid alumina at 2000°, the application of correct principles by intelligent investigators, with properly constructed apparatus, would undoubtedly result in discovering methods of producing the same reactions at lower temperatures and on a larger scale. Whether these methods of producing aluminium could compete with the present electrolytic ones is another question, but it is certainly intéresting to mark the possibility of processes which some future investigator may bring to commercial success.

As the basis of our discussion of the reduction of aluminium chloride, bromide, or iodide, we give a table of heat developed by the combination of some of the elements with one atomic weight (in kilos) of each of these haloids.

Element.	Compound.	Calories.	Compound.	Calories.	Compound.	Calories.
Aluminium..	$AlCl_3$	53,660	$AlBr_3$	40,000	AlI_3	23,460
Potassium	KCl	105,600	KBr	95,300	KI	80,100
Sodium.....	NaCl	97,690	NaBr	85,700	NaI	69,000
Lithium.....	LiCl	93,810	$BaBr_2$			
Barium	$BaCl_2$	97,370	$SrBr_2$	85,000		
Strontium	$SrCl_2$	92,270	$CaBr_2$	78,900		
Calcium.....	$CaCl_2$	84,910	.....	70,400		
Magnesium. ..	$MgCl_2$	75,500				
Manganese ...	$MnCl_2$	56,000				
Zinc	$ZnCl_2$	50,600† 48,600*	$ZnBr_2$	43,100† 40,640† 37,500*	ZnI^2	30,000‡ 26,600 24,500
Lead.....	$PbCl_2$	41,380	$PbBr_2$	32,200	PbI_2	20,000
Mercury.....	Hg_2Cl_2	41,275	Hg_2Br_2	34,150	Hg_2I_2	24,200
Tin.....	$SnCl_2$	40,400				
Iron.....	$FeCl_2$	41,000	$FeBr_2$	24,000	FeI_2	8,000†
Copper	Cu_2Cl_2	32,875	Cu_2Br_2	25,000	Cu_2I_2	16,000
Hydrogen. ...	HCl	22,000	HBr	8,400	HI	—6,000

* Thomsen. † Andrews. ‡ Jahresbericht der Chemie, 1878, p. 102.

On inspecting this table we notice that, in general, all the

metals down to zinc develop more heat in forming chlorides, and very probably also in forming bromides and iodides. A reaction, then, between aluminium chloride and any of these metals, forming aluminium and a chloride of the metal, would be exothermic, which means, generally speaking, that if aluminium chloride and any one of these metals were heated together to the critical point at which the reaction could begin, the reaction would then proceed of itself, being continued by the heat given out by the first portions which reacted. Zinc seems to lie on the border line, and the evidence as to whether zinc will practically reduce these aluminium compounds is still contradictory, as may be seen by examining the paragraphs under "Reduction by Zinc." (Chap. XII.)

Of the first six metals mentioned in the table after aluminium, only potassium and sodium are practically available. The reaction

$$AlCl_3 + 3K = Al + 3KCl \text{ develops } 155{,}820 \text{ cal.}$$
$$AlCl_3 + 3Na = Al + 3NaCl \text{ develops } 132{,}090 \text{ cal.}$$

and the result of this strong disengagement of heat is seen when, on warming these ingredients together, the reaction once commenced at a single spot all external heat can be cut off, and the resulting fusion will become almost white hot with the heat developed. In fact, the heat developed in the second reaction would theoretically be sufficient to heat the aluminium and sodium chloride produced to a temperature between 3000° and 4000°.

Magnesia should act in a similar manner, though not so violently, since

$$2AlCl_3 + 3Mg = Al_2 + 3MgCl_2 \text{ develops } 131{,}000 \text{ cal.}$$

And manganese possibly also, since

$$2AlCl_3 + 3Mn = Al_2 + 3MnCl \text{ develops } 14{,}040 \text{ cal.}$$

The reduction of aluminium chloride, bromide, or iodide by hydrogen is thermally strongly negative, which would indicate a very small possibility of the conditions ever being arranged so

as to render the reaction possible. For instance, taking the most probable case,

$$AlCl_3 + 3H = Al + 3HCl \text{ requires } 94{,}980 \text{ calories.}$$

The only probable substitutes for sodium in reducing aluminium chloride are thus seen to be magnesium (whose cost will probably be always greater than that of aluminium), manganese (which may sometime be used in the form of ferro-manganese for producing ferro-aluminium), and zinc (whose successful application to this purpose would be a most promising advance in the metallurgy of aluminium).

In 1886 Moissan isolated fluorine, and in 1889 he and Berthelot measured the heat of formation of hydrofluoric acid. With this datum, it became possible to calculate a table of the heat of formation of the fluorides.* These can now be given as follows, stating the heat evolved by combination with one atomic weight (19 kilos) of fluorine.

Element.	Compound.	Heat evolved.
Potassium	KF	110,000
Sodium	NaF	109,700
Barium	BaF_2	112,000
Strontium	SrF_2	112,000
Calcium	CaF_2	108,000
Magnesium	MgF_2	105,000
Aluminium	**AlF_3**	**92,000**
Manganese	MnF_2	72,000
Zinc	ZnF_2	69,000
Cadmium	CdF_2	61,000
Iron	FeF_2	63,000
Cobalt	CoF_2	60,000
Nickel	NiF_2	59,500
Copper	CuF_2	44,000
Silver	AgF	25,500
Hydrogen	HF (gas)	37,600
"	" (in solution)	49,400

It follows from an inspection of these quantities that the fluorides are stronger compounds than either the oxides, chlorides, bromides or iodides. It is also seen that aluminium

* See a paper on this subject, by the author, in the Journal of the Franklin Institute, June, 1891.

stands in the same relative position as in the chlorides, except that it is here stronger than manganese or zinc. It follows that only sodium, potassium or magnesium of the available metals willl reduce aluminium fluoride. For such reductions the latter must be liquefied by mixture with a fusible salt not acted on by the reducing agent. Thus, we would have

$$2AlF_3 + 6Na = 6NaF + 2Al, \text{ evolving } 106{,}200 \text{ calories.}$$

$$2AlF_3 + 3Mg = 3MgF_2 + 2Al, \text{ evolving } 78{,}000 \text{ calories.}$$

The reaction with zinc would absorb heat as follows:

$$2AlF_3 + 2Zn = 2ZnF_2 + 2Al, \text{ absorbing } 138{,}000 \text{ calories.}$$

While the first two reactions take place easily, at a red heat, the latter is nearly impracticable. The writer brought zinc into contact with highly heated cryolite ($AlF_3.3NaF$), and obtained 0.6 per cent. of aluminium in the zinc.* The temperature was a bright red, and this small amount of reduction shows that an excess of zinc at a high temperature will to a small extent overcome the affinity of aluminium for fluorine. Manganese in the form of ferro-manganese, might take up even a larger percentage of aluminium than the above, yet no substantial amount of reduction can be looked for from these elements.

In order to discuss the thermal relations of aluminium sulphide, we will make use of the following data, the heat developed being per atomic weight (32 kilos) of sulphur combining:

Element.	Compound.	Calories.
Aluminium	Al_2S_3	**41,467**
Potassium	K_2S	103,700
Sodium	Na_2S	88,200
Calcium	CaS	92,000
Strontium	SrS	99,200
Magnesium	MgS	79,600
Manganese	MnS	46,400
Zinc	ZnS	41,326
Iron	FeS	23,576
Copper	Cu_2S	20,270
Lead	PbS	20,430
Hydrogen	H_2S	4,740
Carbon	CS_2	—14,500

* See details in Chapter XII.

These figures point to the easy reduction of aluminium sulphide by potassium, sodium, or magnesium, and its possible reduction by manganese and zinc. The other metals would require exceptional conditions, perhaps, of temperature, for their action. It is interesting to note that two observers have determined from the deposition of the metals from solution by hydrogen sulphide, that the order of the affiinity of the metals for sulphur is first the alkaline metals, then the others in the following order: copper, lead, zinc, iron, manganese, and then aluminium and magnesium—with the remark that the affiinities of the latter two for sulphur appear quite insignificant. The explanation of this difference is that the metals last mentioned form sulphides which are not stable in water, but are immediately decomposed according to the reaction

$$3\ Al_2S_3 + 3\ H_2O = Al_2O_3 + 3H_2S, \text{ evolving } 77{,}840 \text{ calories,}$$

while the alumina produced is immediately soluble in the weak acid solution and at once disappears. It follows that these elements are not precipitated as easily from solution as those whose sulphides are not thus decomposed by water.

The reduction of aluminium sulphide by copper, tin and iron is in a measure possible when the operation is conducted at a high temperature and there is an excess of reducing metal present. Under these conditions, a part of the aluminium sulphide is reduced and an alloy formed, but such reactions cannot approach in completeness those reactions which are strongly endothermic. The reduction by hydrogen is seen to be highly improbable, and by carbon still more so.

The question of reducing aluminium compounds by the use of electricity is a very different question. Looked at as a reducing or decomposing agent, the electric current is almighty. A current with a tension of 1 volt will decompose any fluoride, chloride, bromide or iodide whose heat of combination with one atom weight of fluorine is less than 23,000 calories; at a tension of two volts, any less than 46,000 calories; and therefore at a tension of five volts would decompose the strongest of any of

these salts. Such a current only means half a dozen ordinary copper sulphate batteries connected in tension. For oxides and sulphides, the heat of combination with one-half an atomic weight must be used, which quantity is equal in combining power to one whole atomic weight of the above elements, and then the same rule applies. We can thus calculate the voltage required to decompose the following anhydrous molten compounds—

Element.	Fluoride.	Chloride.	Oxide.	Sulphide.
Potassium	4.8	4.6	2.2	2.3
Sodium	4.7	4.3	2.2	1.9
Barium	4.9	4.3	2.7	2.2
Strontium	4.9	4.0	2.75	2.2
Calcium	4.7	3.7	2.85	2.0
Magnesium	4.6	3.3	3.2	1.7
Aluminium	**4.0**	**2.3**	**2.8**	**0.9**
Manganese	3.1	2.4	2.1	1.0
Zinc	3.0	2.3	1.9	0.9
Iron	2.7	1.8	1.5	0.5
Nickel	2.5	1.6	1.3	0.4
Copper	1.9	1.4	0.9	0.4
Silver	1.1	1.3	0.1	0.1
Hydrogen	1.6	1.0	1.5	0.1

A critical comparison of these figures leads to some very interesting conclusions. We notice, in the first place, that in the fluorides there is a very sharp drop *after* aluminium; in these salts aluminium has closer resemblance to the alkaline earth fluorides, while manganese and zinc resemble the ordinary metals. In the chlorides, there is a sharp drop *before* aluminium, leaving it in stronger resemblance to the zinc, manganese and lower metallic salts. In the oxides, aluminium is again classed with the alkaline earth metals, and sharply separated from the lower metallic oxides. Attention is particularly called to the irregularity of the alkaline metals, whose oxides are as easily decomposed as those of the metals below aluminium. This explains why we can reduce these alkaline metals more easily by carbon than we can alumina, and yet we can use the alkaline metal to react on a salt of aluminium and get metallic

aluminium. The high voltage required to decompose magnesium oxide also explains the wonderful efficiency of magnesium as a reducing agent when acting on the oxides. In the list of sulphides, we again notice a sharp drop *before* aluminium, leaving it in close correspondance with manganese and zinc. The very low voltage required is also noticeable; a single Daniell cell should be able to produce decomposition. Take a bath, for instance, in which alumina is being decomposed using a tension of 5 volts, of which 2.8 is absorbed in decomposition and 2.2 in overcoming other resistances. If aluminium sulphide were the material decomposed, assuming other resistances the same as before, the total resistance of the bath would be overcome by 3.1 volts; or, in other words, it would require only 62 per cent. of the power to produce the same weight of aluminium. The sulphide thus presents great advantage in respect to ease of decomposition.

Next to the sulphide, the chloride is the easiest to decompose, but both these salts are difficult to produce, and herein lies their chief disadvantage.

It can be furthermore observed, that if we mix these various salts into one bath, and use an electric current carefully regulated as to tension, we can act on one ingredient without disturbing to any extent the others present. We could, for instance, mix aluminium chloride with any fluoride down to that of zinc, and by a tension of 2.5 volts or a little over separate out only alumininum. We could mix alumina with any fluoride or chloride above aluminium in the list, and get only aluminium from the bath. The fact is, however, that alumina is not dissolved by the chlorides, but only by the fluorides. These latter are therefore available, and are the principal salts used at present in the aluminium industry. Thus, in Hall's process we have present in the bath

Alumina	requiring	2.8	volts for	decomposition.
Aluminium fluoride	"	4.0	"	"
Sodium "	"	4.7	"	"

When the current is passed through such a mixture, and its

tension does not rise abnormally high, the bath being kept saturated with all the alumina it can dissolve, the only ingredient decomposed is the alumina.

In Minet's process there are present:

Alumina,	requiring	2.8 volts.
Aluminium fluoride,	"	4.0 "
Sodium fluoride,	"	4.7 "
Sodium chloride,	"	4.3 "

The minimum electro-motive force required to decompose this bath at 900° is 2.4 volts; at 1100°, 2.17 volts. The electro-motive force of carbon burning to carbonic oxide at those temperatures is, however, 0.65 volts, so that the voltage rerequired to decompose liquid alumina at these temperatures is 0.65 volts higher than the figure given. We therefore have these data for the decomposition of alumina:

Temperature.	Voltage for Decomposition.	Heat of Formation.
0°	2.82	392,600 (solid aluminium.)
0°	2.78	387,200 (liquid aluminium).
900°	3.05	424,600 (liquid aluminium).
1100°	2.82	392,600 (liquid aluminium).

The equation for the voltage required to decompose alumina producing liquid aluminium is therefore:

$$V = 2.78 + 0.00129\ t - 0.00000128\ t^2,$$

and the heat required to decompose the molecule of alumina is

$$Q = 387{,}200 + 192\ t - 0.1766\ t^2.$$

This formula is extremely interesting from a thermo-chemical point of view in enabling us to calculate theoretically the temperature at which hydrogen or carbon begins to reduce alumina. The heat of formation of gaseous water at zero is accurately known, and the experiments of Mallard and Le Chatelier on the specific heats of hydrogen, oxygen and water vapor enable us to calculate the heat of formation at any desired tem-

perature. From these data we calculate the heat of formation of $3H_2O$ to be represented by the formula:

$$Q = 174,300 + 7.71\ t - 0.0072\ t^2.$$

Now to find the temperature at which hydrogen gas would begin to reduce alumina, we equate this formula with the one given for the heat of the formation of alumina, and have

$$387,200 + 192\ t - 0.1766\ t^2 = 174,300 + 7.71\ t - 0.0072\ t^2$$

from which

$$t = 1785°C.$$

This will be the temperature at which the heat of formation of $3H_2O$ will be exactly equal to the heat of formation of Al_2O_3, and consequently immediately above this temperature reduction will begin if the physical conditions are favorable for the reaction taking place.

On a similar principle we can calculate the temperatnre at which carbon will begin to reduce aluminium, except that the operation is more difficult because of the variable specific heat of carbon. I have calculated from Weber's results that the heat in carbon from zero to high temperatures may be expressed as

$$Q = 0.5\ t - 120.$$

Taking this quantity, in connection with the specific heats of oxygen and carbonic oxide as determined by Mallard and Le Chatelier at high temperatures, we have for the heat of formation of $3CO$ at any temperature t above 1000°, the expression

$$Q = 83,355 + 8.6472\ t - 0.0009\ t^2.$$

For finding the temperature at which reduction begins we have

$$387,200 + 192\ t - 0.1716\ t^2 = 83,355 + 8.6472\ t - 0.0009\ t^2$$

from which

$$t = 1980°.$$

The temperatures above calculated appear much lower than has heretofore been deemed possible, but they are supported by experimental evidence; viz., the reduction of alumina by hydrogen performed by Warren, at a temperature which it is hardly possible could have been higher than 2000°; and the production of pig-iron containing over 1 per cent. of aluminium in a Pennsylvania blast furnace. The highest temperature attained in this furnace, not of very modern construction, could not have exceed 2000° C. (For details, see Chapter XII.)

If in place of free hydrogen gas or free carbon we use as a reducing agent a combination of these two which *gives out* heat in its dissociation into carbon and hydrogen, we would have a more efficient reducing agent than if the constituents were used separately. Such a compound is Acetylene, C_2H_2, which absorbs heat in its formation and therefore gives out heat in its decomposition. At ordinary temperatures, Berthelot has found that

$$C_2 + H_2 = C_2H_2 \text{ absorbs } 51{,}500 \text{ calories.}$$

We do not know exactly how this number varies with the temperature, as we lack the specific heat of C_2H_2, but we know that it does not change very much. We would therefore have the reduction equation as follows—

$$Al_2O_3 + C_2H_2 = 2Al + 2CO + H_2O$$

and the heat requirements as follows—

Reducing Al_2O_3	$387{,}200 + 192.6t - 0.1716t^2$	(1)
Developed in forming $2CO$	$55{,}570 + 5.76t - 0.0006t^2$	(2)
" " " H_2O	$58{,}000 + 2.57t - 0.0025t^2$	(3)
" " decomposing C_2H_2	$51{,}500$	(4)

If we put (1) = (2) + (3) + (4) and solve for t, we obtain the theoretical temperature at which Acetylene should begin to reduce alumina as

$$t = 1870°C.$$

This temperature, it will be observed, is not so low as that

calculated for pure hydrogen. Six months ago, this calculation would have been of purely scientific interest, because pure acetylene was a difficult substance to procure; but a very practical interest has been given it by the recent invention of Mr. Thomas L. Willson of Brooklyn*, whereby pure acetylene can be manufactured at a cost approximating 2 cents per pound. Since the gas should theoretically reduce double its weight of aluminium, if perfectly utilized for reduction, the cost of the reducing agent per pound of aluminium would be very small. It is to be hoped that the possibility of the above reaction may be tested with this powerful reducing agent.

Before closing this subject of the thermal aspect of the reduction of aluminium compounds, it may be interesting to notice some of the reactions which are of use in the aluminium industry. It is well known that while chlorine gas can be passed over ignited alumina without forming aluminium chloride, and while carbon can be in contact with alumina at a white heat without reducing it, yet the concurrent action of chlorine and carbon will change the alumina into its chloride, a compound with a lower heat of formation. Thus—

$$Al_2O_3 + 3C = Al_2 + 3CO \text{ requires } 304{,}500 \text{ cal.}$$

But $Al_2O_3 + 3C + 6Cl = 2AlCl_3 + 3CO$ requires a quantity of heat equal to the 304,500 cal. minus 321,960, the heat of formation of aluminium chloride, or in other words, 17,360 cal. is evolved, showing that the reaction is one of easy practicability. If it be inquired whether there is not some chloride which would act on alumina to convert it into chloride, we would remark that if we can find a chloride whose heat of formation is as much greater than the heat of formation of the corresponding oxide as the heat of formation of aluminium chloride is greater than that of alumina, then such a chloride might react.

* See description in Engineering and Mining Journal, Dec. 15, 1894.

To be more particular, to convert alumina into aluminium chloride, a deficit of 391,600 — 321,960 = 69,640 calories must be made up. If we know of an element which in uniting with 3 atom weights (48 kilos) of oxygen gives out 69,640 calories more heat, or a still greater excess, than in uniting with 6 atom weights (213 kilos) of chlorine, then the chloride of that element might perform the reaction. Now—

$$6Na + 3O = 3Na_2O \text{ evolves } 299{,}280 \text{ cal.}$$

and

$$6Na + 6Cl = 6NaCl \text{ evolves } 586{,}140 \text{ cal.}$$

leaving evidently a balance of 286,860 calories in the opposite direction to what we are looking for. And so for every metal except aluminium, I find the heat of formation of its chloride greater than an equivalent quantity of its oxide. The only element which I know to possess the opposite property is hydrogen, for—

$$6H + 3O = 3H_2O \text{ evolves } 205{,}080 \text{ cal.}$$

and

$$6H + 6Cl = 6HCl \text{ evolves } 132{,}000 \text{ cal.}$$

and therefore the reaction—

$$Al_2O_3 + 6HCl = 2AlCl_3 + 3H_2O$$

would evolve according to our calculations (205,080—132,000)—69,640=3,440 calories, and would be thermally considered a possible reaction. Moreover, as a secondary effect, the water formed is immediately seized by the aluminium chloride, for the reaction

$$2AlCl_3 + 3H_2O = 2AlCl_3.3H_2O \text{ evolves } 153{,}690 \text{ cal.}$$

and thus increases the total heat developed in the decomposition of the alumina to 158,130 calories. The result of this reaction is therefore the hydrated chloride, which is of no value for reduction by sodium, since when heated it decomposes into alumina and hydrochloric acid again, that is, it will decompose before giving up its water, and the water if undecomposed, or the acid if it decomposes, simply unites with the

sodium without affecting the alumina. The immense heat of hydration, 153,690 calories, is so much greater than any other known substance, that it is vain that we seek for any material which might abstract the water and leave anhydrous aluminium chloride.

Analagous to the reaction by which aluminium chloride is formed from alumina is the reaction made use of for obtaining aluminium sulphide, yet with some thermal considerations of a different and highly interesting kind. If a mixture of alumina and carbon is ignited and, instead of chlorine, sulphur vapor is passed over it, no aluminium sulphide will be formed. An explanation of this fact is seen on discussing the proposed reaction thermally.

$$Al_2O_3 + 3C + 3S - Al_2S_3 + 3CO \text{ requires } 180{,}200 \text{ cal.}$$

It will be remembered that the similar reaction with chlorine evolved 17,360 calories; the quantity causing this difference is the heat of combination of aluminium sulphide, which is 321,960 —124,400 = 197,560 calories less than that of aluminium chloride, changing the excess of 17,360 calories into a deficit of 180,200 calories. This large negative quantity shows *à priori* that the reaction could be made to occur only under exceptional conditions, and its non-occurrence under all conditions so far tried gives evidence of the utility of the study of thermochemistry, at least as a guide to experiment. However, while carbon and sulphur cannot convert alumina into aluminium sulphide, carbon bisulphide can, for a current of the latter led over ignited alumina converts it into aluminium sulphide. The reaction taking place is

$$Al_2O_3 + 3CS_2 = Al_2S_3 + 3COS.$$

Now, since carbon and sulphur by themselves could not perform the reaction, we should be very apt to reason that a compound of carbon and sulphur would be still less able to do so, since the heat absorbed in dissociating the carbon-sulphur

compound would cause a still greater deficit of heat. But here is precisely the explanation of the paradox. Carbon bisulphide is one of those compounds, not frequent, which has a negative heat of formation (—29,000 calories), *i. e.*, heat is absorbed in large quantity in its formation, and therefore, per contra, heat is given out in the same quantity in its decomposition. The heat of formation of carbon oxysulphide being 37,030 calories, we can easily compute the thermal value of the reaction just given.

Heat absorbed.		
Decomposition of alumina		391,600 cal.
Heat developed.		
Decomposition of carbon bisulphide	87,000	
Formation of carbon oxysulphide	111,090	
" of aluminium sulphide	124,400	
		322,490 cal.
Deficit of heat		69,110 "

It is thus seen that the reaction with carbon bisulphide is less than one-half as strongly negative as the reaction with carbon and sulphur alone, and we therefore have an explanation of the fact that the reaction with carbon bisulphide is easily practicable, while the other is not. We do not know enough about the variation of the heats of formation of aluminium sulphide and carbon oxysulphide to be able to make calculations as accurately as was possible with the question of reducing alumina, but if all the heats of formation remained constant except that of alumina, the 69,000 calories deficit would be made up by the decrease in the heat of formation of that substance at 975° C., which is somewhere about the temperature at which the reaction really takes place.

CHAPTER IX.

REDUCTION OF ALUMINIUM COMPOUNDS BY MEANS OF POTASSIUM OR SODIUM.

THE methods comprised under this heading may be conveniently divided into two classes:—

I. Methods based on the reduction of aluminium chloride or aluminium-sodium chloride.

II. Methods based on the reduction of cryolite or aluminium fluoride.

I.

The methods here included can be most logically presented by taking them in chronological order.

Oerstedt's Experiments (1824).

After Davy's unsuccessful attempts to isolate aluminium by the battery, in 1807, the next chemist to publish an account of attempts in this direction was Oerstedt, who published a paper in 1824 in a Swedish periodical.* Oerstedt's original paper is thus translated into Berzelius's "Jahresbericht:"†

"Oerstedt mixes calcined and pure alumina, quite freshly prepared, with powdered charcoal, puts it in a porcelain retort, ignites and leads chlorine gas through. The coal then reduces the alumina, and there results aluminium chloride and carbonic oxide, and perhaps also some phosgene, $COCl_2$; the aluminium chloride is caught in the condenser and the gases escape. The sublimate is white, crystalline, melts about the temperature of boiling water, easily attracts moisture, and evolves heat

* Oversigt over det K. Danske Videnskabemes Selkabs Forhandlingar og dets Medlemmers Arbeider. May, 1824, to May, 1825, p. 15.

† Berz. Jahresb. der Chemie, 1827, vi. 118.

when in contact with water. If it is mixed with a concentrated potassium amalgam and heated quickly, it is transformed; there results potassium chloride, and the aluminium unites with the mercury. The new amalgam oxidizes in the air very quickly, and gives as residue when distilled in a vacuum a lump of metal resembling tin in color and lustre. In addition, Oerstedt found many remarkable properties of the metal and of the amalgam, but he holds them for a future communication after further investigation."

Oerstedt did not publish any other paper, and the next advance in the science is credited to Wöhler, whom all agree in naming as the true discoverer of the metal.

Wöhler's Experiments (1827).

In the following article from Poggendorff's Annalen,* Wöhler reviews the article of Oerstedt's given above, and continues as follows:—

"I have repeated this experiment of Oerstedt, but achieved no very satisfactory result. By heating potassium amalgam with aluminium chloride and distilling the product, there remained behind a gray, melted mass of metal, but which, by raising the heat to redness, went off as green vapor and distilled as pure potassium. I have therefore looked around for another method or way of conducting the operation, but, unpleasant as it is to say it, the reduction of the aluminium fails each time. Since, however, Herr Oerstedt remarks at the end of his paper that he did not regard his investigations in aluminium as yet ended, and already several years have passed since then, it looks as if I had taken up one of those researches begun auspiciously by another (but not finished by him), because it promised new and splendid results. I must remark, however, that Herr Oerstedt has indirectly by his silence encouraged me to try to attain to further results myself. Before I give the art how one can quite easily reduce the metal, I will say a few words about aluminium chloride and its production (see p. 152).

* Pogg. Ann., 1827, ii. 147.

"I based the method of reducing aluminium on the reaction of aluminium chloride on potassium, and on the property of the metal not to oxidize in water. I warmed in a glass retort a small piece of the aluminium salt with some potassium, and the retort was shattered with a strong explosion. I tried then to do it in a small platinum crucible, in which it succeeded very well. The reaction is always so violent that the cover must be weighted down, or it will be blown off; and at the moment of reduction, although the crucible be only feebly heated from outside, it suddenly glows inside, and the platinum is almost torn by the sudden shocks. In order to avoid any mixture of platinum with the reduced aluminium, I next made the reduction in a porcelain crucible, and succeeded then in the following manner: Put in the bottom of the crucible a piece of potassium free from carbon and oil, and cover this with an equal volume of pieces of aluminium chloride. Cover and heat over a spirit lamp, at first gently, that the crucible be not broken by the production of heat inside, and then heat stronger, at last to redness. Cool, and when fully cold put it into a glass of cold water. A gray powder separates out, which on nearer observation, especially in sunlight, is seen to consist of little flakes of metal. After it has separated, pour off the solution, filter, wash with cold water, and dry; this is the aluminium."

In reality, this powder possessed no metallic properties, and moreover, it contained potassium and aluminium chloride, which gave it the property of decomposing water at 100°. To avoid the loss of aluminium chloride by volatilization at the high heat developed during the reaction, Liebig afterwards made its vapors pass slowly over some potassium placed in a long glass tube. This device of Liebig is nearly the arrangement which Wöhler adopted later, in 1845, and which gave him much better results.

Wöhler's Experiments (1845).

The following is Wöhler's second paper published in 1845:*

* Liebig's Annalen, 53, 422.

"On account of the violent incandescence with which the reduction of aluminium chloride by potassium is accompanied, this operation requires great precautions, and can be carried out only on a small scale. I took for the operation a platinum tube, in which I placed aluminium chloride, and near it some potassium in a platinum boat. I heated the tube gently at first, then to redness. But the reduction may also be done by putting potassium in a small crucible, which is placed inside a larger one, and the space between the two filled with aluminium chloride. A close cover is put over the whole, and it is heated. Equal volumes of potassium and the aluminium salt are the best proportions to employ. After cooling, the tube or crucible is put in a vessel of water. The metal is obtained as a gray metallic powder, but on closer observation one can see even with the naked eye small tin-white globules, some as large as pins' heads. Under the microscope magnifying two hundred diameters, the whole powder resolves itself into small globules, several of which may sometimes be seen sticking together, showing that the metal was melted at the moment of reduction. A beaten-out globule may be again melted to a sphere in a bead of borax or salt of phosphorus, but rapidly oxidizes during the operation, and if the heat is continued, disappears entirely, seeming either to reduce boric acid in the borax bead, or phosphoric acid in the salt of phosphorus bead. I did not succeed in melting together the pulverulent aluminium in a crucibe with borax, at a temperature which would have melted cast-iron, for the metal disappeared entirely and the borax became a black slag. It seems probable that aluminium, being lighter than molten borax, swims on it and burns. The white metallic globules had the color and lustre of tin. It is perfectly malleable and can be hammered out to the thinnest leaves. Its specific gravity, determined with two globules weighing 32 milligrammes, was 2.50, and with three hammered-out globules weighing 34 milligrammes, 2.67. On account of their lightness these figures can only be approximate. It is not magnetic, remains white in the air, decomposes water at 100°, not at

usual temperatures, and dissolves completely in caustic potash (KOH). When heated in oxygen almost to melting, it is only superficially oxidized, but it burns like zinc in a blast-lamp flame."

These results of Wöhler's, especially the determination of specific gravity, were singularly accurate when we consider that he established them working with microscopic bits of the metal. It was just such work that established Wöhler's fame as an investigator. However, we notice that his metal differed from aluminium as we know it in several important respects, in speaking of which Deville says: "All this time the metal obtained by Wöhler was far from being pure; it was very difficultly fusible, owing, without doubt, to the fact that it contained platinum taken from the vessel in which it had been prepared. It is well known that these two metals combine very easily at a gentle heat. Moreover, it decomposed water at 100°, which must be attributed either to the presence of potassium or to aluminium chloride, with which the metal might have been impregnated: for aluminium in presence of aluminium chloride in effect decomposes water with evolution of hydrogen."

After Wöhler's paper in 1845, the next improvement is that introduced by Deville in 1854–55, and this is really the date at which aluminium, the metal, became known and its true properties established.

Deville's Experiments (1854).

The results of this chemist's investigations and success in obtaining pure aluminium were first made public at the séance of the French Academy, August 14, 1854, and included mention of an electrolytic method of reduction (see Chap. XI.), as well as of the following on reduction by sodium.*

"The following is the best method for obtaining aluminium chemically pure in the laboratory. Take a large glass tube about four centimeters in diameter, and put into it 200 or 300

* Ann. de Phys. et de Chim., xliii. 24.

grammes of pure aluminium chloride free from iron, and isolate it between two stoppers of amianthus (fine, silky asbestos). Hydrogen, well dried and free from air, is brought in at one end of the tube. The aluminium chloride is heated in this current of gas by some lumps of charcoal in order to drive off hydrochloric acid or sulphides of chlorine or of silicon, with which it is always impregnated. Then there are introduced into the tube porcelain boats, as large as possible, each containing several grammes of sodium, which was previously rubbed quite dry between leaves of filter paper. The tube being full of hydrogen, the sodium is melted, the aluminium chloride is heated and distils, and decomposes in contact with the sodium with incandesence, the intensity of which can be moderated at pleasure. The operation is ended when all the sodium has disappeared, and when the sodium chloride formed has absorbed so much aluminium chloride as to be saturated with it. The aluminium which has been formed is held in the double chloride of sodium and aluminium, $AlCl_3.NaCl$, a compound very fusible and very volatile. The boats are then taken from the glass tube, and their entire contents put in boats made of retort carbon, which have been previously heated in dry chlorine in order to remove all siliceous and ferruginous matter. These are then introduced into a large porcelain tube, furnished with a prolongation and traversed by a current of hydrogen, dry and free from air. This tube being then heated to bright redness, the aluminium-sodium chloride distils without decomposition and condenses in the prolongation. There is found in the boats, after the operation, all the aluminium which had been reduced, collected in at most one or two small buttons. The boats when taken from the tube should be nearly free from aluminium-sodium chloride, and also from sodium chloride. The buttons of aluminium are united in a small earthenware crucible, which is heated as gently as possible, just sufficient to melt the metal. The latter is pressed together and skimmed clean by a small rod or tube of clay. The metal thus collected may be very suitably cast in an ingot mould."

The later precautions added to the above given process were principally directed towards avoiding the attacking of the crucible, which always takes place when the metal is melted with a flux, and the aluminium thereby made more or less siliceous. The year following the publication of these results, this laboratory method was carried out on a large scale at the chemical works at Javel.

Deville's Methods (1855).

The methods about to be given are those which were devised in Deville's laboratory at the Ecole Normale, during the winter of 1854–55, and applied on a large scale at Javel, during the spring of 1855 (March–July). The Emperor Napoleon III. defrayed the expenses of this installation. Descriptions of the methods used for producing alumina, aluminium chloride and sodium at Javel can be found under their respective headings (pp. 134, 153, 180). We here confine our description to the mode of reducing the aluminium chloride by sodium, and the remarks incident thereto. The process has at present only an historic interest, as it was soon modified in its details so as to be almost entirely changed. The following is Deville's description:—

"*Perfectly pure aluminium.*—To obtain aluminium perfectly pure it is necessary to employ materials of absolute purity, to reduce the metal in presence of a completely volatile flux, and finally never to heat, especially with a flux, in a siliceous vessel to a high temperature.

"*Pure materials.*—The necessity of using absolutely pure materials is easy to understand; all the metallic impurities are concentrated in the aluminium, and unfortunately I know no absolute method of purifying the metal. Thus, suppose we take an alum containing 0.1 per cent. of iron and 11 per cent. of alumina; the alumina derived from it will contain 1 per cent. of iron, and supposing the alumina to give up all the aluminium in it, the metal will be contaminated with 2 per cent. of iron.

"*Influence of flux or slag.*—The flux, or the product of the reaction of the sodium on the aluminous material, ought to be volatile, that one may separate the aluminium by heat from the material with which it has been in contact, and with which it remains obstinately impregnated because of its small specific gravity.

"*Influence of the vessel.*—The siliceous vessels in which aluminium is received or melted give it necessarily a large quantity of silicon, a very injurious impurity. Silicon cannot be separated from aluminium by any means, and the siliceous aluminium seems to have a greater tendency to take up more silicon than pure aluminium, so that after a small number of remeltings in siliceous vessels the metal becomes so impure as to be almost infusible.

In order to avoid the dangers pointed out above, Deville recommended following scrupulously the following details in order to get pure aluminium.

"*Reduction of solid sodium.*—The crude aluminium chloride placed in the cylinder *A* (Fig. 23), is vaporized by the fire and

FIG. 24.

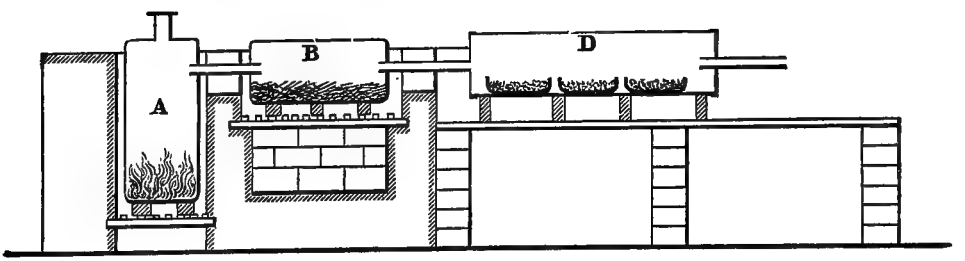

passes through the tube to the cylinder *B*, containing 60 to 80 kilos of iron nails heated to a dull-red heat. The iron retains as relatively fixed ferrous chloride, the ferric chloride and hydrochloric acid which contaminate the aluminium chloride, and likewise transforms any sulphur dichloride (SCl_2) in it into ferrous chloride and sulphide of iron. The vapors on passing out of *B* through the tube, which is kept at about 300°, deposit

spangles of ferrous chloride, which is without sensible tension at that temperature. The vapors then enter *D*, a cast-iron cylinder in which are three cast-iron boats each containing 500 grms. of sodium. It is sufficient to heat this cylinder barely to a dull-red heat in its lower part, for the reaction once commenced disengages enough heat to complete itself, and it is often necessary to take away all the fire from it. There is at first produced in the first boat some aluminium and some sodium chloride, which latter combines with the excess of aluminium chloride to form the volatile aluminium-sodium chloride, $AlCl_3.NaCl$. These vapors of double chloride condense on the second boat and are decomposed by the sodium into aluminium and sodium chloride. A similar reaction takes place in the third boat when all the sodium of the second has disappeared. When on raising the cover it is seen that the sodium of the last boat is entirely transformed into a lumpy black material, and that the reactions are over, the boats are taken out, immediately replaced by others, and are allowed to cool covered by empty boats. In this first operation the reaction is rarely complete, for the sodium is protected by the layer of sodium chloride formed at its expense. To make this disappear, the contents of the boats are put into cast-iron pots or earthen crucibles, which are heated until the aluminium chloride begins to volatilize, when the sodium will be entirely absorbed and the aluminium finally remains in contact with a large excess of its chloride, which is indispensable for the success of the operation. Then the pots or crucibles are cooled, and there is taken from the upper part of their contents a layer of sodium chloride almost pure, while underneath are found globules of aluminium which are separated from the residue by washing with water. Unfortunately, the water in dissolving the aluminium chloride of the flux exercises on the metal a very rapid destructive action, and only the globules larger than the head of a pin are saved from this washing. These are gathered together, dried, melted in an earthen crucible, and pressed together with a clay rod.

The button is then cast in an ingot mould. It is important in this operation to employ only well-purified sodium, and not to melt the aluminium if it still contains any sodium, for in this case the metal takes fire and burns as long as any of the alkaline metal remains in it. In such a case it is necessary to remelt in presence of a little aluminium-sodium chloride.

"Such is the detestable process by means of which were made the ingots of aluminium sent to the Exhibition (1855). To complete my dissatisfaction at the processs, pressed by time and ignorant of the action of copper on aluminium, I employed in almost all my experiments reaction cylinders and boats of copper, so that the aluminium I took from them contained such quantities of this metal as to form a veritable alloy. Moreover, it had lost almost all ductility and malleability, had a disagreeable gray tint, and finally at the end of two months it tarnished by becoming covered with a black layer of oxide or sulphide of copper, which could only be removed by dipping in nitric acid. But, singular to relate, an ingot of virgin silver which had been put alongside the aluminium that the public might note easily the difference in color and weight of the two metals, was blackened still worse than the impure aluminium. Only one of the bars exhibited, which contained no copper, remained unaltered from the day of its manufacture till now (1859). It was some of this cupreous aluminium that I sent to M. Regnault, who had asked me for some in order to determine its specific heat. I had cautioned him at the time of the number and nature of the impurities which it might contain, and the analysis of M. Salvêtat, which is cited in the memoir of Regnault, accords with the mean composition of the specimens that I had produced and analyzed at that time (see p. 54, Analysis 1). It is to be regretted that I gave such impure material to serve for determinations of such splendid precision. I was persuaded to do so only by the entreaties of M. Regnault, who could not wait until I prepared him better. It is also this cupreous aluminium which M. Hulot has called 'hard aluminium,' in a note on the physical properties of this metal

which he addressed to the Academy. Hulot has remarked that this impure metal, which is crystalline in structure, after having been compressed between the dies of the coining press may lose its crystalline structure, to which it owes its brittleness, and become very malleable. It possesses then such strength that it works well in the rolls of a steel rolling mill. Further, this 'hard aluminium' becomes quite unalterable when it has thus lost its texture.

"*Reduction by sodium vapor.*—This process, which I have not perfected, is very easy to operate, and gave me very pure metal at the first attempt. I operate as follows: I fill a mercury bottle with a mixture of chalk, carbon, and carbonate of soda, in the proportions best for generating sodium. An iron tube about ten centimetres long is screwed to the bottle, and the whole placed in a wind furnace, so that the bottle is heated to red-white and the tube is red to its end. The end of the tube is then introduced into a hole made in a large earthen crucible about one-fourth way from the bottom, so that the end of the tube just reaches the inside surface of the crucible. The carbonic oxide (CO) disengaged burns in the bottom of the crucible, heating and drying it; afterwards the sodium flame appears, and then pieces of aluminium chloride are thrown into the crucible from time to time. The salt volatilizes and decomposes before this sort of tuyere, from which issues the reducing vapor. More aluminium salt is added when the vapors coming from the crucible cease to be acid, and when the flame of sodium burning in the atmosphere of aluminium chloride loses its brightness. When the operation is finished, the crucible is broken and there is taken from the walls below the entrance of the tube a saline mass composed of sodium chloride, a considerable quantity of globules of aluminium, and some sodium carbonate, which latter is in larger quantity the slower the operation was performed. The globules are detached by plunging the saline mass into water, when it becomes necessary to notice the reaction of the water on litmus. If the water becomes acid, it is renewed often; if alkaline, the

mass, impregnated with metal, must be digested in nitric acid, diluted with three or four volumes of water, and so the metal is left intact. The globules are reunited by melting with the precautions before given."

Deville's Process (1859).

The process then in use at Nanterre was based on the use of aluminium-sodium chloride, which was reduced by sodium, with cryolite or fluorspar as a flux. The methods of preparing each of these materials were carefully studied out at the chemical works of La Glacière, where, from April, 1856, to April, 1857, the manufacture of aluminium was carried on by a company formed by Deville and a few friends, and from thence proceeded the actual system which was established at Nanterre under the direction of M. Paul Morin when the works at La Glacière were closed. The methods of preparation of alumina, aluminium-sodium chloride and sodium used at Nanterre are placed under their respective headings (pp. 137, 154, 190).

In the first year that the works at Nanterre were in operation there were made:

Aluminium-sodium chloride	10,000 kilos.
Sodium	2,000 "
Aluminium	600 "

The metal prepared improved constantly in quality, M. Morin profiting continually by his experience and improving the practical details constantly, so that the aluminium averaged, in 1859, 97 per cent. pure. (See Analysis 9, p. 54.)

As to the rationale of the process used, aluminium chloride was replaced by aluminium-sodium chloride because the latter is less deliquescent and less difficult of preservation; but the small amount of moisture absorbed by the double chloride is held very energetically, at a high temperature giving rise to some alumina, which encloses the globules of metal with a thin coating, and so hinders their easy reunion to a button. Deville remarked that the presence of fluorides facilitated the reunion

of these globules, which fact he attributed to their dissolving the thin coat of alumina; so that the employment of a fluoride as a flux became necessary to overcome the effect produced primarily by the aluminium-sodium chloride holding moisture so energetically. Deville gives the following account of the development of these improvements: "The facility with which aluminium unites in fluorides is due without doubt to the property which these possess of dissolving the alumina on the surface of the globules at the moment of their formation, and which the sodium is unable to reduce. I had experienced great difficulty by obtaining small quantities of metal poorly united, when I reduced the aluminium-sodium chloride by sodium; M. Rammelsberg, who often made the same attempts, tells me he has had a like experience. But I am assured by a scrupulous analysis that the quantity of metal reduced by the sodium is exactly that which theory indicates, although after many operations there is found only a gray powder, resolving itself under the microscope into a multitude of small globules. The fact is simply that aluminium-sodium chloride is a very poor flux for aluminium. MM. Morin, Debray, and myself have undertaken to correct this bad effect by the introduction of a solvent for the alumina into the saline slag which accompanies the aluminium at the moment of its formation. At first, we found it an improvement to condense the vapors of aluminium chloride, previously purified by iron, directly in sodium chloride, placed for this purpose in a crucible and kept at a red heat. We produced in this way, from highly colored material, a double chloride very white and free from moisture, and furnishing on reduction a metal of fine appearance. We then introduced fluorspar (CaF_2) into the composition of the mixture to be reduced, and we obtained good results with the following proportions:

Aluminium-sodium chloride	400 grammes.
Sodium chloride	200 "
Calcium fluoride	200 "
Sodium	75 to 80 "

"The double chloride ought to be melted and heated almost to low red heat at the moment it is employed, the sodium chloride calcined and at a red heat or melted, and the fluorspar pulverized and well dried. The double chloride, sodium chloride and calcium fluoride are mixed and alternated in layers in the crucible with sodium. The top layer is of the mixture, and the cover is sodium chloride. Heat gently, at first, until the reaction ends, and then to a heat about sufficient to melt silver. The crucible, or at least that part of it which contains the mixture, ought to be of a uniform red tint, and the material perfectly liquid. It is stirred a long time and cast on a well dried, chalked plate. There flows out first a very limpid liquid, colorless and very fluid; then a gray material, a little more pasty, which contains aluminium in little grains, and is set aside; and finally a button with small, metallic masses which of themselves ought to weigh 20 grms. if the operation has succeeded well. On pulverizing and sieving the gray slag, 5 or 6 grms. of small globules are obtained, which may be pressed together by an earthen rod in an ordinary crucible heated to redness. The globules are thus reunited, and when a sufficient quantity is collected the metal is cast into ingots. In a well-conducted operation, 75 grms. of sodium ought to give a button of 20 grms. and 5 grms. in grains, making a return of one part aluminium from three of sodium. Theory indicates one to two and a half, or 30 grms. of aluminium from 75 of sodium. But all the efforts which have been made to recover from the insoluble slag the 4 or 5 grms. of metal not united, but easily visible with a glass, have been so far unsuccessful. There is, without doubt, a knack, a particular manipulation, on which depends the success of an operation which would render the theoretical amount of metal, but we lack it yet. These operations take place, in general, with more facility on a large scale, so that we may consider fluorspar as being suitable for serving in the manufacture of aluminium in crucibles. We employed very pure fluorspar, and our metal was quite exempt from silicon. It is true that we took a precaution which is necessary

to adopt in operations of this kind; we plastered our crucibles inside with a layer of aluminous paste, the composition of which has been given in 'Ann. de Chim. et de Phys.' xlvi. 195. This paste is made of calcined alumina and an aluminate of lime, the latter obtained by heating together equal parts of chalk and alumina to a high heat. By taking about four parts calcined alumina and one of aluminate of lime well pulverized and sieved, moistening with a little water, there is obtained a paste with which the inside of an earthen crucible is quickly and easily coated. The paste is spread evenly with a porcelain spatula, and compressed strongly until its surface has become well polished. It is allowed to dry, and then heated to bright redness to season the coating, which does not melt, and protects the crucible completely against the action of the aluminium and fluorspar. A crucible will serve several times in succession, provided that the new material is put in as soon as the previous charge is cast. The advantages of doing this are that the mixture and the sodium are put into a crucible already heated up, and so lose less by volatilization because the heating is done more quickly, and the crucible is drier than if a new one had been used or than if it had been let cool. A new crucible should be heated to at least 300° or 400° before being used. The saline slag contains a large quantity of calcium chloride, which can be washed away by water, and an insoluble material from which aluminium fluoride can be volatilized.

"Yet the operation just described, which was a great improvement on previous ones, requires many precautions and a certain skill of manipulation to succeed every time. But nothing is more easy or simple than to substitute cryolite for the fluorspar. Then the operation is much easier. The amount of metal produced is not much larger, although the button often weighs 22 grammes, yet if cryolite can only be obtained in abundance in a continuous supply, the process which I will describe will become most economical. The charge is made up as before, except introducing cryolite for fluorspar.

In one of our operations we obtained, with 76 grms. of sodium, a button weighing 22 grms. and 4 grms. in globules, giving a yield of one part aluminium to two and eight-tenths parts sodium, which is very near to that indicated by theory. The metal obtained was of excellent quality. However, it contained a little iron coming from the aluminium chloride, which had not been purified perfectly. But iron does not injure the properties of the metal as copper does; and, save a little bluish coloration, it does not alter its appearance or its resistance to physical and chemical agencies.

"After these attempts we tried performing the reduction simply on the bed of a reverberatory furnace, relying on the immediate reaction of sodium on the double chloride to use up these materials before they could be perceptibly wasted by the furnace gases. This condition was realized in practice with unlooked-for success. The reduction is now made on a somewhat considerable scale at the Nanterre works, and never, since commencing to operate in this way, has a reduction failed, the results obtained being always uniform. The furnace now used has all the relative dimensions of a soda furnace. In fact, almost the temperature of an ordinary soda furnace is required that the operation may succeed perfectly. The absolute dimensions of the furnace, however, may vary with the quantity of aluminium to be made in one operation, and are not limited. With a bed of one square metre surface, 6 to 10 kilos of aluminium can be reduced at once; and since each operation lasts about four hours, and the furnace may be recharged immediately after emptying it of the materials just treated, it is seen that, with so small a bed, 60 to 100 kilos of aluminium can be made in twenty-four hours without any difficulty. In this respect, I think the industrial problem perfectly solved. The proportions which we employed at first were—

Aluminium-sodium chloride (crushed)	10 parts.
Fluorspar	5 "
Sodium (in ingots)	2 "

"As aluminium is still very dear, it is necessary to direct

great attention to the return from the materials used, and on this point there is yet much progress to be made. We ascertained many times that the return was always a little better, and the reunion of the metal to a single ingot a little easier, when cryolite was substituted for fluorspar, the price of the former, after having been high, being now lowered to 350 francs per tonne (about $75 per long ton). For this reason we can now use cryolite instead of fluorspar, and in the same proportions. We can also recover alumina from this cryolite by treating the slags (see p. 148). The double chloride and pulverized cryolite are now mixed with the sodium in small ingots, and the mixture thrown on to the bed of the heated-up furnace. The dampers are then shut, to prevent as much as possible access of air. Very soon a lively reaction begins, with the production of such heat that the brick sides of the furnace, as well as the materials on the hearth, are made bright red-hot. At this heat the mixture is almost completely fused. Then it is necessary to open the damper and direct the flame on the bed in such manner as to heat the bath equally all over and unite the reduced aluminium. When the operation is considered ended, a casting is made by an opening in the back of the furnace and the slag is received in cast-iron pots. At the end of the cast the aluminium arrives in a single jet, which unites into a single lump at the bottom of the still-liquid slag. The gray slag flowing out last should be pulverized and sieved, to extract the divided globules of aluminium, 200 to 300 grammes of which can sometimes be extracted from one kilo of gray slag. The pulverization of the slag is in all cases indispensable in its subsequent treatment for extracting its alumina. The slag is of two kinds, one fluid and light, which covered the bath, and is rich in sodium chloride; the other less fusible and pasty, gray in color, which is more dense and lies in contact with the aluminium. The coloring material producing the grayness is carbon, coming either from the sodium or from the oil which impregnated it, or finally from the vapor of the oil. I attribute the slight pastiness of this slag to a little alumina dissolved by the fluorides. This slag contains about:

Sodium chloride	60 parts.
Aluminium fluoride	40 "

and on washing it the former dissolves while the latter remains, mixed with a little cryolite or alumina. This is the alumina which had been dissolved or retained in the bath of fluoride. It will be remarked that the bath of slag contains no other fluoride than aluminium fluoride, which does not attack earthen crucibles or siliceous materials in general except at a very high temperature. It is for this reason that the hearth and other parts of the furnace resist easily a fluoride slag containing only aluminium fluoride, which has not the property of combining with silicon fluoride at the expense of the silica of the bricks—as sodium fluoride does in like circumstances. In our operations, cryolite is used only as a flux. In the process of reduction based on cryolite alone, the sodium fluoride resulting is, on the contrary, very dangerous to crucibles, and it is due to that fact especially that the aluminium absorbs a large quantity of silicon, which always happens with this method. In fact, it is well known that metallic silicon can be prepared in this way by prolonging the operation a little."

Deville closes his account of the aluminium industry in 1859 with these words: "Many things yet remain to us to do, and we can scarcely say now that we know the true qualities of the substances we employ. But the matter is so new, is harassed with so many difficulties even after all that has been done, that our young enterprise may hope everything from the future when it shall have acquired experience. I ought to say, however, that the aluminium industry is now at such a point that if the uses of the metal are rapidly extended it may change its aspect with great rapidity. One may ask to-day how much a kilo of iron would cost if a works made only 60 to 100 kilos of it a month, if large apparatus were excluded from this industry, and iron obtained by laboratory processes which would permit it to become useful only by tedious after-treatment. Such will not be the case with aluminium, at least with the processes just described. In fact in all I undertook, either alone or with my

friends, I have always been guided by this thought—that we ought to adopt only such apparatus as is susceptible of being immediately enlarged, and to use only materials almost as common as clay itself for the source of the aluminium."

The Deville Process (1882).

The process just described reached a fair degree of perfection at Nanterre, under the direction of M. Paul Morin. Afterwards, some of the chemical operations incidental to the process were carried on at the works of the Chemical Manufacturing Company of Alais and Carmargue, at Salindres (Gard), owned by H. Merle & Co. At a later date the whole manufacture was removed to this place, while the Société Anonyme de l'Aluminium, at Nanterre, worked up the metal, and placed it on the market. The Salindres works, about 1880, went under the management of A. R. Pechiney & Co., and under the personal attention of M. Pechiney, the Deville process reached its perfection. The following account is taken mostly from M. Margottet's article on aluminium in Fremy's Encyclopédie Chimique.

An outline of the process, as it was prepared, may very appropriately be given at this place, although detailed descriptions of the preliminary processes for preparing the materials for reduction are given under the appropriate headings (see pp. 137, 154, 190).

The primary material to furnish the aluminium is bauxite. To obtain the metal it is necessary to proceed successively through the following operations:—

I. Preparation of the aluminate of soda, and solution of this salt to separate it from the ferric oxide contained in the bauxite.

II. Precipitation of hydrated alumina from the aluminate of soda by a current of carbon dioxide; washing the precipitate.

III. Preparation of a mixture of alumina, carbon, and salt, drying it, and then treating with gaseous chlorine to obtain the double chloride of aluminium and sodium.

IV. Lastly, treatment of this chloride by sodium to obtain aluminium.

The principal chemical reactions on which this process rests are the following:—

Formation of aluminate of soda by calcining bauxite with sodium carbonate—

$$(AlFe)_2O_3.2H_2O + 3Na_2CO_3 = Al_2O_3.3Na_2O + Fe_2O_3 + 2H_2O + 3CO_2.$$

Formation of alumina by precipitating the aluminate of soda with a current of carbon dioxide—

$$Al_2O_3.3Na_2O + 3CO_2 + 3H_2O = Al_2O_3.3H_2O + 3Na_2CO_3.$$

Formation of aluminium-sodium chloride by the action of chlorine on a mixture of alumina, carbon, and sodium chloride—

$$Al_2O_3 + 3C + 2NaCl + 6Cl = 2(AlCl_3.NaCl) + 3CO.$$

Reduction of this double chloride by sodium—

$$AlCl_3.NaCl + 3Na = Al + 4NaCl.$$

As observed before, we will here consider only the last operation. The advances made since 1859 are mostly in matters of detail, which every one knows are generally the most important part of a process; and so, although a few of the details may be repeated, yet we think it best not to break the continuity of this description by excising those few sentences which are nearly identical in the two accounts.

The difficulty of this operation, at least from an industrial point of view, is to get a slag fusible enough and light enough to let the reduced metal easily sink through it and unite. This result has been reached by using cryolite. This material forms with the sodium chloride resulting from the reaction a very fusible slag, in the midst of which the aluminium collects well, and falls to the bottom. In one operation the charge is now composed of—

100 kilos	.....	Aluminium-sodium chloride.
45 "	.....	Cryolite.
35 "	.....	Sodium.

The double chloride and cryolite are pulverized, the sodium, cut into small pieces a little larger than the thumb, is divided into three equal parts, each part being put into a sheet-iron basket. The mixture of double chloride and cryolite, being pulverized, is divided into four equal parts, three of these are respectively put in each basket with the sodium, the fourth being placed in a basket by itself. The reduction furnace (see

FIG. 25.

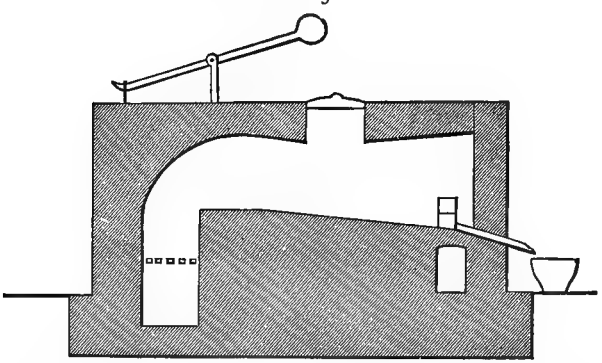

Fig. 25) is a little furnace of refractory brick, with an inclined hearth and a vaulted roof. This furnace is strongly braced by iron tie-rods. because of the concussions caused by the reaction. The flame may at any given moment be directed into a flue outside of the hearth. At the back part of the furnace, that is to say, on that side towards which the bed slopes, is a little brick wall which is built up for each reduction and is taken away in operating the running out of the metal and slag. A gutter of cast-iron is placed immediately in front of the wall to facilitate running out the materials. All this side of the furnace ought to be opened or closed at pleasure by means of a damper. Lastly, there is an opening for charging in the roof, closed by a lid. At the time of an operation the furnace should be heated to low redness, then are introduced in rapid

succession the contents of the three baskets containing sodium, etc., and lastly the fourth containing only double chloride and no sodium. Then all the openings of the furnace are closed, and a very vivid reaction accompanied by dull concussions immediately takes place. At the end of fifteen minutes, the action subsides, the dampers are opened and the heat continued, meanwhile stirring the mass from time to time with an iron poker. At the end of three hours the reduction is ended, and the metal collects at the bottom of the liquid bath. Then the running out is proceeded with in three phases: First—Running off the upper part of the bath, which consists of a fluid material completely free from reduced aluminium and constituting the white slag. To run this out a brick is taken away from the upper course of the little wall which terminates the hearth. These slags are received in an iron wagon. Second—Running out the aluminium. This is done by opening a small orifice left in the bottom of the brick wall, which was temporarily plugged up. The liquid metal is received in a cast-iron melting pot, the bottom of which has been previously heated to redness. The aluminium is immediately cast in a series of small rectangular cast-iron moulds. Third—Running out of the rest of the bath, which constitutes the gray slags. These were, like the white slags, formed by the sodium chloride and cryolite, but they contain, in addition, isolated globules of aluminium. To run these out, all the bricks of the little wall are taken away. This slag is received in the same melting pot into which the aluminium was run, the latter having been already moulded. Here it cools gradually, and after cooling there are always found at the bottom of the pot several grains of metal. In a good operation there are taken from one casting 10.5 kilos of aluminium, which is sold directly as commercial metal.

The following data as to the expense of this process may be very appropriately inserted here, giving the cost at Salindres in 1872, in which year 3600 kilos are said to have been made.

* Manufacture of one kilo of aluminium.

* A. Wurtz, Wagner's Jahresb., 1874, vol. xxi.

Sodium	3.44	kilos	@ 11.32	fr.	per kilo	=	38	fr.	90 cent.
Aluminium-sodium chloride. ...	10.04	"	2.48	"	"	=	24	"	90 "
Cryolite	3.87	"	61.0	"	100 kilos	=	2	"	36 "
Coal.....	29.17	"	1.40	"	"	=	0	"	41 "
					Wages.....		1	"	80 "
					Costs		0	"	88 "
					Total		69	"	25 "

This must be increased ten per cent. for losses and other expenses, making the cost of aluminium 80 fr. per kilo, and it is sold for 100. ($9.00 per lb.)

According to a statement in the 'Bull. de la Soc. de l'Industrie Minerale,' ii. 451, made in 1882, Salindres was then the only place in which aluminium was being manufactured. The Deville process was finally driven out of the market, and the manufacture at Salindres suspended, in 1890.

Niewerth's Process (1883).

This method can be regarded as little more than a suggestion, since it follows exactly the lines of some of Deville's earlier experiments. Although theoretically very advantageous, yet in practice it has probably been found far inferior in point of yield of metal and expense to the ordinary sodium processes. The patent is taken out in the United States and other countries in the name of H. Niewerth, of Hanover, and is thus summarized:

*A compound of aluminium, with chlorine or fluorine, is brought by any means into the form of vapor, and conducted, strongly heated, into contact with a mixture of 62 parts sodium carbonate, 28 coal, and 10 chalk, which is also in a highly heated condition. This mixture disengages sodium, which reduces the gaseous chloride or fluoride of aluminium, the nascent sodium being the reducing agent. In place of the above mixture other suitable mixtures which generate sodium may be employed, or mixtures may also advantageously be used from which potassium is generated.

* Sci. Am. Supple., Nov. 17, 1883.

Gadsden's Patent (1883).

H. A. Gadsden, of London, and E. Foote,* of New York, were granted a patent based on the principle of heating in a retort sodium carbonate and carbonaceous matter, or any suitable mixture for generating sodium, and conducting the vapor of sodium produced into another retort, lined with carbon, in which aluminium chloride, or aluminium-sodium chloride or cryolite, has been placed and heated. The second English patent claims to heat a mixture which will generate sodium in one retort, and pass chlorine over a mixture of carbon and alumina, thus generating aluminium chloride, in another retort, and then mixing the two vapors in a third retort or reaction chamber.

Frishmuth's Process (1884).

This was patented in the United States in 1884 (U. S. Pat. 308,152, Nov. 1884). In what the originality of the process consists, in view of Deville's publications and even in view of the processes just mentioned, we cannot see. Col. Frishmuth himself admitted, in 1887, having abandoned the sodium process, as the difficulties of the method did not permit its competing with the more roundabout but more easily-conducted operation with solid sodium. A simple transcript of the claims in his patent will give a sufficiently extended idea of the reactions proposed to be used.

1. The simultaneous generation of sodium vapor and a volatile compound of aluminium in two separate vessels or retorts, and mingling the vapors thus obtained in a nascent (!) state in a third vessel, wherein they react on each other.

2. The sodium vapor is produced from a mixture of a sodium compound and carbon, or some other reducing agent; and the aluminous vapor from aluminous material.

3. The simultaneous generation of sodium vapor and vapor of aluminium chloride or aluminium fluoride; or of sodium vapor and aluminium-sodium chloride.

* English patents 1995 and 4930 (1883); German patent 27,572 (1884).

4. Converting the aluminous material to a vapor by heating it in a retort with sodium chloride, and subjecting it at the same time to chlorine gas; mingling the vapor of aluminium-sodium chloride thus obtained with vapor simultaneously generated from sodium carbonate and carbon.

H. von Grousillier's Improvement (1885).

This suggestion as to the way of performing the reduction by sodium is the subject of the English patent 7858, June 29, 1885. Dr. Fischer remarks on it, in "Wagner's Jahresbericht" for 1885, that "it is apparently wholly worked out at the writing-table," The patentee, Hector von Grousillier, Springe, Hanover, thus describes his invention:

"In order to avoid the difficulties ordinarily met with in the use of aluminium-sodium chloride to obtain aluminium, I raise the volatilizing point of aluminium chloride by performing its reduction, either chemically or electrolytically, under pressure in a strong hermetically-closed vessel, lined with clay or magnesia, and provided with a safety valve."

The Deville-Castner Process (1886).

This last development of the old Deville process was operated by the Aluminium Company, Limited, at their large new works at Oldbury, near Birmingham, England. The plant covered nearly five acres of ground, and adjoined Chance Bros.' large chemical works, from which the hydrochloric acid used was obtained and the waste soda-liquors returned, by means of large pipes connecting the two plants. The company was thus in position to obtain acid and dispose of its by-products to very good advantage. The principle on which the process was worked is similar to its predecessor, in being the reduction of aluminium-sodium chloride by sodium, but it improves on the other in the cheaper production of both these materials. For instance, the alumina used is obtained and converted into double chloride by Mr. Webster's processes, by which the cost of this salt is not over 3*d.* per lb. (see p. 164), as against 12*d.*,

the cost at Salindres; further, by Mr. Castner's sodium process it is acknowledged that the sodium cost only about 9*d.* per lb., as against 48*d.*, or $1, as formerly. Since 10 lbs. of the chloride and 3 lbs. of sodium are required to produce 1 lb. of aluminium, the average saving in these two items, over the old process, is somewhere about 75 per cent.

The works contain a sodium building, in which are four large sodium furnaces, each capable of producing over 500 lbs. of that metal in twenty-four hours; the sodium is also remelted and stored in the same building (see p. 215). The double chloride furnaces are in a building 250 feet by 50 feet wide, there being 12 furnaces, each containing 5 retorts. The total output of double chloride is an average of 5000 lbs. per day. (See. p. 162). Connected with this building is a chlorine plant of the largest size, capable of supplying about a ton and a half of chlorine a day. In a separate building are two reverberatory furnaces, in which the final reduction takes place and the aluminium is produced. Besides these there are a rolling mill, wire mill, and foundry on the grounds. From the quantity of sodium and double chloride produced, we can see that the works can produce about 500 lbs. of aluminium a day, or 150,000 lbs. a year, with some sodium left over for sale or other purposes.

The mode of conducting the reduction is not very different from that practiced at Salindres. There are two regenerative reverberatory furnaces used, one about twice as large as the other. The larger furnace has a bed about six feet square, sloping towards the front of the furnace, through which are several openings at different heights. The charge for this furnace consists of 1200 lbs. of double chloride, 350 lbs. of sodium, and 600 lbs. of cryolite for a flux. The chloride is in small pieces, the cryolite is in powder, and the sodium is cut into thin slices by a machine. These ingredients are put into a revolving wooden drum placed on a staging over the furnace, and are there thoroughly mixed. The drum is then opened and turned, when the contents fall into a small wagon beneath.

The furnace having been raised to the required temperature, all the dampers are shut and the car is moved on a track immediately over a large hopper placed in the roof of the furnace. The hopper being opened, the charge is dumped in and drops on to the centre of the hearth. The reaction is immediate, and the whole charge becomes liquid in a very short time. After a few minutes, heating gas is again turned on, and the furnace kept moderately hot for two or three hours. The reaction has been

$$AlCl_3.NaCl + 3Na = Al + 4NaCl$$

and the aluminium gathers under the bath of cryolite and sodium chloride. One of the lower tap-holes is then opened with a bar, and the aluminium run out into moulds. When the metal has all run out it is followed by slag, which flows into iron wagons. The openings are then plugged up and the furnace is ready for another charge. The charge given produces usually 115 to 120 lbs. of aluminium, the whole operation lasting about 4 hours. The large furnace could thus produce 840 lbs. in 24 hours, and the smaller one half that quantity. The first portion of metal running out is the purest, the latter portions, and especially that entangled in the slag on the hearth, and which has to be scraped out, containing more foreign substances. This impure metal is about one-fourth of all the aluminium in the charge.

The purity of the metal run out depends directly on the purity of the chloride used. If the double chloride contains 0.2 per cent. of iron, the metal produced will very probably contain all of it, or 2 per cent. Using the double chloride purified by Mr. Castner's new method (see p. 163), by which the content of iron is reduced to 0.05 per cent. or less, aluminium can be made containing less than 0.5 per cent. of iron and from 99 to 99.5 per cent. of aluminium. Professor Roscoe exhibited at one of his lectures a mass of metal weighing 116 lbs., being one single running from the furnace, and which contained only 0.3 per cent. of silicon and 0.5 per cent. iron. In

practice, the metal from 8 or 10 runnings is melted down together to make a uniform quality.

Taking the figures given, it appears that the metal run out represents 70 per cent. of the aluminium in the charge, and 80 per cent. of the weight which the sodium put in should reduce; but since an indeterminate weight is sifted and picked from the slag, it is probable that the utilization of the materials is more perfect than the above percentages. However, this seems to be the part of the old Deville process least improved upon in these new works, for there seems to be plenty of room for improvement in perfecting the utilization of materials, especially in regard to loss of sodium by volatilization, which undoubtedly takes place and which can possibly be altogether prevented.

The above description, written in 1890, was followed only one year later by the closing of this splendid works. The very lowest point to which the Deville-Castner process could reduce the cost of producing aluminium was between 4 and 5 shillings per pound; and when the metal was put on the market by users of the electrolytic process at $1.50 per pound, in 1891, there was nothing left for the sodium process except to give up the business. The company, however, continues to run the works, making and selling large quantities of sodium.

CHAPTER X.

REDUCTION OF ALUMINIUM COMPOUNDS BY MEANS OF POTASSIUM OR SODIUM (*Continued*).

II.

METHODS based on the reduction of cryolite.

These can be most conveniently presented in chronological order.

Rose's Experiments (1855).

We will here give H. Rose's entire paper, as an account of this eminent chemist's investigations written out by himself with great detail, describing failures as well as successes, cannot but be of value to all interested in the production of aluminium:*

"Since the discovery of aluminium by Wöhler, Deville has recently devised the means of procuring the metal in large, solid masses, in which condition it exhibits properties with which we were previously unacquainted in its more pulverulent form as procured by Wöhler's method. While, for instance, in the latter state it burns vividly to white earthy alumina on being ignited, the fused globules may be heated to redness without perceptibly oxidizing. These differences may be ascribed to the greater amount of division on the one hand and of density on the other. According to Deville, however, Wöhler's metal contains platinum, by which he explains its difficulty of fusion, although it affords white alumina by combustion. Upon the publication of Deville's researches, I also tried to produce aluminium by the decomposition of aluminium-sodium chloride by means of sodium. I did not, however, obtain satisfactory

* Pogg. Annalen, Sept., 1855.

results. Moreover, Prof. Rammelsberg, who followed exactly the method of Deville, obtained but a very small product, and found it very difficult to prevent the cracking of the glass tube in which the experiment was conducted, by the action of the vapor of sodium on aluminium chloride. It appeared to me that a great amount of time, trouble and expense, as well as long practice, was necessary to obtain even small quantities of this remarkable metal.

"The employment of aluminium chloride and its compounds with alkali chlorides is particularly inconvenient, owing to their volatility, deliquescence, and to the necessity of preventing all access of air during their treatment with sodium. It very soon occurred to me that it would be better to use the fluoride of aluminium instead of the chloride; or rather the combination of the fluoride with alkaline fluorides, such as we know them through the investigations of Berzelius, who pointed out the strong affinity of aluminium fluoride for sodium fluoride and potassium fluoride, and that the mineral occurring in nature under the name of cryolite was a pure compound of aluminium fluoride and sodium fluoride.

"This compound is as well fitted for the preparation of aluminium by means of sodium as aluminium chloride or aluminium-sodium chloride. Moreover, as cryolite is not volatile, is readily reduced to the most minute state of division, is free from water and does not attract moisture from the air, it affords peculiar advantages over the above-mentioned compounds. In fact, I succeeded with much less trouble in preparing aluminium by exposing cryolite together with sodium to a strong red heat in an iron crucible, than by using aluminium chloride and its compounds. But the scarcity of cryolite prevented my pursuing the experiments. In consequence of receiving, however, from Prof. Krantz, of Bonn, a considerable quantity of the purest cryolite at a very moderate price ($2 per kilo), I was enabled to renew the investigation.

"I was particularly stimulated by finding, most unexpectedly, that cryolite was to be obtained here in Berlin commer-

cially at an inconceivably low price. Prof. Krantz had already informed me that cryolite occurred in commerce in bulk, but could not learn where. Shortly after, M. Rudel, the manager of the chemical works of H. Kunheim, gave me a sample of a coarse white powder, large quantities of which were brought from Greenland by way of Copenhagen to Stettin, under the name of mineral soda, and at the price of $3 per centner. Samples had been sent to the soap boilers, and a soda-lye had been extracted from it by means of quicklime, especially adapted to the preparation of many kinds of soap, probably from its containing alumina. It is a fact, that powdered cryolite is completely decomposed by quicklime and water. The fluoride of lime formed contains no alumina, which is all dissolved by the caustic soda solution; and this, on its side, is free from fluorine, or only contains a minute trace. I found this powder to be of equal purity to that received from Prof. Krantz. It dissolved without residue in hydrochloric acid (in platinum vessels); the solution evaporated to dryness with sulphuric acid, and heated till excess of acid was dissipated, gave a residue which dissolved completely in water, with the aid of a little hydrochloric acid. From this solution, ammonia precipitated a considerable quantity of alumina. The solution filtered from the precipitate furnished, on evaporation, a residue of sulphate of soda, free from potash. Moreover, the powder gave the well-known reactions of fluorine in a marked degree. This powder was cryolite of great purity: therefore the coarse powder I first obtained was not the form in which it was originally produced. It is now obtainable in Berlin in great masses; for the preparation of aluminium it must, however, be reduced to a very fine powder.

"In my experiments on the preparation of aluminium, which were performed in company with M. Weber, and with his most zealous assistance, I made use of small iron crucibles, 1¾ inches high and 1⅜ inches upper diameter, which I had cast here. In these I placed the finely divided cryolite between thin layers of sodium, pressed it down tight, covered it with a

good layer of potassium chloride (KCl), and closed the crucible with a well-fitting porcelain cover. I found potassium chloride the most advantageous flux to employ; it has the lowest specific gravity of any which could be used, an important point when the slight density of the metal is taken into consideration. It also increases the fusibility of the sodium fluoride. I usually employed equal weights of cryolite and potassium chloride, and for every five parts of cryolite two parts of sodium. The most fitting quantity for the crucible was found to be ten grammes of powdered cryolite. The whole was raised to a strong red heat by means of a gas-air blowpipe. It was found most advantageous to maintain the heat for about half an hour, and not longer, the crucible being kept closely covered the whole time; the contents were then found to be well fused. When quite cold the melted mass is removed from the crucible by means of a spatula; this is facilitated by striking the outside with a hammer. The crucible may be employed several times, at last it is broken by the hammer blows. The melted mass is treated with water, when at times only a very minute evolution of hydrogen gas is observed, which has the same unpleasant odor as the gas evolved during solution of iron in hydrochloric acid. The carbon contained in this gas is derived from a very slight trace of naphtha adhering to the sodium after drying it. On account of the difficult solubility of sodium fluoride, the mass is very slowly acted on by water, although the insolubility is somewhat diminished by the presence of the potassium chloride. After twelve hours the mass is softened so far that it may be removed from the liquid and broken down in a porcelain mortar. Large globules of aluminium are then discovered, weighing from 0.3 to 0.4 or even 0.5 grammes, which may be separated out. The smaller globules cannot well be separated from the undecomposed cryolite and the alumina always produced by washing, owing to their being specifically lighter than the latter. The whole is treated with nitric acid in the cold. The alumina is not dissolved thereby, but the little globules then first assume their true metallic lustre. They are dried and

rubbed on fine silk muslin; the finely powdered, undecomposed cryolite and alumina pass through, while the globules remain on the gauze. The mass should be treated in a platinum or silver vessel; a porcelain vessel would be powerfully acted on by the sodium fluoride. The solution, after standing till clear, may be evaporated to dryness in a platinum capsule, in order to obtain the sodium fluoride, mixed however with much potassium chloride. The small globules may be united by fusion in a small well-covered porcelain crucible, under a layer of potassium chloride. They cannot be united without a flux. They cannot be united by mere fusion, like globules of silver, for instance, for though they do not appear to oxidize on ignition in the air, yet they become coated with a scarcely perceptible film of oxide, which prevents their running together into a mass. This fusion with potassium chloride is always attended with a loss of aluminium. Buttons weighing 0.85 gramme lost, when so treated, 0.05 gramme. The potassium chloride when dissolved in water left a small quantity of alumina undissolved, but the solution contained none. Another portion of the metal had undoubtedly decomposed the potassium chloride; and a portion of this salt and aluminium chloride must have been volatilized during fusion (other metals, as copper and silver, behave in a similar manner—Pogg. lxviii. 287). I therefore followed the instructions of Deville, and melted the globules under a stratum of aluminium-sodium chloride in a covered porcelain crucible. The salt was melted first, and then the globules of metal added to the melted mass. There is no loss, or a very trifling one of a few milligrammes of metal, by this proceeding. When the aluminium is fused under potassium chloride its surface is not perfectly smooth, but exhibits minute concavities; with aluminium-sodium chloride this is not the case. The readiest method of preparing the double chloride for this purpose is by placing a mixture of alumina and carbon in a glass tube, as wide as possible, and inside this a tube of less diameter, open at both ends, and containing sodium chloride. If the spot where the mixture is

placed be very strongly heated, and that where the sodium chloride is situated, more moderately, while a current of chlorine is passed through the tube, the vapor of aluminium chlolide is so eagerly absorbed by the sodium chloride that none or at most a trace is deposited in any other part of the tube. If the smaller tube be weighed before the operation, the amount absorbed is readily determined. It is not uniformly combined with the sodium chloride, for that part which is nearest to the mixture of charcoal and alumina will be found to have absorbed the most.

"I have varied in many ways the process for the preparation of aluminium, but in the end have returned to the one just described. I often placed the sodium in the bottom of the crucible, the powdered cryolite above it, and the potassium chloride above all. On proceeding in this manner, it was observed that much sodium was volatilzed, burning with a strong yellow flame, which never occurred when it was cut into thin slices and placed in alternate layers with the cryolite, in which case the process goes on quietly. When the crucible begins to get red hot, the temperature suddenly rises, owing to the commencement of the decomposition of the compound; no lowering of the temperature should be allowed, but the heat should be steadily maintained, not longer, however, than half an hour. By prolonging the process a loss would be sustained, owing to the action of the potassium chloride on the aluminium. Nor does the size of the globules increase on extending the time even to two hours: this effect can only be produced by obtaining the highest possible temperature. If the process be stopped, however, after five or ten minutes of very strong heat, the production is very small, as the metal has not had sufficient time to conglomerate into globules, but is in a pulverulent form and burns to alumina during the cooling of the crucible. No advantage is gained by mixing the cryolite with a portion of chloride before placing it between the layers of sodium, neither did I increase the production by using aluminium sodium chloride to cover the mixture instead of potassium chloride. I

repeatedly employed decrepitated sodium chloride as a flux in the absence of potassium chloride, without remarking any important difference in the amount of metal produced, although a higher temperature is in this case required. The operations may also be conducted in refractory unglazed crucibles made of stoneware, and of the same dimensions, although they do not resist so well the action of the sodium fluoride at any high heats, but fuse in one or more places. The iron crucibles fuse, however, when exposed to a very high temperature in a charcoal fire. The product of metal was found to vary very much, even when operating exactly in the manner recommended, and with the same quantities of materials. I never succeeded in reducing the whole amount of metal contained in the cryolite (which contains 13 per cent. of aluminium). By operating on 10 grammes of cryolite, the quantity I always employed in the small iron crucible, the most successful result was 0.8 grm. But 0.6 or even 0.4 grm. may be considered favorable; many times I obtained only 0.3 grm., or even less. These very different results depend on various causes, more particularly, however, on the degree of heat obtained. The greater the heat, the greater the amount of large globules, and the less amount of minutely divided metal to oxidize during the cooling of the crucible. I succeeded once or twice in reducing nearly the whole of the metal to one single button weighing 0.5 grm., at a very high heat in a stoneware crucible. I could not always obtain the same heat with the blowpipe, as it depended in some degree on the pressure in the gasometer in the gas-works, which varies at different hours of the day. The following experiment will show how great the loss of metal may be owing to oxidation during the slow cooling of the crucible and its contents: In a large iron crucible were placed 35 grms. of cryolite in alternate layers with 14 grms. of sodium, and the whole covered with a thick stratum of potassium chloride. The crucible, covered by a porcelain cover, was placed in a larger earthen one also covered, and the whole exposed to a good heat in a draft furnace for one hour, and cooled as slowly as possible.

The product in this case was remarkably small, for 0.135 grm. of aluminium was all that could be obtained in globules. The differences in the amounts reduced depend also in some degree on the more or less successful stratification of the sodium with the powdered cryolite, as much of the latter sometimes escapes decomposition. The greater the amount of sodium employed, the less likely is this to be the case; however, owing to the great difference in their prices, I never employed more than 4 grms. of sodium to 10 grms. of cryolite. In order to avoid this loss by oxidation I tried another method of preparation: Twenty grms. of cryolite were heated intensely in a gun-barrel in a current of hydrogen, and then the vapor of 8 grms. of sodium passed over it. This was effected simply by placing the sodium in a little iron tray in a part of a gun-barrel without the fire, and pushing it forward when the cryolite had attained a maximum temperature. The operation went on very well, the whole being allowed to cool in a current of hydrogen. After the treatment with water, in which the sodium fluoride dissolved very slowly, I obtained a black powder consisting for the most part of iron. Its solution in hydrochloric acid gave small evidence of aluminium. The small amounts I obtained, however, should not deter others from making these experiments. These are the results of first experiments, on which I have not been able to expend much time. Now that cryolite can be procured at so moderate a price, and sodium by Deville's improvements will in future become so much cheaper, it is in the power of every chemist to engage in the preparation of aluminium, and I have no doubt that in a short time methods will be found affording a much more profitable result.

"To conclude, I am of opinion that cryolite is the best adapted of all the compounds of aluminium for the preparation of this metal. It deserves the preference over aluminium-sodium chloride or aluminium chloride, and it might still be employed with great advantage even if its price were to rise considerably. The attempts at preparing aluminium direct from alumina have as yet been unattended with success. Potassium and sodium

appear only to reduce metallic oxides when the potash and soda produced are capable of forming compounds with a portion of the oxide remaining as such. Pure potash and soda, with whose properties we are very slightly acquainted, do not appear to be formed in this case. Since, however, alumina combines so readily with the alkalies to form aluminates, one would be inclined to believe that the reduction of alumina by the alkali metals should succeed. But even were it possible to obtain the metal directly from alumina, it is very probable that cryolite would long be preferred should it remain at a moderate price, for it is furnished by nature in a rare state of purity, and the aluminium is combined in it with sodium and fluorine only, which exercise no prejudicial influence on the properties of the metal, whereas alumina is rarely found in nature in a pure state and in a dense, compact condition, and to prepare it on a large scale, freeing it from those substances which would act injuriously on the properties of the metal, would be attended with great difficulty.

"The buttons of aluminium which I have prepared are so malleable that they may be beaten and rolled out into the finest foil without cracking on the edges. They have a strong metallic lustre. Some small pieces, not globular, however, were found in the bottom of the crucible, and occasionally adhering to it, which cracked on being hammered, and were different in color and lustre from the others. They were evidently not so pure as the greater number of globules, and contained iron. On sawing through a large button weighing 3.8 grammes, it could readily be observed that the metal for about half a line from the exterior was brittle, while in the interior it was soft and malleable. Sometimes the interior of a globule contained cavities. With Deville, I have occasionally observed aluminium crystallized. A large button became striated and crystalline on cooling. Deville believes he has observed regular octahedra, but does not state this positively. According to my brother's examination, the crystals do not belong to any of the regular forms. As I chanced on one occasion to attempt

the fusion of a large, flattened out button of rather impure aluminium, without a flux, I observed, before the heat was sufficient to fuse the mass, small globules sweating out from the surface. The impure metal being less fusible than pure metal, the latter expands in fusing and comes to the surface."

Experiments of Percy and Dick (1855).

After the publication of Rose's results, widespread attention was directed toward this field, and it was discovered that some six months previously Dr. Percy, in England, had accomplished almost similar results, and had even shown a specimen of the metal to the Royal Institution, but with the singular fact of exciting very little attention. These facts are stated at length in the following paper written by Allan Dick, Esq., which appeared in November, 1855, two months after the publication of H. Rose's paper:—*

"In the last number of this magazine was the translation of a paper by H. Rose, of Berlin, describing a method of preparing aluminium from cryolite. Previously, at the suggestion of Dr. Percy, I had made some experiments on the same subject in the metallurgical laboratory of the School of Mines; and as the results obtained agree very closely with those of Mr. Rose, it may be interesting to give a short account of them now, though no detailed description was published at the time, a small piece of metal prepared from cryolite having simply been shown at the weekly meeting of the Royal Institution, March 30, 1855, accompanied by a few words of explanation by Faraday.

"Shortly after the publication of Mr. Deville's process for preparing aluminium from aluminium chloride, I tried along with Mr. Smith to make a specimen of the metal, but we found it much more difficult to do than Deville's paper had led us to anticipate, and had to remain contented with a much smaller piece of metal than we had hoped to obtain. It is, however, undoubtedly only a matter of time, skill, and expense to join

* Phil. Mag., Nov. 1855.

successful practice with the details given by Deville. Whilst making these experiments, Dr. Percy had often requested us to try whether cryolite could be used instead of the chlorides, but some time elapsed before we could obtain a specimen of the mineral. The first experiments were made in glass tubes sealed at one end, into which alternate layers of finely powdered cryolite and sodium cut into small pieces were introduced, and covered in some instances with a layer of cryolite, in others by sodium chloride. The tube was then heated over a gas blowpipe for a few minutes till decomposition had taken place, and the product was melted. When cold, on breaking the tube, it was found that the mass was full of small globules of aluminium, but owing to the specific gravity of the metal and flux being nearly alike, the globules had not collected into a button at the bottom. To effect this, long-continued heat would be required, which cannot be given in glass tubes owing to the powerful action of the melted fluoride on them. To obviate this difficulty, a platinum crucible was lined with magnesia by ramming it in hard and subsequently cutting out all but a lining. In this, alternate layers of cryolite and sodium were placed, with a thickish layer of cryolite on top. The crucible was covered with a tight-fitting lid, and heated to redness for about half an hour over a gas blowpipe. When cold it was placed in water, and after soaking for some time the contents were dug out, gently crushed in a mortar, and washed by decantation. Two or three globules of aluminium, tolerably large considering the size of the experiment, were obtained, along with a large number of very small ones. The larger ones were melted together under potassium chloride. Some experiments made in iron crucibles were not attended with the same success as those of Rose: no globules of any considerable size remained in the melted fluorides; the metal seemed to alloy on the sides of the crucible, which acquired a color like zinc. It is possible that this difference may have arisen from using a higher temperature than Rose, as we made these experiments in a furnace, not over the blowpipe. Porcelain and clay cru-

cibles were also tried, but laid aside after a few experiments, owing to the action of the fluorides upon them, which in most cases was sufficient to perforate them completely."

Deville's Methods (1856–8).

* "I have repeated and confirmed all the experiments of Dr. Percy and H. Rose, using the specimens of cryolite which I obtained from London through the kindness of MM. Rose and Hofmann. I have, furthermore, reduced cryolite mixed with sodium chloride by the battery, and I believe that this will be an excellent method of covering with aluminium all the other metals, copper in particular. Anyhow, its fusibility is considerably increased by mixing it with aluminium-sodium chloride. Cryolite is a double fluoride of aluminium and sodium, containing 13 per cent. of aluminium and having the formula $AlF_3.3NaF$. I have verified these facts myself by many analyses.

"In reducing the cryolite I placed the finely pulverized mixture of cryolite and sodium chloride in alternate layers with sodium in a porcelain crucible. The uppermost layer is of pure cryolite, covered with salt. The mixture is heated just to complete fusion, and after stirring with a pipe-stem, is let cool. On breaking the crucible, the aluminium is often found united in large globules, easy to separate from the mass. The metal always contains silicon, which increases the depth of its natural blue tint and hinders the whitening of metal by nitric acid, because of the insolubility of the silicon in that acid. M. Rose's metal is very ferruginous. I have verified all M. Rose's observations, and I agree with him concerning the return of metal, which I have always found very small. There are always produced in these operations brilliant flames, which are observed in the scoria floating on the aluminium, and which are due to the gas burning and exhaling a very marked odor of phosphorus. In fact, phosphoric acid exists in cryolite, as

* Ann. de Chim. et de Phys. [3], xlvi. 451.

one may find by treating a solution of the mineral in sulphuric acid with molybdate of ammonia, according to H. Rose's reaction.

"M. Rose has recommended iron vessels for this operation, because of the rapidity with which alkaline fluorides attack earthen crucibles and so introduce considerable silicon into the metal. Unfortunately, these iron crucibles introduce iron into the metal. This is an evil inherent in this method, at least in the present state of the industry. The inconveniences of this method result in part from the high temperature required to complete the operation, and from the crucible being in direct contact with the fire, by which its sides are heated hotter than the metal in the crucible. The metal itself, placed in the lower part of the fire, is hotter than the slag. This, according to my observations, is an essentially injurious condition. The slag ought to be cool, the metal still less heated, and the sides of the vessel where the fusion occurs ought to be as cold as possible. The yield from cryolite, according to Rose's and my own observations, is also very small. M. Rose obtained from 10 of cryolite and 4 of sodium about 0.5 of aluminium. This is due to the affinity of fluorine for aluminium, which must be very strong not only with relation to its affinity for sodium, but even for calcium, and this affinity appears to increase with the temperature, as was found in my laboratory. Cryolite is most convenient to employ as a flux to add to the mixture which is fused, especially when operating on a small scale.

"The argument which decided the company at Nanterre not to adopt the method of manufacture exclusively from cryolite was the report of M. de Chancourtois, mining engineer, who had just returned from a voyage to Greenland. According to the verbal statements of this gentleman, the gîte at Evigtok is accessible only during a very short interval of time each year, and, because of the ice fields, can only be reached then by a steamboat. The workmen sent from Europe to blast and load up the rock have scarcely one or two months of work possible. The local workmen remain almost a whole year deprived of all

communication with the rest of the world, without fresh provisions or fuel other than that brought from Europe in the short interval that navigation is open. The deposit itself, which is scarcely above sea-level, can be easily worked with open roof, but the neighborhood of the sea in direct contact with the vein, the unorganized manner of working, and the lack of care in keeping separate the metalliferous portions of the ore—all combine to render the mineral very costly, and further developments underground almost impossible.

"It is therefore fortunate that cryolite is not indispensable, for no one would wish to establish an industry based on the employment of a material which is of such uncertain supply."

Tissier Bros.' Method (1857).

The process adopted in the works at Amfreville, near Rouen, directed by Tissier Bros., is essentially that described by Percy and Rose. The method of operating is given by the Tissier Bros. themselves in their book as follows:

"After having finely powdered the cryolite, it is mixed with a certain quantity of sodium chloride (sea salt), then placed betweeen layers of sodium used in the proportions given by M. Rose, in large refractory crucibles. These are heated either in a reverberatory furnace or in a wind furnace capable of giving a temperature high enough to melt the fluoride of sodium produced by the reaction. As the sodium fluoride requires a pretty high temperature to fuse it, the heat will necessarily be higher than that required in the reduction of the double chloride of aluminium and sodium. When the contents of the crucible are melted, so as to be quite liquid, the fusion is poured into cast-iron pots, at the bottom of which the aluminium collects in one or several lumps."

Tissier Bros. claimed the following advantages for the use of cryolite:

"Cryolite comes to us of a purity difficult to obtain with the double chloride of aluminium and sodium, to which it exactly corresponds; and since, thanks to the perfection we have at-

tained in using it, the return of aluminium is exactly correspondent to the amount of sodium used in reduction, it is easily seen what immense advantages result from its employment. The double chloride deteriorates in the air, it gives rise in the works to vapors more or less deleterious and corrosive, and its price is always high. Cryolite can be imported into France at a price so low that we have utilized it economically for making commercial carbonate of soda; it remains unaltered in the air, emits no deleterious vapors, and its management is much more easy than that of the double chloride. Moreover, on comparing the residues of the two methods of reduction, the manufacture from double chloride leaves sodium chloride, almost without value, while the manufacture from cryolite leaves sodium fluoride, which may be converted for almost nothing into caustic soda or carbonate, and so completely cancels the cost of the cryolite from the cost of aluminium. The most serious objection which can be made to using cryolite is that the sources of the mineral being up to the present very limited, the future prospect of aluminium lies necessarily in the utilization of clays and their transformation into aluminium chloride; but, admitting that other sources of cryolite may not be discovered hereafter, the abundance of those which exist in Greenland will for a long time to come give this mineral the preference in the manufacture of aluminium."

The most serious difficulty which this process had to meet, and which it could not overcome, was the high content of silicon in the metal produced. A specimen of their aluminium made in 1859 contained 4.4 per cent. of silicon alone (see p. 54, Analysis 7). The firm at Rouen went out of business about 1863 or 1865—I am unable to give the exact date. From that time until quite recently, it has been considered that the best use of cryolite is as a flux in the preparation of aluminium from aluminium-sodium chloride, in which case the slag is not sodium fluoride, but aluminium fluoride, which acts but slightly on the containing vessel.

Wöhler's Modifications (1856).

Wöhler suggested the following modifications of Deville's process of reducing cryolite in crucibles, by means of which the reduction can be performed in an earthen crucible without the metal produced taking up silicon.

* "The finely pulverized cryolite is mixed with an equal weight of a flux containing 7 parts sodium chloride to 9 parts potassium chloride. This mixture is then placed in alternate layers with sodium in the crucible, 50 parts of the mixture to 10 of sodium, and heated gradually just to its fusing point. The metal thus obtained is free from silicon, but only one-third of the aluminium in the cryolite is obtained." In spite of the small yield, this method was used for some time by Tissier Bros.

Gerhard's Furnace (1858).

This furnace was devised for the reduction of aluminium either from aluminium-sodium chloride or from cryolite, the object being to prevent loss of sodium by ignition. It was invented and patented by W. F. Gerhard.† "It consists of a reverberatory furnace having two hearths, or of two crucibles, or of two reverberatory furnaces, placed one above the other and communicating by an iron pipe. In the lower is placed a mixture of sodium with the aluminium compound, and in the upper a stratum of sodium chloride, or of a mixture of this salt and cryolite, or of the slag obtained in a previous operation. This charge, when melted, is made to run into the lower furnace in quantity sufficient to completely cover the mixture contained therein, and so to protect it from the air. The mixture thus covered is reduced as by the usual operation."

Whether a furnace was ever put up and operated on this principle, the author cannot say. It is possible that it may have been used in the English manufactory started in 1859 at Battersea near London. (See p. 18.)

* Ann. der Chem. und Pharm. 99,255.

† Eng. Pat., 1858, No. 2247.

Thompson and White's Patent (1887).

* J. B. Thompson and W. White recommend heating a mixture of 3 parts sodium and 4 parts cryolite to 100°, whereby the sodium becomes pasty and the whole can be well kneaded together with an iron spatula. When cold, 4 parts of aluminium chloride are added, and the mixture put into a hopper on top of a well-heated reverberatory furnace, with a cup-shaped hearth. The charge is dropped into the furnace and the reaction takes place at once. To produce alloys, this patent claims 16 parts of cryolite are mixed with 5 parts of sodium, the metal added before reduction and the mixture treated as above, by which means explosions are avoided. The preliminary heating to 100° is effected in a jacketed cast-iron pot connected with a circulating boiler.

Hampe's Experiment (1888).

† Dr. W. Hampe failed to produce aluminium bronze by treating cryolite with sodium in the presence of copper. A mixture of

Finely divided copper	44	grammes,
Sodium, in small pieces,	15	"
Finely powdered cryolite	100	"

was melted rapidly in a carbon-lined crucible. There were no sounds given out such as usually accompany other reductions by sodium, but much sodium vapor was given off. The copper button contained only traces of aluminium.

Netto's Process (1887).

Dr. Curt Netto, of Dresden, patented in England and Germany, in spring and autumn of 1887, processes for producing sodium and potassium and methods of using them in producing aluminium. His experiments were made in conjunction with Dr. Salomon, of Essen, and the fact that the experimental ap-

* English patent 8427, June 11, 1887.

† Chemiker Zeitung, (Cöthen), xii, p. 391.

paratus was put up in Krupp's large steel works at Essen gave rise to reports that the latter had taken up the manufacture of aluminium by some new and very successful process, intending to use it for alloys in making cannon. *

In the latter part of 1888 was formed the Alliance Aluminium Co. of London, England, capitalized at £500,000, purposing to manufacture sodium and aluminium, and owning the English, French, German, and Belgian patents of Dr. Netto for the production of those metals, also the processes of a Mr. Cunningham for the same purpose, also a process for the production of artificial cryolite by the regeneration of slag (provisionally protected by its inventor, Mr. Forster, of the Lonesome Chemical Works, Streatham), and, lastly, a process invented by Drs. Netto and Salomon by which aluminium can be raised to the highest standards of purity on a commercial scale. A note accompanying the above announcement stated that the exhaustive experiments made at Essen had satisfactorily demonstrated the practicability of the processes, and that the company had already contracted with the cryolite mines of Greenland for all the cryolite they would need.

In June, 1888,† the Alliance Aluminium Company had in operation a small aluminium plant at King's Head Yard, London, E. C., and when the process was in continuous operation the cost of the metal was set down at 6 shillings per pound. It is probable that the metal exhibited in the Paris Exposition of 1889 was produced at this place.

In April, 1889,‡ ten acres of ground had been leased at Hepburn on which to produce sodium by Capt. Cunningham's process. The sodium produced was to be sent to Wallsend to be used by the Alliance Aluminium Company, who were erecting a large works at that place.

As for Capt. Cunningham's sodium processes, they are apparently identical with Dr. Netto's. Cunningham's aluminium

* American Register, Paris, August, 1888.

† Engineering, June 1, 1888.

‡ E. and M. J., April 27, 1889.

process* consists in melting the sodium to be used with lead, in order to facilitate the submerging of the sodium under the molten aluminium salt. The alloy is cast into bars and added piece by piece to the bath of molten aluminium salt on the hearth of a reverberatory furnace. After the reaction the mixture separates by specific gravity into lead, containing a little aluminium, and aluminium containing a little lead, the slag floating on top of all. Aluminium is known to have so small an attraction for lead that this result becomes possible.

FIG. 26.

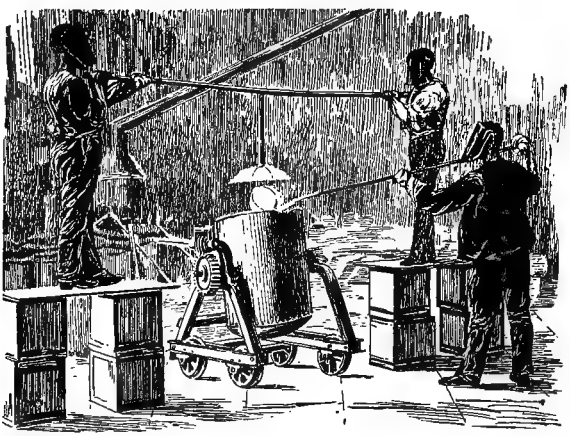

Dr. Netto recommends several processes, the one used at London being the following:—†

One hundred parts of cryolite and 30 to 100 parts of sintered sodium chloride are melted at a red heat in a well-covered clay crucible. (Another arrangement, and apparently a better, is to melt this mixture on the hearth of a reverberatory furnace and tap it into a deep, conical ladle, in which the succeeding operations proceed as about to be described. See Fig. 26.) As soon as the bath is well fused, 35 parts of sodium at the end of a rod, and

* English Patent, 16727, Dec. 5, 1887.

† German Patent (D. R. P.), 45198, March 26, 1887.

covered over by a perforated concave plate is pushed quickly down to the bottom of the crucible. The plate mentioned fits across the whole section of the crucible at its lower part, so that the fusible, easily volatile sodium, being vaporized, is divided into very fine streams as it passes upwards through the bath, and is all utilized before it reaches the surface. In this way the reaction is almost instantaneous, and the contents can be poured out at once into iron pots, where, on cooling, the metal is found as a large lump at the bottom.

It is further observed that to avoid explosions on introducing the sodium it should have in it no cavities which might contain moisture or hydrocarbons. In consequence of the reaction being over so quickly, and the heat set free in the reduction, the syrupy fusion becomes thin as water, and the aluminium disseminated through the mass collects together completely, so that the slag contains no particles visible to the eye. Since the reduction, pouring, and cooling take place so quickly, the aluminium is not noticeably redissolved by the bath, thus insuring a high return of metal. By using 35 parts of sodium to 100 parts of cryolite, 10 parts of aluminium are obtained. Since the cryolite contains 13 per cent. of aluminium, the return is 77 per cent. of the amount of metal in the cryolite; since 35 parts of sodium should theoretically displace 14 parts of aluminium, the return is 71 per cent. of the amount which the sodium should produce. Dr. Netto claims that this is double the return formerly obtained from cryolite. The metal produced is said to be from 98.5 to 99 per cent. pure.

The apparatus erected at Krupp's works at Essen, which was described by the newspapers as similar to a Bessemer converter, was constructed and operated as follows: A large iron cylinder is pivoted at the centre in a manner similar to a Bessemer converter. Passing through the centre of the cylinder, longitudinally, is a large iron tube in which generator gas is burnt to heat the vessel. To heat it up, it is placed erect, connection made with the gas-main, while a hood above connects with the chimney. On top of the cylinder, a close valve communicates

with the interior, for charging, and at the other end is a tap-hole. The charge of cryolite being put in, the flame is passed through the central tube until the mineral is well fused. Then solid or melted sodium is passed in at the top, the valve is screwed tight, the gas shut off, and the whole cylinder is rotated several times until reduction is complete, when it is brought upright, the tap-hole opened and slag and metal tapped into a deep iron pot, where they separate and cool. Aluminium thus made could not but contain much iron, even up to 14 per cent., it is said, which would prevent its use for any purpose except alloying with iron. To procure pure aluminium, the vessel would have to be properly fettled.

Dr. Netto also devised an arrangement similar to Heaton's apparatus for making steel. It consisted of a large, well-lined vessel on trunnions, the bottom of which was filled to a certain depth with sodium, then a perforated aluminium plate placed like a false bottom over it. On pouring molten cryolite into the vessel, the aluminium plate prevented the sodium from rising *en masse* to the surface of the cryolite. After the reaction was over, the vessel was tilted and the slag and metal poured out into iron pots.

The modification of the crucible method appears to have been the most feasible of Netto's processes, and was probably that used at Wallsend by the Alliance Aluminium Company. Outside estimates of the cost of aluminium to this company placed it at $1.50 to $2 per pound. They were selling in the latter part of 1889 at 11, 13, and 15 shillings per pound, according to quality, but were forced out of the business by the electrolytic processes in 1891.

Grabau's Process (1887).

There is only one patentee claiming particularly the reduction of aluminium fluoride by sodium—Ludwig Grabau, of Hannover, Germany. His patents on this subject are immediately preceded by others on a method of producing the aluminium fluoride cheaply, which are described on p. 171, and

the inventor has patented a process which will furnish him with cheap sodium. Mr. Alexander Siemens is authority for the statement that a plant was in operation in the spring of 1889, in Hannover, producing aluminium by this process on a commercial scale. The principal object of Mr. Grabau's endeavors has been to produce metal of a very high degree of purity. To this end every precaution is taken to procure pure materials and to prevent contamination during reduction. We will quote from a paper written by Mr. Grabau* and also from his specifications,† the following explanation of the process:

"The purifying of impure aluminium is accompanied by so many difficulties that it appears almost impossible. It is therefore of the greatest importance to so conduct the operation that every impurity is excluded from the start. Molten aluminium compounds, whether a flux is added or not, attack any kind of refractory vessels and become siliceous if these vessels are made of chamotte or like materials, or if made of iron they become ferruginous. These impurities are reduced in the further processes and pass immediately into the aluminium as iron, silicon, etc. Evidently the case is altered if an aluminium compound which is infusible can be used advantageously. Aluminium fluoride is infusible and also retains its pulverized condition when heated up to the temperature needed for its use; it can therefore be heated in a vessel of any kind of refractory material, or even in a metallic retort, without danger of taking up any impurity.

"Further, it is necessary for succeeding in producing aluminium that the reduced metal thall unite to a large body after the reduction. For this purpose all previous processes use fluxes, and usually cryolite. But cryolite is impure, and therefore here is a source of many of the impurities in commercial aluminium. Dr. K. Kraut, of Hannover, has observed that, according to the recent analyses of Fresenius and Hintz, com-

* Zeitschrift für angewandte, Chemie, 1889, vol. 6.

† German Pat. (D. R. P.) 47031, Nov. 15, 1887. English Pat. 15593, Nov. 14, 1887. U. S. Patents 386704, July 24, 1888; and 400449, April 2, 1889.

mercial cryolite contains 0.80 to 1.39 per cent. of silicon, and 0.11 to 0.88 per cent. of iron, and that these impurities interpenetrate the mineral in such a manner as to be often only visible under the microscope, and therefore totally impossible of removal by mechanical means. It is thus seen that the avoidance of the use of any flux is of great importance as far as producing pure metal is concerned, as well as from an economic standpoint.

"By the following process it is also possible to reduce aluminium fluoride by sodium without the vessel in which reduction takes place being attacked either by the aluminium-sodium fluoride formed or by the reduced aluminium. For this purpose the aluminium fluoride and sodium are brought together in such proportions that after the reaction there is still sufficient aluminium fluoride present to form with the sodium fluoride resulting from the reaction a compound having the composition of cryolite. The reaction, therefore, will be

$$2AlF_3+3Na=Al+AlF_3.3NaF.$$

"Using these proportions, the aluminium fluoride must be previously warmed up to about 600° C., in order that when it is showered down upon the melted sodium the reaction may commence without further application of heat. The aluminium fluoride remains granular at this temperature and therefore remains on top of the melted sodium, like saw-dust or meal upon water, and under its protection the reaction proceeds from below upwards—an important advantage over the usual method of pouring molten aluminium compounds on to sodium, in which the lighter sodium floats to the top and burns to waste. If solid sodium is used in my process the aluminium fluoride must be somewhat hotter on being poured into the reduction vessel, or about 700° C. For carrying out the process the reduction vessel must be artificially cooled, so as to form a lining by chilling some of the aluminium-sodium fluoride formed by the reaction, on the inner walls. This lining is in no wise further attacked by the contents of the vessel, nor can it evidently supply to them any impurity.

FIG. 27.

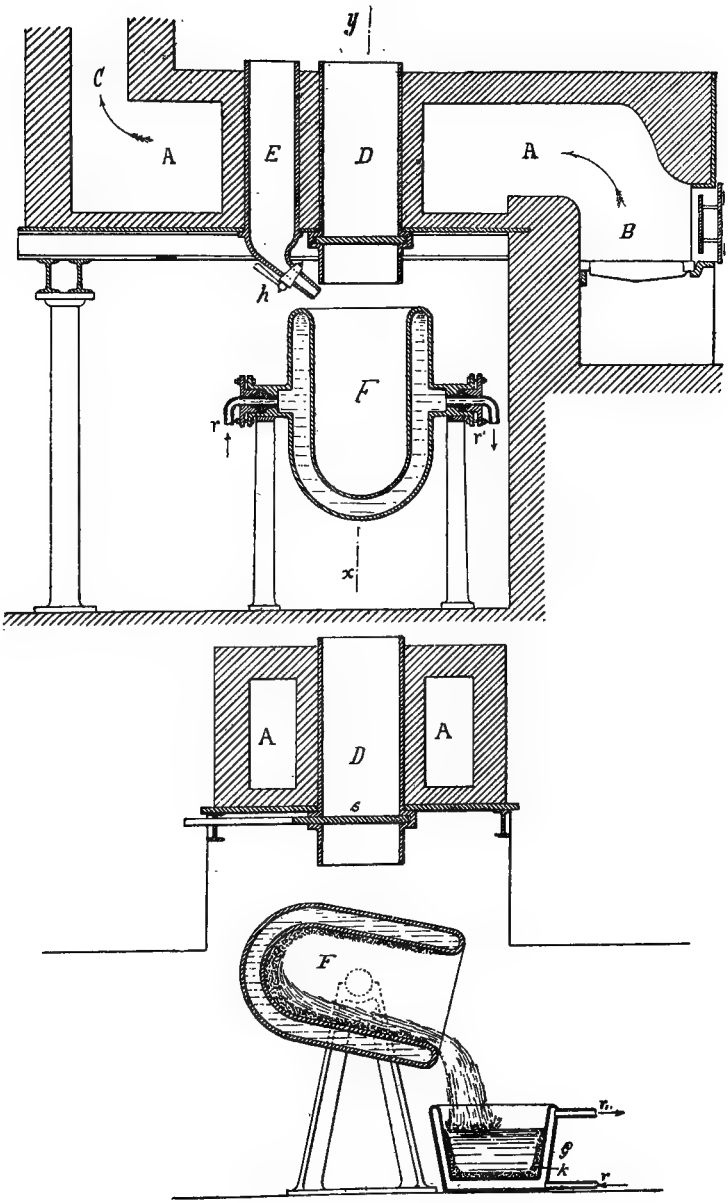

"The furnace *A* (Fig. 27) with grate *B* and chimney *C*, serves for heating the iron retorts *D* and *E*, which are coated with chamotte and protected from the direct action of the flame by brick work. The vessel *D* serves for heating the aluminium fluoride, and is provided with a damper or sliding valve beneath. The sodium is melted in *E*, and can be emptied out by turning the cock *h*. The water-jacketed reduction vessel is mounted on trunnions to facilitate emptying it. The retorts are first heated dark red-hot, and *D* is filled with the convenient quantity of aluminium fluoride. When this has become red hot, as is shown by a small quantity of white vapor issuing from it, the required quantity of sodium is put into *E*. This melts very quickly, and is then immediately run into the reduction vessel by opening the stop-cock *h*. As soon as it is transferred, the slide at the base of the retort *D* is pulled out and the whole quantitity of aluminium fluoride falls at once upon the sodium, and the reaction begins. As before remarked, the granular form of the aluminium fluoride keeps it on top of the sodium, so that the latter is completely covered during the whole reaction. This prevents almost altogether any waste of sodium by volatilization. Dr. K. Kraut testifies to an operation which he witnessed in which the return showed 83 per cent. of the sodium to have been utilized. An efficiency in this respect of over 90 per cent. has been occasionally reached, while the average is 80 to 90. Ad. Wurtz states that the average for several years' working of the Deville process showed only 74.3 per cent. of the quantity of aluminium produced which the sodium used could have given.

"During the reaction a very high temperature is developed, so that the cryolite formed becomes very fluid, but is chilled against the sides of the vessel to a thickness of a centimetre or more. This crust is a poor conductor of heat, and is neither attacked by the fluid cryolite nor by the aluminium. In consequence of the great fluidity of the bath, it is possible for the aluminium to unite into a body without the use of any flux, The reaction being over, which is accomplished with the above

proportions of materials in a few seconds, and the vessel having been shaken briskly backwards and forwards a few times to facilitate the settling of the aluminium, the whole is turned on the trunnions and emptied into a water-jacketed iron pot, where it cools. The crust of cryolite inside the reduction vessel is left there, and the apparatus is ready for another operation."

M. Grabau, in a private communication to the author, sums up the advantages of his process, including the production of the aluminium fluoride, as follows:—

1. The process is not dependent on natural cryolite, which is expensive, impure and not easily purified.

2. The raw material—aluminium sulphate—can be procured in large quantities and of perfect purity.

3. The aluminium fluoride is produced by a wet process, which offers no difficulties to production on a large scale.

4. The fluorspar may be completely freed from foreign metals by washing with dilute acid; any silica present is not injurious, as it remains undissolved in the residue during the reactions.

5. The cryolite formed in each reduction contains no impurities, and an excess of it is produced which can be sold.

6. The reduction of aluminium fluoride by my method gives a utilization of 80 to 90 per cent. of the sodium used, which is much more than can be obtained by other processes.

7. Aluminium fluoride is infusible, and can therefore be heated in a vessel of any refractory material without taking up any impurities. It is also unchanged in the air, and can be kept unsealed for any length of time without deteriorating in the least.

8. No flux has to be added for reduction, the use of impure flux being a frequent cause of impurity of the metal.

In point of fact, M. Grabau has succeeded in producing several hundred pounds of aluminium averaging over 99½ per cent. pure. Dr. Kraut reports an analysis of an average specimen with 99.62 per cent. of aluminium (see Analysis 20, p. 54), and metal has been made as pure as 99.8 per cent., a piece of

which has been kindly forwarded the author by M. Grabau, and I freely admit it to be as fine a specimen of aluminium as I have ever seen. Metal of such purity and fineness can only be made by the electrolytic processes at considerable expense over ordinary best commercial metal, since they must use chemically pure alumina and extra precautions as to the purity of the electrodes. It therefore appears possible that M. Grabau may yet be able to manufacture and sell this extra quality aluminium, if he can bring its price anywhere near that of the electrolytic aluminium. The Grabau Aluminium Werke, Trotha, Germany, operates the Grabau processes, and does a business in manufacturing and selling sodium.

CHAPTER XI.

REDUCTION OF ALUMINIUM COMPOUNDS BY THE USE OF ELECTRICITY.

As preliminary to the presentation of the various electrolytic methods which have been proposed or used, it may be profitable to review briefly the principles of electro-metallurgy as they apply to the decomposition of aluminium compounds. Some additional observations have been already included in Chapter VIII.

The atomic weight of aluminium being 27, its chemical equivalent, or the weight of it equal in combining power to one part of hydrogen, is 9. Therefore a current of quantity sufficient to liberate 1 part of hydrogen in a certain time would produce 9 parts of aluminium in the same time, according to the fundamental law of electric decomposition. It has been determined that a current of 1 ampere acting for one second, liberates 0.00001035 grammes of hydrogen; therefore it will produce or set free from combination in the same time, 0.00009315 grammes of aluminium. This is the electro-chemical equivalent of aluminium. Now, from thermo-chemical data we know that the amount of energy required to set free a certain weight of aluminium will vary with the compound from which it is produced; but the above equivalent is independent of the compound decomposed, therefore there must be some varying factor connected with the quantity of the current to account for the different amounts of work which the current does in decomposing different compounds of the same element. This is exactly in accordance with the principles of the mechanical or thermal equivalent of the electric current, for the statement "a current of one ampere," while it expresses a definite quan-

tity of electricity, yet carries no idea of the energy represented by that current; we must know against what resistance or with what electro-motive force that quantity is moved, and then we can calculate its mechanical equivalent. Now, a current of 1 ampere flowing against a resistance of 1 ohm, or in other words, with a moving force or intensity of 1 volt, represents a quantity of energy in one second equal to 0.00024 calories of heat or to 0.1 kilogrammetre of work, and is therefore nearly $\frac{1}{750}$ of a horse power. Therefore we can calculate the theoretical intensity of current necessary to overcome the affinities of any aluminium compound for which we know the appropriate thermal data. For instance, when aluminium forms its chloride (see p. 228) $\frac{321,960}{54} = 5,960$ calories are developed per kilo of aluminium combining; consequently the liberating of 0.00009315 grammes of aluminium (its electro-chemical equivalent), requires the expenditure of an amount of energy equal to $0.00009315 \times 5.960 = 0.000555$ calories. Since a current of 1 ampere at an intensity of 1 volt represents only 0.00024 calories, the intensity of current necessary to decompose aluminium chloride is theoretically $\frac{0.000555}{0.00024} = 2.3$ volts. In a similar manner we can calculate that to decompose alumina would require an electro-motive force of $\frac{391600}{54} \times \frac{0.00000009315}{0.00024} =$ 2.8 volts. These data would apply only to the substances named, in a fused anhydrous state; with hydrated aluminium chloride in solution, a far greater electro-motive force would be necessary. If we had the thermal data we could also calculate the intensity of current necessary to decompose the sulphate, nitrate, acetate, etc., in aqueous solution; but failing these, we can reason from analogy that it would be several volts in each case.

It must be noted also, that these heats of combination are those observed at ordinary temperatures. To find the voltage required at high temperatures we must make allowance for the

weakening of the affinities, that is, for the decrease in heat of combination as the temperature rises. When the rate of this decrease is known, the true voltage required at any temperature can be calculated. Often the operation is reversed; that is, the minimum electro-motive force required to effect decomposition is accurately measured at different temperatures, and from these data the variation in the heat of formation with the temperature can be calculated by reversing the above calculations. For example of this see p. 239.

To utilize such calculations, we must bear in mind exactly what they represent. To decompose fused aluminium chloride, for instance, not only must the current possess an intensity of 2.3 volts, but it must in addition have power enough above this to overcome the transfer resistance of the electrolyte; *i. e.*, to force the current through the bath from one pole to the other. So, then, 2.3 volts would be the absolute minimum of intensity which would produce decomposition, and the actual intensity practically required would be greater than this, varying with the distance of the poles apart and the temperature of the bath as far as it affects the conducting power of the electrolyte. From this it would immediately follow that if the substance to be decomposed is an absolute non-conductor of electricity, no intensity of current will be able to decompose it. If, on the other hand, the substance is a conductor and the poles are within reasonable distance, a current of a certain intensity will always produce decomposition. The objection is immediately made that in most cases no metal is obtained at all, which is true not because none is produced, but because it is often dissolved by secondary actions as quickly as it is produced. I need but refer to the historic explanation of the decomposition of caustic soda in aqueous solution, although we have cases hardly parallel to this in which the electrolyte itself dissolves the separated metal.

How about the case of aqueous solutions? Water requires a minimum electro-motive force of 1.5 volts to decompose it, and hence a prominent electrician remarked of a compound

which theoretically required over 2 volts that its decomposition in aqueous solution would involve the decomposition of the water and therefore was impossible. This remark is only partly true; for caustic soda requres over 2 volts, yet if mercury is present to absorb the sodium as it is set free and protect it from the water, we will obtain sodium, while the water is decomposed at the same time. The truth seems to be that if two substances are present which require different electro-motive forces to decompose them, a current of a certain intensity will decompose the one requiring the least force, without affecting the other at all; but, if it is of an intensity sufficient to decompose the higher compound, then the current will be divided in some ratio between the two, decomposing them both. This theory would render theoretically possible the decomposition of aluminium salts in aqueous solution, with a waste of power proportional to the amount of water decomposed at the same time; but whether any aluminium would be obtained would be contingent on the secondary action of the water on the aluminium. Pure aluminium in mass is not acted upon by water, but the foil is rapidly eaten away by boiling water. The state of division of the metal, then, determines the action of water on it, and it is altogether probable that the reason why aluminium is not easily deposited from aqueous solution is that, like sodium, it is attacked as soon as isolated, the acidity of the solution converting the hydrate formed back into the salt, or else simply the hydrate remaining. Unfortunately, mercury does not exercise the same function with aluminium as with sodium, for water attacks its amalgam with aluminium, and so destroys the metal. It is possible that if some analogous solvent could be found which protected the aluminium from the action of water, the deposition from aqueous solution could be performed quite easily.

The electro-deposition of a metal using a soluble anode is entirely a different affair. In this case, while the salt in solution is decomposed, yet it is immediately regenerated by the acid radical set free dissolving from the anode just the same quantity of metal as was deposited at the cathode. This action

exactly counterbalances the electromotive force required for decomposition, and leaves only the conduction resistance of the bath to be overcome. If this resistance is kept down so that the tension required to operate the bath is less than or not much greater than 1.5 volts, and the bath is well supplied with salt, there will be no water decomposed and a good plating may be obtained. This has been already practised on a large scale with aluminium.

With anodes, however, which do not dissolve, the decomposition of the salt necessarily involves that of the water, if over 1.5 volts are required to decompose it. The result of this is that hydrogen gas is set free liberally at the cathode along with the metal, and prevents the latter from depositing as a smooth, dense metal, causing, in fact, the production of "sponge." This finely-divided spongy metal is in the very best condition to decompose water, and the result is its oxidation. However, the metal can only decompose water at a certain rate; the oxidation does not take place instantaneously. If then we deposit the metal faster than it can waste away by oxidation, by using a current of large quantity, we may succeed in gaining metal and thus secure a deposit. This way of overcoming the difficulty is assisted by using a very strong solution, which allows a current of large quantity to pass with less resistance, and also leaves less water uncombined to act on the metal. By using these devices, Bunsen was enabled to obtain even metallic calcium from a solution of its chloride.

By the density of the current we mean the number of amperes passing through each unit of surface of cathode or depositing surface. If the density is very great, it is necessary that a brisk circulation be kept up in the solution to bring fresh quantities of salt into the sphere of action and to remove the impoverished solution; otherwise, if a deficiency of salt occurs, the solvent is attacked. Rapid circulation therefore favors regular working.

In any electrolytic bath, the tension and density of the current determine which of the several ingredients present will be

decomposed. Let us assume two compounds present, *A* and *B*, of which *A* is a weaker compound than *B*; either one of them may be water, or they may both be anhydrous salts. In such a liquid bath, a current just strong enough to decompose *A* will not affect *B*. When the current is just strong enough to decompose *B*, the product will be the elements of *A* with a trace of those of *B*; but since the base in *B* is supposed to be a stronger one than that in *A*, there will be a secondary action, and the base of *B* will displace the base of *A* in the still undecomposed compound, and *B* will be re-formed. This will be the direct effect of increasing the tension of the current. However, if the density of the current is increased at the same time, another principle comes into play. The base of *B* may be deposited so quickly that it has not time to react on *A*, and in that case the deposit will contain the base of *B*. Also, if there is a much larger proportion of *B* than of *A* present, a larger proportion of its base will be deposited than before and escape re-solution. Also, other things being equal, if the compound *B* is more fluid or rather diffuses quicker in the bath than *A*, more of it will get to the electrodes and a larger proportion be decomposed.

We therefore see that when two or more compounds are present, the relative amounts of each to be decomposed depend

1. Primarily, on the electro-motive force of the current, which may be so regulated as to decompose them one after the other in the order of their electromotive force of decomposition.

2. On the density of the current at the electrodes. That is, provided the tension of the current is sufficient to decompose the stronger compound, the greater the density of the current the greater the proportion of the stronger compound which will be decomposed, other conditions being equal.

3. On the relative amounts of each present. Other conditions being equal, the relative amount of a compound decomposed will increase as its proportion in the bath is increased.

4. On the relative rates of diffusion, or the rapidity with which elements of the different compounds move towards the electrodes.

The consideration of the electrolytic processes falls naturally under two heads:—

I. Deposition from aqueous solution.

II. Non-aqueous electric processes.

I.

Deposition of Aluminium from Aqueous Solution.

The status of this question is one of the curiosities of electro-metallurgic science. Evidently attracted by the great reward to be earned by success, many experimenters have labored in this field, have recommended all sorts of processes, and patented all kinds of methods. We have inventors affirming in the strongest manner the successful working of their methods, while other experimenters have followed these recipes, and tried almost every conceivable arrangement, yet report negative results. To show that it is quite possible that many strong affirmations may be made in good faith, I have only to mention the fact that in March, 1863, Mr. George Gore described in the Philosophical Magazine some experiments by which he deposited coatings of aluminium from aqueous solutions, and afterwards, in his text book of Electro-metallurgy, asserts that he knows of no successful method of doing this thing. We infer that Mr. Gore found that he was in error the first time. So, if we take the position that aluminium cannot by any methods so far advanced be deposited from aqueous solution without using a soluble aluminium anode, we will have to admit that the proposers of many of the following processes are probably misled by their enthusiasm in affirming so strongly that they can do this thing. Yet the problem is not impossible of solution.

Messrs. Thomas and Tilly* coat metals with aluminium and its alloys by using a galvanic current and a solution of freshly precipitated alumina dissolved in boiling water containing potassium cyanide, or a solution of freshly calcined alum in

* English Patent, 1855, No. 2756.

aqueous potassium cyanide; also from several other liquids. Their patent covers the deposition of the alloys of aluminium with silver, tin, copper, iron, silver and copper, silver and tin, etc. etc., the positive electrode being of this metal or alloy.

M. Corbelli, of Florence,* deposits aluminium by electroylzing a mixture of rock alum or sulphate of alumina (2 parts) with calcium chloride or sodium chloride (1 part) in aqueous solution (7 parts), the anode being mercury placed at the bottom of the solution and connected to the battery by an iron wire coated with insulating material and dipping its uncovered end into the mercury. The zinc cathode is immersed in the solution. Aluminium is deposited on the zinc, as a blackish powder or as a thin, compact sheet, and the chlorine which is liberated at the anode unites with the mercury, forming calomel.

J. B. Thompson† reports that he has for over two years been depositing aluminium on iron, steel, and other metals, and driving it into their surfaces at a heat of 500° F., and also depositing aluminium bronze of various tints, but declines to state his process.

George Gore, ‡the noted electrician, recommended the following procedure for depositing aluminium on copper, brass, or German silver:—

"Take equal measures of sulphuric acid and water, or one part sulphuric acid, one part hydrochloric acid and two parts of water, put into it half an ounce of pipe clay to the pint of dilute acid, and boil for an hour. Take the clear, hot liquid and immerse in it an earthen porous cell containing sulphuric acid diluted with ten times its bulk of water, together with a rod or plate of amalgamated zinc. Connect the zinc with the positive wire of a Smee battery of three or four elements connected for intensity. The article to be coated, well cleaned, is connected with the negative pole and immersed in the hot clay solution. In a few minutes a fine, white deposit of aluminium

* English Patent, 1858, No. 507.

† Chem. News, xxiv. 194 (1871).

‡ Philosophical Magazine, March, 1863.

will appear all over its surface. It may then be taken out, washed quickly in clean water, wiped dry, and polished. If a thicker coating is required, it must be taken out as soon as the deposit becomes dull, washed, dried, polished, and re-immersed, and this must be repeated at intervals as often as it becomes dull, until the required thickness is obtained. It is necessary to have the acid well saturated by boiling, or no deposit will be obtained."

Mierzinski asserts that Dr. Gore was mistaken when he supposed this deposit to be aluminium, and in Gore's Text Book of Electro-metallurgy no mention is made of these experiments, the author thereby acknowledging the error. As to what the deposit could have been, we are left to conjecture, since no explanation has been advanced by Dr. Gore; it may possibly have been silicon, mercury, or zinc, as all three of these were present besides aluminium.

J. A. Jeançon* has patented a process for depositing aluminium from an aqueous solution of a double salt of aluminium and potassium of specific gravity 1.161; or from any solution of an aluminium salt, such as sulphate, nitrate, cyanide, etc., concentrated to 20° B. at 50° F. He uses a battery of four pairs of Smee's or three Bunsen's cells, with elements arranged for intensity, and electrolyzes the solutions at 140° F. The first solution will decompose without an aluminium anode, but the others require such an anode on the negative pole. The solution must be acidulated slightly with acid corresponding to the salt used, the temperature being kept at 140° F. constantly.

More recently†, Jeançon has obtained a patent for the following process: "Subjecting a supersaturated acid solution of a salt of aluminium to the action of a current passed from an anode of aluminium in a state of division or porosity, presenting a relatively large exposure of surface within a given field of electric force, and a suitable metallic cathode." Further

* Annual Record of Science and Industry, 1875.

† U. S. Patent, 436,895; Sept. 23, 1890. (Specimens.)

details state that the anode is to be prepared by melting aluminium in a crucible and stirring in about 30 per cent. of carbon or a similar substance, and then moulding into shape. The electrolyte is to be maintained at a high temperature, preferably 180° to 200° F., under which conditions a dense deposit is obtained.

The writer has already stated that aluminium is being successfully electro-plated from solution using aluminium anodes; and, if the above process is the one which has been used in Philadelphia by the Harvey Filley Plating Co., then I can certify to it having been successfully operated. The company mentioned refuse to say anything about the process they use, but I have been informed by outside parties that the above is the one. It is certain, however, that very good specimens of aluminium-plated ware have been made and sold by this firm, several having been examined and tested by the writer personally. A thin deposit on sheet-iron, which has been in my possession over two years, shows no sign of rust or deterioration, and suggests the practicability of thus making a substitute for tin-plate of greater durability and which will not rust.

M. A. Bertrand * states that he deposited aluminium on a plate of copper from a solution of double chloride of aluminium and ammonia, by using a strong current, and the deposit was capable of receiving a brilliant polish.

Jas. S. Haurd,† of Springfield, Mass., patented the electrolysis of an aqueous solution formed by dissolving cryolite in a solution of magnesium and manganous chlorides.

John Braun ‡ decomposes a solution of alum, of specific gravity 1.03 to 1.07, at the usual temperature, using an insoluble anode. In the course of the operation, the sulphuric acid set free is neutralized by the continual addition of alkali; and, afterwards, to avoid the precipitation of alumina, a non-volatile organic acid, such as tartaric, is added to the solution. The

* Chem. News, xxiv. 227.

† U. S. Patent, 228,900, June 15, 1880.

‡ German Patent, No. 28,760 (1883).

intensity of the current is to be so regulated that for a bath of 10 to 20 litres two Bunsen elements (about 20 centimetres high) are used.

Dr. Fred. Fischer* stated that Braun's proposition was contrary to his experience. By passing a current of 8 to 9 volts and 50 amperes, using from 0.1 to 10 amperes per sq. centimetre of cathode, with various neutral and basic aluminium sulphate solutions, with and without organic acids, he obtained no aluminium. He obtained a black deposit of copper sulphide on the copper anode, which had apparently been mistaken by Braun for aluminium.

Moses G. Farmer † has patented an apparatus for obtaining aluminium electrically, consisting of a series of conducting cells in the form of ladles, each ladle having a handle of conducting material extending upwards above the bowl of the next succeeding ladle; each ladle can be heated separately from the rest; the anodes are hung in the ladles, being suspended from the handles of the preceding ladles, the ladles themselves being the cathodes.

M. L. Senet ‡ electrolyzes a saturated solution of aluminium sulphate, separated by a porous septum from a solution of sodium chloride. A current is used of 6 to 7 volts and 4 amperes. The double chloride, $AlCl^3.NaCl$, is formed, then decomposed, and the aluminium liberated deposited on the negative electrode. It has later been remarked of this process that it has not had the wished-for success on a large scale.

Col. Frismuth, of Philadelphia, purported to plate an alloy of nickel and aluminium. He used an ammoniacal solution, probably of their sulphates. The plating certainly resembled nickel, but that it contained aluminium the writer is not prepared to assert.

Baron Overbeck and H. Neiwerth, of Hannover, § have

* Zeitschrift des Vereins Deutsche Ingenieurs, 1884, p. 557.

† U. S. Patent, No. 315,266, April, 1885.

‡ Cosmos les Mondes, Aug. 10, 1885.

§ English Pat., Dec. 15, 1883, No. 5756.

patented the following process: An aqueous or other solution of an organic salt of aluminium is used, or a mixture of solutions which by double decomposition will yield such salt. Or a mixture of a metallic chloride and aluminium sulphate may be used, this yielding nascent aluminium chloride, which the current splits up immediately into aluminium and chlorine.

Herman Reinbold * gives the following recipe, stating that it furnishes excellent results: 50 parts of potash alum are dissolved in 300 parts of water, and to this are added 10 parts of aluminium chloride. The whole is then heated to 200° F., cooled, and then 39 parts of potassium cyanide added. A weak current should be used. It is stated that the plating, when polished, will be found equal to the best silver plating. "Iron," noticing this process, remarks, "there are a number of formulæ for electro-plating with aluminium, but few appear to have attained to practical utility in the arts, for the reason that there is no special demand for such processes. All the qualities that are possessed by an electro-deposit of aluminium are possessed to an equal or superior degree by other metals, silver, nickel, platinum, etc. Furthermore, it obstinately refuses to take and to retain a high lustre." This criticism is a little overdrawn, since the one quality in which aluminium is superior to silver—not blackening by contact with sulphurous vapor—is not mentioned.

Under the name of Count R. de Montegelas, of Philadelphia, several patents have been taken out in England for the electrolysis of aqueous solutions, which may be summarized as follows:—

† Alumina is treated with hydrochloric acid, and aluminium chloride obtained in solution. The liquid is then placed in a vessel into which dip a suitable anode and a cathode of brass or copper. On passing an electric current through the bath the iron present in the liquid is first deposited, and as soon as this deposition ceases (as is apparent by the change of color of the

* Jeweler's Journal, September, 1887.

† English Patent, Aug. 18, 1886, No. 10607.

deposit) the liquid is decanted into another similar bath, and to it is added about fifty per cent. by weight of the oxide of either lead, tin or zinc. On sending a current through this bath, aluminium together with the metal of the added oxide is said to be deposited on the cathode.

* A rectangular vessel is divided into two unequal compartments by a vertical porous partition, into the smaller of which is placed a saturated solution of common salt, in which is immersed a brass or copper electrode; into the larger is put a solution of aluminium chloride, immersed in which is an aluminium electrode. On passing the current the latter solution, which is normally yellow, is gradually decolorized and converted into a solution of aluminium-sodium chloride. When colorless, this solution is taken out and the aluminium deposited in a similarly arranged vessel. The double chloride solution is placed in the larger compartment, with an electrode of brass, copper, or a thin plate of aluminium, while the smaller compartment contains a carbon electrode dipping into a solution of salt and surrounded by fragments of a mixture of salt and double chloride, fused together in equal parts.

The author has been given several ounces of a very fine metallic powder said to have been made by these processes, and which is certainly aluminium. As I am not satisfied, however, that the specimen is really authentic, I feel justified in suspending a final expression of opinion on the process.

A Walker, of Tarnowitz, has patented the following methods of procedure: †

a. Pure commercial hydrate is dissolved in nitric acid free from chlorine, in slight excess, and tartaric acid added. The liquid is let clear for some time, any potassium bi-tartrate, which may be formed from small quantities of potassium adhering to the hydrate, filtered out, and the clear solution electrolyzed. There is added to the solution during electrolysis

* English Patent, Feb. 3, 1887, No. 1751.

† German Pat. (D. R. P.) 40,626 (1887).

organic acid—as formic, acetic, citric, oxalic—or, better, absolute alcohol.

b. A solution of aluminium nitrate, as far as possible free from alkalies and sulphuric acid, is decomposed by a strong dynamic current in baths arranged in series, using platinized plates as anode and cathode. With a weak current of 0.02 to 0.05 amperes to a square centimetre, the aluminium separates out on the cathode as a deep black deposit, sticking close to the copper. The cathode is lifted from the solution, freed from small quantities of alumina coating it by gentle rinsing, and then the deposit washed off by a strong jet of water. The powder obtained is washed further with clear, cold water, particularly free from sodium chloride, and dried by gentle heating in the air.

H. C. Bull* proposes to manufacture aluminium alloys by using the metal to be alloyed with aluminium as a cathode in a bath of aluminium sulphate, the anode being either of aluminium or of an insoluble substance. When enough aluminium is deposited, the cathode is taken out and melted down.

C. A. Burghardt and W. J. Twining, of Manchester, England, have patented the following methods:

† To a solution of sodium or potassium aluminate containing about 7.2 oz. of aluminium per gallon are added 4 pounds of 95 per cent. potassium cyanide dissolved in a quart of water, and then gradually 2¼ pounds of potassium bi-carbonate. The whole is boiled 12 hours and made up to a gallon. The bath is used at 175° F. with aluminium or platinum anode and carbon or copper cathode. The addition of a little free hydrocyanic acid insures a bright deposit when articles are being plated.

‡ Two and one-half kilos of aluminium sulphate in solution is precipitated by ammonia, and then re-dissolved by adding 1⅛ kilos of caustic soda dissolved in a litre of water; the alumina

* English Pat., 10,199 A. (1887).

† English Pat., July 2, 1887, No. 9389.

‡ German Pat. (D. R. P.), 45,020 (1887).

is thus slightly in excess. The hydrocyanic acid is added until a slight precipitate appears. This solution, warmed to 80°, is used as a bath from which aluminium is to be deposited.

*The bath is prepared by dissolving alumina in a solution of chloride of copper, and treating further with caustic soda or potash for the purpose of causing the aluminium and copper to combine together. The precipitate, dissolved in hydrocyanic acid and diluted, forms a bath of double cyanide, which when electrolyzed deposits an alloy of aluminium and copper.

Besides the processes so far described, patents have been taken out in England by Gerhard and Smith,† Taylor,‡ and Coulson,§ the details of which have not been accessible to the author.

Over against these statements of enthusiastic inventors, let me place a few extracts from authorities who have given much time and attention to the subject of electro-depositing aluminium from solution without the use of an aluminium anode.

Sprague‖ states his inability to deposit aluminium electrically from solution.

Dr. Clemens Winckler ¶ states that he has spent much time in trying all methods so far proposed, and comes to the conclusion that aluminium cannot be deposited by electricity in the wet way.

Dr. Geo. Gore** although having once proposed a method which he said attained this end, yet in his later work on Electro-metallurgy does not mention his former proposition, and quotes, apparently as coinciding with his own opinion, the words of Sprague and Winckler given above.

* English Pat., Oct. 28, 1887, No. 2602.

† No. 16,653 (1884).

‡ No. 1991 (1855).

§ No. 2075 (1857).

‖ Sprague's Electricity, p. 309.

¶ Journal of the Chem. Soc., X. 1134.

** Text-book of Electro-metallurgy.

Dr. S. Mierzinski* states, in 1883, that "the deposition of aluminium from an aqueous solution of its salt has not yet been accomplished."

Dr. W. Hampe† claims to have shown that the electrolysis of aqueous aluminous solutions, although frequently patented, is not to be expected. From which we would infer that he could not testify to it ever having been done.

Alexander Watt‡ holds that the electrolytic production of aluminium from solution is very improbable. He tried acid solutions, alkaline solutions, cyanide combinations, etc., under most varied conditions, without any result.

Finally, I will quote from a letter of my good friend Dr. Justin D. Lisle, of Springfield, O., who with ample means at his disposal, an enthusiasm bred of love for scientific truth, and talent to guide him in his work, has reached the following results: "I have tried in almost every conceivable way to deposit it (aluminium) from aqueous solution by electricity, using from 1 pint cells to 60 gallon cells successively; the cells were connected for quantity and for intensity; acid and neutral solutions were used; carbon, platinum, and copper electrodes, porous cups and diaphragms, were all thoroughly tried, without the slightest deposit of metal. In some cases alumina was deposited, which has led me to think that aluminium was primarily deposited, and owing to the fine state in which it existed was promptly oxidized."

The following details of the operation of the electric plant of the Tacony Metal Company, near Philadelphia, under the supervision of Mr. J. D. Darling, are all that the writer has been able to gather respecting their process. This company had the contract to electroplate the exterior ironwork of the tower of the Philadelphia Public Buildings, there being altogether about 50,000 square feet to be plated, on which was to be deposited 20,000 pounds of aluminium, or a little over six

* Die Fabrikation des Aluminiums.

† Chem. Zeit. (Cöthen), XI. 935.

‡ London Electrical Review, July, 1887.

ounces to the foot. This would give a smooth coating $\frac{1}{35}$ inch thick. The cast-iron work is first given a coating of copper, and the aluminium deposited on it, but it is stated that good platings have been obtained directly on the cast-iron.

The largest pieces plated were columns 26 feet long and 3 feet in diameter. The whole operation of treating such a column lasted 11 days, while the plant could turn out one every 4 days. The operations were as follows:

(1) Boiling 24 hours in a strong solution of caustic soda, after which well washed.

(2) Pickled in dilute sulphuric acid 24 hours, brushed vigorously and washed.

(3) Copper-plated by immersion 40 hours in a copper cyanide(?) solution. The column was then brushed with paraffine wax inside, any flaws soldered up, and—

(4) Copper-plated again in an ordinary copper-plating solution for 72 hours, until 16 ounces of copper to the square foot had been deposited.

(5) Put into the aluminium-plating tank, and 3 ounces of aluminium per square foot deposited on it. Time, 72 hours. Column then well washed in the sixth tank.

The dynamo used for operation 3 gives a current of 1000 amperes at 6 volts tension; for operation 4, 4000 amperes at 2.5 volts tension; for operation 5, 2000 amperes at 8 volts tension. In the latter case, the current density at the depositing surface was 8 amperes per square foot (86 amperes per square metre). In this depositing tank, aluminium anodes 4 feet long, 12 inches wide and ¾ inch thick were used. Sixty of these plates, weighing 35 pounds each, were hung around the inside of the tank.

The company will give no information regarding the composition of the electrolyte. Concerning the conducting of the operation, Mr. Darling has stated that "Aluminium is more difficult to deposit than any of the common metals, because of its tendency to re-dissolve after being deposited. I find that by using a solution of aluminium salt that has but a slight dis-

solving effect on aluminium, with a density of current of 8 amperes per square foot, and with sufficiently high voltage, aluminium can be deposited at the rate of 1 gramme per hour per square foot in a reguline state. With much higher currents it can be deposited quicker, but will be in a pulverulent state, which does not adhere."

II.

Non-aqueous Electric Processes.

The above heading was originally written, "The electrolytic decomposition of fused aluminium compounds," but I have changed it to this form because it is doubtful, in several cases, whether electrolytic decomposition really plays much of a rôle in the isolation of the aluminium. In some processes a powerful current is used and largely converted into heat, producing temperatures never before used in industrial operations. In such cases, chemical reactions, rendered possible by the very high temperature, come into play and may even be the principal means of reducing the aluminium compound. It has been suggested that such processes should be classed apart as "electro-thermal methods;" but such a division does not appear satisfactory to me, because in most cases we cannot say positively that electrolysis does not play some part, and in others it is simply impossible to decide which of the two agents of reduction, electrolysis or chemical affinity, is the most active. It has been suggested also that those processes in which high voltage is used cannot be electrolytic, but must be electro-thermal; but such a division is not logical. If a bath is taking a high voltage to work it, it may be solely from poor conductivity in the electrolyte, and not because an arc is formed in the bath, and true electrolysis may be going on to the full extent of the power of the current. If we knew definitely, for each process, which action played the *principal part* in the reduction, we might classify the processes, but such a classification would not be of much use. If it was absolutely necessary to make some

such division, I should consider as electro-thermal those processes in which the parts of the apparatus used are not arranged as they should be to secure the maximum electrolytic decomposition. We could thus, in such cases, say at once, from a consideration of the apparatus and its manner of working, that electrolysis was evidently not contemplated in its construction and could only play a minor part in its operation.

In conclusion, I regard it impossible to make an exact classification of these processes such as would be of any value to the metallurgist or aid the general reader to a better understanding of them, and I therefore take them up in chronological order.

Davy's Experiment (1810).

Sir Humphry Davy, in his Brompton Lecture before the Royal Philosophical Society,* described the following attempt to decompose alumina and obtain the metal of this earth. He connected an iron wire with the negative pole of a battery consisting of 1000 double plates. The wire was heated to whiteness and then fused in contact with some moistened alumina, the operation being performed in an atmosphere of hydrogen. The iron became brittle, whiter, and on being dissolved in acid gave a solution from which was precipitated alumina, identical with that used.

It is evident that the alumina had been reduced by the chemical action of the hydrogen gas, a reaction which we now know takes place below the fusing point of alumina, 2200°, and probably begins as low as 1700°.

Duvivier's Experiment (1854).

M. Duvivier † states that by passing an electric current from eighty Bunsen cells through a small piece of laminated disthene between two carbon points, the disthene melted entirely in two or three minutes; the elements which composed it were partly

* Philosophical Transactions, 1810.

† The Chemist, Aug., 1854.

disunited by the power of the electric current, and some aluminium freed from its oxygen. Several globules of the metal separated, one of which was as white and as hard as silver.

Since disthene is aluminium silicate, formula $Al_2O_3.SiO_2$, it is most likely that the metal obtained was highly siliceous aluminium, since complete reduction of this compound would give 54 parts of aluminium to 28 parts of silicon. The highly-heated carbon particles of the electric arc were most probably the reducing agent.

Bunsen's and Deville's Methods (1854).

A method of decomposing aluminium-sodium chloride by the battery was discovered simultaneously by Deville in France and Bunsen in Germany, in 1854, and is nothing else but an application of the process already announced by Bunsen of decomposing magnesium chloride by the battery. Deville gives the more minute account, and we therefore quote his description of the process.

† "It appears to me impossible to obtain aluminium by the battery in aqueous solutions. I should believe this to be an absolute impossibility if the brilliant experiments of M. Bunsen in the preparation of barium, chromium and manganese did not shake my convictions. Still I must say that all the processes of this description which have recently been published for the preparation of aluminium have failed to give me any results. Every one knows the elegant process by means of which M. Bunsen has lately produced magnesium, decomposing fused magnesium chloride by an electric current. The illustrious professor at Heidelberg has opened up a method which may lead to very interesting results. However, the battery cannot be used for decomposing aluminium chloride directly, which does not melt, but volatilizes at a low temperature; it is, therefore, necessary to use some other material which is fusible and in which

* The Chemist, Aug. 1854.

† Ann. de Chem. et de Phys. [3], 46, 452; Deville's "de l'Aluminium."

aluminium alone will be displaced by the current. I have found this salt in the double chloride of aluminium and sodium, which melts towards 185° C., is fixed at a somewhat high temperature, although volatile below the fusing point of aluminium, and thus unites all the desirable conditions.

"I put some of this double chloride into a porcelain crucible separated imperfectly into two compartments by a thin leaf of porcelain, and decomposed it by means of a battery of five elements and carbon electrodes. The crucible was heated more and more as the operation progressed, for the contents became less and less fusible, but the heat was not carried past the melting point of aluminium. Arrived at this point, after having lifted out the diaphragm and electrodes, I heated the crucible to bright redness, and found at the bottom a button of aluminium, which was flattened out and shown to the Academy in the Séance of March 20, 1854. The button was accompanied by a considerable quantity of carbon, which prevented the union of a considerable mass of shot-metal. This carbon came from the disintegration of the very dense gas-retort carbon electrodes; in fact, the positive electrode was entirely eaten away in spite of its considerable thickness. It was evident, then, that this apparatus, although similar to that adopted by Bunsen for manufacturing magnesium, would not suit here, and the following is the process which after many experiments I hold as best.

"To prepare the bath for decomposition, I heat a mixture of 2 parts aluminium chloride and 1 part sodium chloride, dry and pulverized, to about 200° in a porcelain capsule. They combine with disengagement of heat, and the resulting bath is very fluid. The apparatus which I use for the decomposition comprises a glazed porcelain crucible, which as a precaution is placed inside a larger one of clay. The whole is covered by a porcelain cover pierced by a slit to give passage to a large thick leaf of platinum, which serves as the negative electrode; the lid has also a hole through which is introduced, fitting closely, a well-dried porous cylinder, the bottom of which is kept at some distance from the inside of the porcelain crucible. This porous

vessel encloses a pencil of retort carbon, which serves as the positive electrode. Melted double chloride is poured into the porous jar and into the crucible so as to stand at the same height in both vessels; the whole is heated just enough to keep the bath in fusion, and there is passed through it the current from several Bunsen cells, two cells being strictly sufficient. The annexed diagram shows the crucibles in section.

FIG. 28.

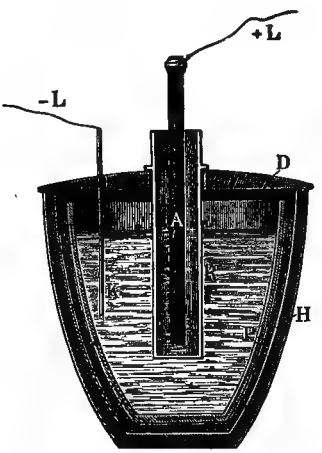

"The aluminium deposits with some sodium chloride on the platinum leaf; the chlorine, with a little aluminium chloride, is disengaged in the porous jar and forms white fumes, which are prevented from rising by throwing into the jar from time to time some dry, pulverized sodium chloride. To collect the aluminium, the platinum leaf is removed when sufficiently charged with the saline and metallic deposit; after letting it cool, the deposit is rubbed off and the leaf placed in its former position. The material thus detached, melted in a porcelain crucible, and after cooling washed with water, yields a gray, metallic powder, which by melting several times under a layer of the double chloride is reunited into a button."

Bunsen* adopted a similar arrangement. The porcelain cru-

* Pogg. Annalen, 97, 648.

cible containing the bath of aluminium-sodium chloride kept in fusion was divided into two compartments in its upper part by a partition, in order to separate the chlorine liberated from the aluminium reduced. He made the two electrodes of retort carbon. To reunite the pulverulent aluminium, Bunsen melted it in a bath of the double chloride, continually throwing in enough sodium chloride to keep the temperature of the bath about the fusing point of silver.

As we have seen, Deville, without being acquainted with Bunsen's investigations, employed the same arrangement, but he abandoned it because the retort carbon slowly disintegrated in the bath, and a considerable quantity of double chloride was lost by the higher heat necessary to reunite the globules of aluminium after the electrolysis. Deville also observed that by working at a higher temperature, as Bunsen had done, he obtained purer metal, but in less quantity. The effect of the high heat is that silicon chloride is formed and volatilizes, and the iron which would have been reduced with the aluminium is transformed into ferrous chloride by the aluminium chloride, and thus the aluminium is purified of silicon and iron.

Plating aluminium on copper.—The same bath of double chloride of aluminium and sodium may be used for plating aluminium in particular on copper, on which Capt. Caron experimented with Deville. Deville says: "To succeed well, it is necessary to use a bath of double chloride which has been entirely purified from foreign metallic matter by the action of the battery itself. When aluminium is being deposited at the negative pole, the first portions of metal obtained are always brittle, the impurities in the bath being removed in the first metal thrown down; so, when the metal deposited appears pure, the piece of copper to be plated is attached to this pole and a bar of pure aluminium to the positive pole. However, a compact mixture of carbon and alumina can be used instead of the aluminium anode, which acts similarly to it and keeps the composition of the bath constant. The temperature ought to be kept a little lower than the fusing point of aluminium. The deposit takes place readily

and is very adherent, but it is difficult to prevent it being impregnated with double chloride, which attacks it the moment the piece is washed. The washing ought to be done in a large quantity of water Cryolite might equally as well be used for this operation, but its fusibility should be increased by mixing with it a little double chloride of aluminium and sodium and some potassium chloride."

During a recent law-suit for infringement of the Hall process, it was held by the defendants that Deville electrolyzed a fluoride bath, (cryolite) in which alumina was present and therefore would be dissolved. It appears quite evident, however, that Deville did not use cryolite, because it would have destroyed the porcelain crucibles and necessitated the use of special apparatus which Deville does not even hint at. It is, moreover, true that when alumina is mixed with carbon the latter prevents the cryolite from wetting or coming into actual contact with it. In an experiment by the writer, a large cylinder of carbon into which had been incorporated over 50 per cent. of alumina was kept in molten cryolite for several hours, and on being taken out showed not the slightest sign of corrosion. Judges Taft and Ricks of Ohio very properly ruled that Deville's experiments did not in any way disclose or operate on the principle utilized by Mr. Hall.

Le Chatellier's Method (1861).

The subject of this patent* was the decomposition of the fused double chloride of aluminium and sodium, with the particular object of coating or plating other metals, the articles being attached to the negative pole. About the only novelty claimed in this patent was the use of a mixture of alumina and carbon for the anode, but we see from the previous paragraph that this was suggested by Deville several years before; the only real improvement was the placing of this anode inside a porous cup, in order to prevent the disintegrated carbon from

* English Patent, 1861, No. 1214.

falling into the bath. This was really only the Deville process, patented in England.

Monckton's Patent (1862).

Monckton * proposes to pass an electric current through a reduction chamber, and in this way to raise the temperature to such a point that alumina will be reduced by the carbon present. We clearly see in this the germ of several more-recently patented processes.

Gaudin's Process (1869).

Gaudin † reduces aluminium by a process to which he applies the somewhat doubtful title of economic. He melts together equal parts of cryolite and sodium chloride, and traverses the fused mass by a galvanic current. Fluorine is evolved at the positive pole, while aluminium accumulates at the negative.

The great difficulties in such a process are the obtaining of suitable vessels to withstand the corrosion of the bath, the great inconvenience of the escaping fluoride gas, and the increase of resistance due to the change of composition of the bath. It would need several additional patents to render this process operative, without mentioning economy.

Kagensbusch's Process (1872).

Kagensbusch,‡ of Leeds, proposes to melt clay with fluxes, then adding zinc or a like metal to pass an electric current through the fused mass, isolating an alloy of aluminium and the metal, from which the foreign metal may be removed by distillation, sublimation, or cupellation.

If the patentee had used pure alumina instead of clay, he might have produced some aluminium by his process, but the silicon in the clay would get into the zinc in larger proportion

* English Patent, 1862, No. 264.

† Moniteur Scientifique, xi., 62.

‡ English Patent, 1872, No. 4811.

than the aluminium, rendering the succeeding operations for obtaining pure aluminium impossible.

Berthaut's Proposition (1879).

Up to this time all the proposed electric processes were confined to the use of a galvanic current, the cost of obtaining which was a summary bar to all ideas of economical production. About this period dynamo-electric machines were being introduced into metallurgical practice, and Berthaut is the first we can find who proposes their use in producing aluminium. The process which he patented * is otherwise almost identical with Le Chatellier's.

Grätzel's Process (1883).

This process † has little claim to originality, except in the details of the apparatus. A dynamo-electric current is used, the electrolyte is fused cryolite or double chloride of aluminium and sodium, and the anodes are of pressed carbon and alumina —none of which points are new. However, the use of melting pots of porcelain, alumina, or aluminium, and making them the negative electrode, are points in which innovations are made.

In a furnace are put two to five pots, according to the power of the dynamo used, each pot having a separate grate. The pots are preferably of metal, cast-steel is used, and form the negative electrodes. The positive electrode, *K* (Fig. 29), can be made of a mixture of anhydrous alumina and carbon pressed into shape and ignited. A mixture of alumina and gas-tar answers very well; or it can even be made of gas-tar and gas-retort carbon. During the operation little pieces of carbon fall from it and would contaminate the bath, but are kept from doing so by the mantle *G*. This isolated vessel, *G*, is perforated around the lower part at *g*, so that the molten electrolyte may circulate through. The tube O^1 conducts reducing gas into the

* English Patent, 1879, No. 4087.

† German Patent (D. R. P.), No. 26962 (1883).

crucible, which leaves by the tube O^2. This reducing atmosphere is important, in order to protect from burning any metal rising to the surface of the bath. The chlorine set free at the electrode, *K*, partly combines with the alumina in it, regenerating the bath, but some escapes, and, collecting in the upper part of the surrounding mantle, *G*, is led away by a tube con-

FIG. 29.

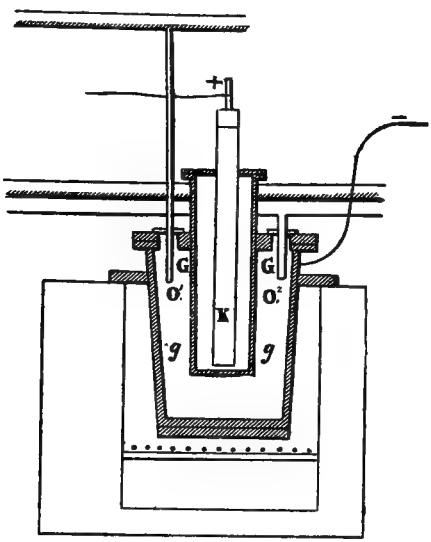

necting with it. Instead of making the electrode *K* of carbon and alumina, it may simply be of carbon, and then plates of pressed alumina and carbon are placed in the bath close to the electrode, *K*, but not connected with it. Also, in place of making the crucible of metal and connecting it with the negative pole, it may be made of a non-conducting material, clay or the like, and a metallic electrode—as, for instance, of aluminium—plunged into the bath.

In a later patent,* Grätzel states that the bath is decomposed

* English Patent, 14325, Nov. 23, 1885. U. S. Patent, 362441, May 3, 1887.

by a current of comparatively low tension if magnesium chloride be present; the chlorides of barium, strontium or calcium act similarly.

Prof. F. Fischer* maintains as impracticable the use of plates of pressed alumina and carbon, which can, further, only be operative when they are made the positive electrode, and then their electric resistance is too great. The incorporation into them of copper filings, saturation with mercury, etc., give no more practical results. There are also volatilized at the anodes considerable quantities of aluminium chloride, varying in amount with the strength of the current.

Large works were erected near Bremen by the Aluminium und Magnesiumfabrik Pt. Grätzel, zu Hemelingen, in which this process was installed. License was also granted to the large chemical works of Schering, at Berlin, to operate it. R. Biedermann, in commenting on the process in 1886,† stated that the results obtained so far were not fully satisfactory, but the difficulties which had been met were of a kind which would certainly be overcome. They were principally in the polarization of the cathode, by which a large part of the current was neutralized. By using proper depolarizing substances this difficulty would be removed. The utilization of the chlorine evolved would also very much decrease the expenses. A more suitable slag, which collected the aluminium together better, was also desirable. Finally, the metal produced was somewhat impure, taking up iron from the iron pots and silicon from the clay ones, to obviate which Biedermann recommended the use of lime or magnesia vessels.

Prof. Fischer, as we have seen, maintained the uselessness of Grätzel's patent claims, and his later expression of this opinion in 1887 drew a reply from A. Saarburger, ‡director of the works at Hemelingen, to the effect that since October, 1887, they had

* Wagner's Jahresbericht, 1884, p. 1319; 1887, p. 376.

† Kerl und Stohman, 4th ed., p. 725.

‡ Verein der Deutsche Ingenieure, Jan. 26, 1889.

abandoned the Grätzel process, and were making aluminium at present by methods devised by Herr Saarburger; in consequence of which fact the directors of the company decided in January, 1888, to drop the addition Pt. Grätzel from the firm name. The methods then in use at Hemelingen were kept secret, but the author was informed by a friend in Hamburg that they were using a modified Deville sodium process. Herr Saarburger informed me in October, 1888, that they were producing pure aluminium at the rate of 12 tons a year, besides a large quantity sold in alloys. An attractive pamphlet issued by this firm set forth precautions to be used in making aluminium alloys, together with a digest of their most important properties, which we shall have occasion to quote from later in considering those alloys.

The sharp decline in the price of aluminium in 1890 forced this company out of the aluminium business.

Cowles Bros.' Process.

Messrs. E. H. and A. H. Cowles patented in the United States and Europe * an electric furnace and its application for producing aluminium. Their patent claims "reducing an aluminium compound in company with a metal in presence of carbon in a furnace heated by electricity; the alloy of aluminium and the metal formed being further treated to separate out the aluminium." The history of the development of this process having already been sketched, we will proceed to describe the details of its operation. The first public description was given in two papers, one read before the American Association for the Advancement of Science † by Prof. Chas. F. Mabery of the Case School of Applied Science, Cleveland, the other before the American Institute of Mining Engineers ‡ by Dr. T. Sterry Hunt, of Montreal.

* U. S. Patents 324658, 324659, Aug. 18, 1885; English Patent 9781, same date; German Patent 33672.

† Ann Arbor Meeting, Aug. 28, 1885.

‡ Halifax Meeting, Sept. 16, 1885.

Prof. Mabery said in his paper: "Some time since, the Messrs. Cowles conceived the idea of obtaining a continuous high temperature on an extended scale by introducing into the path of an electric current some material that would afford the requisite resistance, thereby producing a corresponding increase in the temperature. After numerous experiments, coarsely pulverized carbon was selected as the best means for maintaining an invariable resistance, and at the same time as the most available substance for the reduction of oxides. When this material, mixed with the oxide to be reduced, was made a part of the electric circuit, inclosed in a fire-clay retort, and subjected to the action of a current from a powerful dynamo, not only was the oxide reduced, but the temperature increased to such an extent that the whole interior of the retort fused completely. In other experiments lumps of lime, sand, and corundum were fused, with a reduction of the corresponding metal; on cooling, the lime formed large, well-defined crystals, the corundum beautiful red-green and blue octahedral crystals. Following up these results, it was soon found that the intense heat thus produced could be utilized for the reduction of oxides in large quantities, and experiments were next tried on a large scale with the current from a fifty horse-power dyamo. For the protection of the walls of the furnace, which were of fire-brick, a mixture of ore and coarsely pulverized gas-carbon was made a central core, and was surrounded on the side and bottom by fine charcoal, the current following the lesser resistance of the core from carbon electrodes inserted in the ends of the furnace in contact with the core. The furnace was charged by first filling it with charcoal, making a trough in the centre, and filling this with the ore mixture, the whole being covered with a layer of coarse charcoal. The furnace was closed on top with fire-brick slabs containing two or three holes for the escape of the gaseous products of the reduction, and the whole furnace was made air-tight by luting with fire-clay. Within a few minutes after starting the dynamo, a stream of carbonic oxide issued through the openings, burning usually with a flame

eighteen inches high. The time required for complete reduction was ordinarily about an hour. Experience has already shown that aluminium, silicon, boron, manganese, sodium and potassium can be reduced from their oxides with ease. In fact, there is no oxide that can withstand the temperature attainable in this furnace. Charcoal is changed to graphite; does this indicate fusion? As to what can be accomplished by converting enormous electrical energy into heat within narrow limits, it can only be said that it opens the way into an extensive field of pure and applied chemistry. It is not difficult to conceive of temperature limited only by the power of carbon to resist fusion.

"Since the motive power is the chief expense in accomplishing reductions by this method, its commercial success is closely connected with obtaining power cheaply. Realizing the importance of this point, Messrs. Cowles have purchased at Lockport, N. Y., a water-power where they can utilize 1200 horse-power. An important feature in the use of these furnaces from a commercial standpoint is the slight technical skill required in their manipulation. The four furnaces operated in the experimental laboratory at Cleveland are in charge of two young men, who six months ago knew absolutely nothing of electricity. The products at present manufactured are the various grades of aluminium bronze, made from a rich furnace product obtained by adding copper to the charge of ore. Aluminium silver is also made; and a boron bronze may be prepared by the reduction of boracic acid in contact with copper, while silicon bronze is made by reducing silica in contact with copper. As commercial results may be mentioned the production in the experimental laboratory, which averages 50 lbs. of 10 per cent. aluminium bronze daily, which can be supplied to the trade in large quantities on the basis of $5 per lb. for the aluminium contained, the lowest market quotation of aluminium being now $15 per lb."

Dr. Hunt stated further that if the mixture consisted of alumina and carbon only, the reduced metal volatilized, part es-

caping into the air and burning to alumina, part condensing in the upper layer of charcoal, affording thus crystalline masses of nearly pure aluminium and yellow crystals supposed to be a compound of aluminium with carbon. Great loss was met in collecting this divided metal into an ingot, so that only small quantities were really obtained. To gather all the aluminium together, a metal such as copper was added, thus producing an alloy with 15 to 20 per cent. of aluminium; on substituting this alloy for pure copper in another operation, an alloy with over 30 per cent. of aluminium was obtained.

Dr. Hunt, in a later paper,* stated that pure aluminium has been obtained in this process by first producing in the furnace an alloy of aluminium and tin, then melting this with lead, when the latter takes up the tin and sinks with it beneath the aluminium. He also stated that in the early experiments a dynamo driven by a 30 horse-power engine yielded a daily output of 50 lbs. of 10 per cent. aluminium bronze, but with a larger machine the output was proportionally much greater. In the latest practice, one-half cent per horse-power per hour is said to cover the expense of working, making the 10 per cent. bronze cost about 5 cents per lb. over the copper used.

Various shapes of furnaces have been used by the Cowles Bros., the first described being a rectangular box, lined with carbon, with the electrodes passing through the ends. Although two other forms have been patented, we understand that the kind now used, aad which is described at length in Mr. Thompson's paper, is also of the oblong, horizontal style. Chas. S. Bradley and Francis B. Crocker, of New York, patented and assigned to the Cowles Electric Smelting Company,† the use of a retort, composed of conducting material, surrounded by a substance which is a poor conductor of heat, and having inside a mixture of charcoal and the ore to be heated. Electric connection being made with the ends of the retort, the walls of

* National Academy of Science, Washington Meeting, April 30, 1886.

† U. S. Patent 335499, Feb. 2, 1886.

the retort and the material in it are included in the circuit and constitute the greater part of the resistance. The retort may be stoppered at each end during the operation, and the heating thus performed in a reducing atmosphere. Mr. A. H. Cowles devised a style of furnace adapted for continuous working and utilizing the full current of a dynamo of the largest size.† The electrodes are tube-shaped and placed vertically. The positive pole is above, and is surmounted by a funnel in which the mixture for reduction is placed. The regular delivery of the mixture is facilitated by a carbon rod, passing through the cover of the funnel, which is serrated on the end and can be worked up and down. The melted alloy produced, with any slag, passes down through the negative electrode. The distance between the poles can be regulated by moving the upper one, and the whole is inclosed in a fire-brick chamber. The space between the electrodes and the walls is filled with an isolating material, which is compact around the lower electrode but coarse grained around the upper to facilitate the escape of the gases produced. The chamber is tightly closed excepting a small tube for the escape of gas.

A very complete description of the Cowles process was given by Mr. W. P. Thompson (agent for the Cowles Co. in England) in a paper read before the Liverpool Section of the Society of Chemical Industry.† He describes the process as then carried on in Lockport, the dynamo used being a large Brush machine weighing 2½ tons and consuming about 100 horse-power in being driven at 900 revolutions per minute.

"Conduction of the current of the large dynamo to the furnace and back is accomplished by a complete metallic circuit, except where it is broken by the interposition of the carbon electrodes and the mass of pulverized carbon in which the reduction takes place. The circuit is of 13 copper wires, each 0.3 inch in diameter. There is likewise in the circuit an ampère meter, or am-

* English Patent 4664 (1887).

† Journal of the Society of Chemical Industry, April 29, 1886.

meter, through whose helix the whole current flows, indicating the total strength of the current being used. This is an important element in the management of the furnace, for, by the position of the finger on the dial, the furnace attendant can tell to a nicety what is being done by the current in the furnace. Between the ammeter and the furnace is a resistance coil of German silver kept in water, throwing more or less resistance into the circuit as desired. This is a safety appliance used in changing the current from one furnace to another, or to choke off the current before breaking it by a switch.

"The furnace (see Figs. 30, 31, 32) is simply a rectangular

FIG. 30.

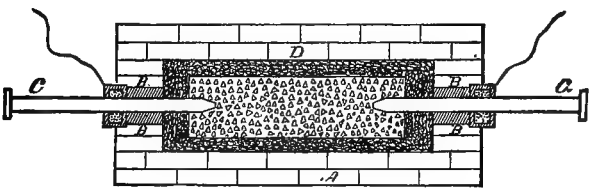

PLAN.

box, *A*, one foot wide, five feet long inside, and fifteen inches deep, made of fire-brick. From the opposite ends through the pipes *BB* the two electrodes *CC* pass. The electrodes are immense electric-light carbons three inches in diameter and thirty

FIG. 31.

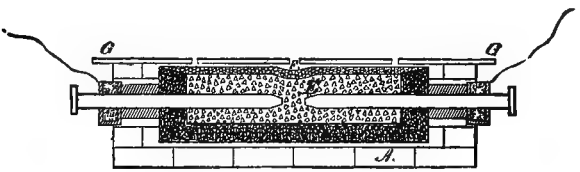

LONGITUDINAL SECTION.

inches long. If larger electrodes are required, a series this size must be used instead, as so far all attempts to make larger carbons that will not disintegrate on becoming incandescent have failed. The ends of the carbons are placed within a few inches

of each other in the middle of the furnace, and the resistance coil and ammeter are placed in the circuit. The ammeter registers 50 to 2000 ampères. These connections made, the furnace is ready for charging.

"The walls of the furnace must first be protected, or the intense heat would melt the fire-brick. The question arose, what would be the best substance to line the walls. Finely powdered charcoal is a poor conductor of electricity, is considered infusible and the best non-conductor of heat of all solids. From these properties it would seem the best material. As long as

FIG. 32.

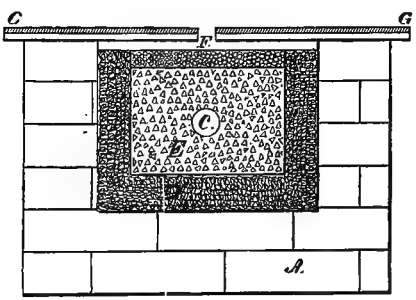

TRANSVERSE SECTION.

air is excluded it will not burn. But it is found that after using pure charcoal a few times it becomes valueless; it retains its woody structure, as is shown in larger pieces, but is changed to graphite, a good conductor of electricity, and thereby tends to diffuse the current through the lining, heating it and the walls. The fine charcoal is therefore washed in a solution of lime-water, and after drying each particle is insulated by a fine coating of lime. The bottom of the furnace is now filled with this lining about two or three inches deep. A sheet-iron gauge is then placed along the sides of the electrodes, leaving about two inches between them and the side walls, in which space more of the charcoal is placed. The charge *E*, consisting of about 25 pounds of alumina, in its native form as corundum, 12

pounds of charcoal and carbon, and 50 pounds of granulated copper, is now placed within the gauge and spread around the electrodes to within a foot of each end of the furnace. For making iron alloy where silicon also is not harmful, bauxite or various clays containing iron and silica may be used instead of the pure alumina or corundum. In place of granulated copper, a series of short copper wires or bars can be placed parallel to each other and transverse to the furnace, among the alumina and carbon, it being found that where grains are used they sometimes fuse together in such a way as to short-circuit the current. After this, a bed of charcoal, *F*, the granules of which vary in size from a chestnut to a hickory, is spread over all, and the gauge drawn out. This coarse bed of charcoal above the charge allows free escape of the carbonic oxide generated in the reduction. The charge being in place, an iron top, *G*, lined with fire-brick, is placed over the whole furnace and the crevices luted to prevent access of air. The brick of the walls insulate the cover from the current.

"Now that the furnace is charged, and the cover luted down, it is started. The ends of the electrodes were in the beginning placed close together, as shown in the longitudinal section, and for this cause the internal resistance of the furnace may be too low for the dynamo, and cause a short circuit. The operator, therefore, puts sufficient resistance into the circuit, and by watching the ammeter, and now and then moving one of the electrodes out a trifle, he can prevent undue short-circuiting in the beginning of the operation. In about ten minutes, the copper between the electrodes has been melted and the latter are moved far enough apart so that the current becomes steady. The current is now increased till 1300 ampères are going through, driven by 50 volts. Carbonic oxide has already commenced to escape through the two orifices in the top, where it burns with a white flame. By slight movements outward of the electrodes during the coming five hours, the internal resistance in the furnace is kept constant, and at the same time all the different parts of the charge are brought in turn into the zone

of reduction. At the close of the run the electrodes are in the position shown in the plan, the furnace is shut down by placing a resistance in the circuit, and then the current is switched into another furnace charged in a similar manner. It is found that the product is larger if the carbons are inclined at angles of 30° to the horizontal plane, as in Fig. 33.

FIG. 33.

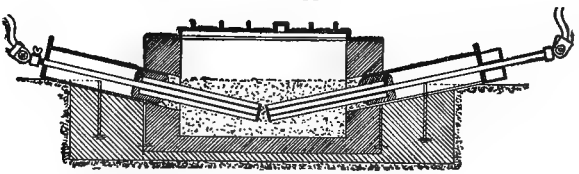

SECTION OF THE COWLES FURNACE.

"This regulating of the furnace by hand is rather costly and unsatisfactory. Several experiments have therefore been tried to make it self-regulating, and on January 26, 1886, a British patent was applied for by Cowles Bros. covering an arrangement for operating the electrodes by means of a shunt circuit, electro-magnet, and vibrating armature. Moreover, if the electrodes were drawn back and exposed to the air in their highly heated state, they would be rapidly wasted away. To obviate this, Messrs. Cowles placed what may be called a stuffing-box around them, consisting of a copper box filled with copper shot. The wires are attached to the boxes instead of the electrodes. The hot electrodes as they emerge from the furnace first encounter the shot, which rapidly carry off the heat, and by the time they emerge from the box they are too cool to be oxidized by contact with the air.

"Ninety horse-power have been pumped into the furnace for five hours. At the beginning of the operation the copper first melted in the centre of the furnace. There was no escape for the heat continually generated, and the temperature increased until the refractory corundum melted, and being surrounded on all sides by carbon, gave up its oxygen. This oxygen, uniting with the carbon to form carbonic oxide, has generated heat

which certainly aids in the process. The copper has had nothing to do with the reaction, as it will take place in its absence. Whether the reaction is due to the intense heat or to electric action it is difficult to say. If it be electric, it is Messrs. Cowles' impression that we have here a case where electrolysis can be accomplished by an alternating current, although it has not been tried as yet. Were the copper absent, the aluminium set free would now absorb carbon, and become a yellow crystalline carbide of aluminium; but, instead of that, the copper has become a boiling, seething mass, and the bubblings of its vapors may distinctly be heard. The vapors probably rise an inch or two, condense, and fall back, carrying with them the freed aluminium. This continues until the current is taken off the furnace, when we have the copper charged with 15 to 30 per cent., and in some cases as high as 40 per cent. of its weight of aluminium, and a little silicon. After cooling the furnace this rich alloy is removed. A valuable property of the fine charcoal is that the metal does not spread and run through the interstices, but remains as a liquid mass, surrounded below and on the sides by fine charcoal, which sustains it just as flour or other fine dust will sustain drops of water for considerable periods, without allowing them to sink in. The alloy is white and brittle. This metal is then melted in an ordinary crucible furnace, poured into large ingots, the amount of aluminium in it determined by analysis, again melted, and the requisite amount of copper added to make the bronze desired.

"Two runs produce in ten hours' average work 100 pounds of white metal, from which it is estimated that Cowles Bros., at Lockport are producing aluminium in its alloys at a cost of about 40 cents per lb. The Cowles Company will shortly have 1200 horse-power furnaces. With a larger furnace there is no reason why it should not be made to run continuously, like the ordinary blast furnace.

"In place of the copper any non-volatile metal may be used as a condenser to unite with any metal it may be desired to reduce, provided, of course, that the two metals are of such a

nature that they will unite at this high temperature. In this way aluminium may be alloyed with iron, nickel, silver, tin or cobalt. Messrs. Cowles have made alloys containing 50 aluminium to 50 of iron, 30 aluminium to 70 of copper, and 25 aluminium to 75 of nickel. Silicon or boron or other rare metals may be combined in the same way, or tertiary alloys may be produced; as, for instance, where fire-clay is reduced in presence of copper we obtain an alloy of aluminium, silicon and copper."

Soon after Mr. Thompson's description, the plant at Lockport was increased by the addition of the largest dynamo up to that time constructed, built by the Brush Electric Company, and dubbed the "Colossus." This machine weighs almost ten tons, and when driven at 423 revolutions per minute it produced a useful current of 3400 ampères at a tension of 68 volts, or at 405 revolutions produced a current of 3200 ampères with 83 volts electro-motive force, indicating 249,000 Watts or 334 electric horse-power. The steam engine was, in the latter case, developing nearly 400 horse-power, and could not supply more; it was judged that the dynamo could have been driven to 300,000 Watts with safety. The first run with this machine was made in September, 1886. The furnaces used for this current are of the same style as that described by Mr. Thompson, but are larger, the charge being 60 lbs. of corundum, 60 lbs. of granulated copper, 30 lbs. of coarse charcoal besides the pulverized lime-coated charcoal used in packing. The operation of reducing this charge takes about two hours. As soon as the operation is finished the current is switched off into another furnace prepared and charged, so that the dynamo is kept working continuously. In 1888, the Cowles Company had two of these large dynamos in operation, and eight furnaces in use. With two-hour runs a furnace is tapped every hour, producing about 80 lbs. of bronze averaging 18 per cent. of aluminium. The capacity of the plant is, therefore, about 1½ tons of 10 per cent. bronze per day. Their alloys were sold in 1890 on the basis of $2.50 per lb. for the contained aluminium.

The Cowles Syndicate Company, of England, located at Stoke-on-Trent, have set up a large plant at Milton, where, profiting by the experience of the parent concern in America, still larger electric currents are used, these being found more economical. The dynamo in use at this works was built by Crompton, and supplies a current of 5000–6000 ampères at 50 to 60 volts. There are two furnace-rooms, each containing six furnaces, aluminium and silicon bronze being produced in one room, and ferro-aluminium in the other. The furnaces used measure 60 by 20 by 36 inches, inside dimensions, and differ from those previously shown by having the electrodes inclined at an angle of about 30°. (See Figs. 33, 34). The electrodes

FIG. 34.

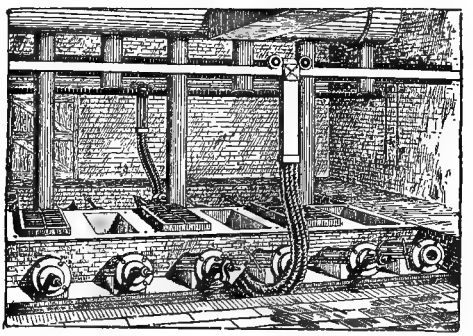

COWLES' ELECTRIC SMELTING FURNACES AT STOKE-ON-TRENT, ENGLAND.

used are formed by bundling together 9 carbon rods, each 2¼ inches in diameter, each electrode weighing 20 lbs. More recently larger carbons have been obtained, 3 inches in diameter, and an electrode formed of five of these weighs 36 lbs. The furnace is charged as previously described.

The current is started at 3000 ampères, gradually increasing to 5000 during the first half hour, and then keeping steady until the run is ended, which is about one and a half hours from starting. The product of each run is about 100 lbs. of raw bronze containing 15 to 20 per cent. of aluminium. The return is said to average 1 lb. of contained aluminium per 18

electric horse-power hours, or 1⅓ lbs. per electric horse-power per day. The works produce about 200 lbs. of aluminium contained in alloys per day. The raw bronze is stacked until several runs have accumulated, then a large batch is melted at once in a reverberatory furnace, refined and diluted to the proportion of aluminium required by adding pure copper.

The Cowles Company, both in England and America, produce six standard grades of bronze as follows:

"Special" A	11	per cent.	of aluminium.
A	10	"	"
B	7½	"	"
C	5–5½	"	"
D	2½	"	"
E	1¼	"	"

Their ferro-aluminium is sold with usually 5 to 7 per cent. of aluminium, but 10, 13, and 15 per cent. is furnished if asked for.

Products of the Cowles furnace.—Dr. W. Hampe obtained the following results on analyzing a sample of Cowles Bros.' 10 per cent. bronze:

Copper	90.058
Aluminium	8.236
Silicon	1.596
Carbon	0.104
Magnesium	0.019
Iron	trace.
	100.013

A sample of 10 per cent. bronze, made in the early part of 1886, and analyzed in the laboratory of the Stevens Institute, showed—

Copper	88.0
Aluminium	6.3
Silicon	6.5

but it is evident that the percentage of silicon has since then been lowered.

The ferro-aluminium used by Mr. Keep in his tests on cast-iron was furnished by the Cowles Company, and analyzed—

Aluminium	11.42
Silicon	3.86

A sample shipped to England in December, 1886, contained—

Iron		86.69
Combined carbon	1.01	
Graphitic carbon	1.91	
Total	—	2.92
Silicon		2.40
Manganese		0.31
Aluminium		6.50
Copper		1.05
Sulphur		0.00
Phosphorus		0.13
		100.00

The copper in this alloy was present by accident, the alloy regularly made containing none, but the rest of the analysis gives a correct idea of the constitution of the alloy. Prof. Mabery gives several analyses of Cowles' ferro-aluminium:—*

Iron	85.17	85.46	86.04	86.00	84.00
Aluminium	8.02	8.65	9.00	9.25	10.50
Silicon	2.36	2.20	2.52	2.35	2.40
Carbon		3.77		2.41	2.50

The slags formed in the furnace in producing this alloy were analyzed as follows:—

Silica	0.78	4.10
Alumina (insoluble)	0.20	—
Lime	28.50	14.00
Iron	1.50	29.16
Alumina (soluble) + aluminium	38.00	48.70
Sulphur	0.50	—
Graphite	5.00	2.60
Combined carbon	0.90	0.48

The slags formed when producing bronze vary in composition,

* American Chemical Journal, 1887, p. 11.

and are usually crystalline, with a shining, vitreous lustre. Their analysis shows—

Alumina (insoluble)	55.30	66.84	—
Alumina (soluble) + aluminium	21.80	14.20	—
Lime	3.70	1.44	6.77
Copper	—	3.32	1.00
Carbon	0.65		

The lime present probably existed as calcium aluminate. These slags contained only a small amount of aluminium, rarely any iron, and were usually free from silica.

The same chemist analyzed a peculiar product sometimes formed in the furnace when smelting for bronze, in the shape of crystalline masses, steel-gray to bright yellow in color, semi-transparent and with a resinous lustre. These all contained aluminium, copper, silicon and calcium in various proportions, and when exposed to the air fell to powder. Analyses gave

Copper	26.70	35.00	20.00	—
Aluminium	66.20	53.30	74.32	15.23
Silicon	5.00	12.30	2.86	20.55
Calcium	2.00	0.20	2.86	—
Tin	—	—	—	49.26
	99.90	100.80	100.04	85.04

The latter product was formed in smelting for aluminium-tin.

Prof. Mabery also found that the soot collecting at the orifices on top of the furnace contained 10 to 12 per cent. of aluminium; also that when alumina and carbon alone were heated and silica was present, the aluminium formed dissolved up to 10 per cent. of silicon, which, on dissolving the aluminium in hydrochloric acid, was left as crystalline or graphitic silicon.

Reactions in Cowles' process.—The inventors, themselves, claim "reduction in a furnace heated by electricity in presence of carbon and a metal." In their first pamphlet they say that "the Cowles process accomplishes the reduction of alumina by carbon and heat." Professor Mabery and Dr. Hunt, already

quoted, and Dr. Kosman * look at the process in no other light than that the electric current is utilized simply by its conversion into heat by the resistance offered, and that pure electrolysis is either absent or occurs to so small an extent as to be inappreciable. Indeed, if we consider the arrangement of the parts in the Cowles furnace we see every effort made to oppose a uniform, high resistance to the passage of the current and so convert its energy into heat, and an entire absence of any of the usual arrangements for electrolysis. For instance, electrolysis requires a fluid bath in circulation, so that each element of the electrolyte may be continuously liberated at one of the poles and the presence of any foreign material, as bits of carbon, between the poles is to be avoided if possible, since they short-circuit the current and hinder electrolysis proper. I think the arrangement of the furnace shows no attempt to fulfil any of the usual conditions for electrolysis, but is one of the best arrangements for converting the energy of the current entirely into heat. Dr. Hampe, however, in spite of these evident facts, draws the conclusion that because he was unable to reduce alumina by carbon in presence of copper at the temperature of a Deville lime-furnace, that it was therefore to be assumed that even the somewhat higher temperature of the electric furnace alone would be insufficient to accomplish the desired reaction, and hence the effect of the electric arc must be not only electro-thermic in supplying heat, but afterwards electrolytic, in decomposing the fused alumina.

If we figure out the useful effect of the current, *i. e.*, the proportion of its energy utilized for the purpose of reducing alumina, we find a low figure; but it is well to note that although the power required is one of the main features of this way of reduction, yet this item is so cheap at the firm's works that it becomes a secondary consideration in the economy of the process. A 300 horse-power current is equivalent to an expenditure of $\frac{300 \times 270000}{424} = 191000$ calories of heat per hour. Theoretically,

* Stahl und Eisen, Jan. 1889.

this amount of heat would produce $\frac{191000}{7250} = 26\frac{1}{3}$ kilos or 58 pounds of aluminium. However, about 7 pounds are obtained in an hour's working, which would show a useful effect of 12 per cent. This should even be diminished, since no account has been taken of the combustion of carbon in the furnace to carbonic oxide. The remainder of the heat account, probably 90 per cent. of the whole, is partly accounted for by the heat contained in the gases escaping and the materials withdrawn from the furnace (of which no resonable estimate can be made, since the question of temperatures is so uncertain) and the large remainder must be put down as lost by radiation and conduction. As before remarked, water power is obtained by this company very cheaply, and even this large loss does not make much show in the cost of the alloy, yet the figures show that a much larger useful effect should be possible, and it is not at all improbable that the prospect of getting double or triple the present output from the same plant is at present inciting the managers to fresh exertions in utilizing the power to better advantage.

Mr. H. T. Dagger's paper* on the Cowles process in England, states that the product at their Milton works is 1 lb. of aluminium to 18 electric horse-power per hour, which would show that the dissociation of the alumina represented nearly 30 per cent. of the energy of the current; but the data given in the body of this gentleman's paper (p. 303) do not seem to indicate so large a return as is stated above. Mr. Dagger, moreover, maintains the purely electro-thermic action of the current, denying that any electrolysis takes place at all, citing an experiment with the alternating current in one of these furnaces, which produced as much aluminium per horse-power as did the direct current. In such an experiment electrolysis must necessarily be absent.

In the discussion of Heroult's alloy process it will be shown that in both it and Cowles' process the largest part of the re-

* British Association for Advancement of Science, Newcastle, 1889.

duction must necessarily be performed by chemical and not by electrolytic action. I do not introduce this discussion here, since the two processes resemble each other so closely in the reaction involved that they can best be considered together.

Since 1892 no aluminium has been made in England by this process, as the low price of pure aluminium killed the market for ready-made aluminium alloys. I cannot say exactly to what extent the Lockport works is running at the present time, but it is probable that the death of one of the Cowles brothers in 1893 and the sharp competition from pure aluminium have seriously hampered the business of the American company. At least, their products are not frequently seen on the market.

It may be proper to interject here mention of an unfortunate occurrence in the history of the Cowles Company. They sold only aluminium alloys until January, 1891, when they began to advertise and sell pure aluminium made, it was said, by a new process. The Pittsburgh Reduction Company working the Hall process were then selling pure aluminium as low as $1.50 per pound, while the Cowles Company commenced selling as cheap as $1.00. Inside of two months the Pittsburgh Reduction Company instituted suit for infringement of the Hall patents, asking the courts meanwhile for a preliminary injunction. Judge Ricks, of Ohio, denied a complete injunction, but restrained the defendants from increasing the output of their plant during the trial of the suit, or from selling aluminium below a price to be named by the complainants. The latter named $1.50 per pound, and this fixed the market price for some months. Several metallurgical experts of wide reputation were engaged by both sides, and very voluminous testimony was taken. While the suit was pending, the price of aluminium was reduced by the European makers to 5 marks a kilo (56 cents a pound), at which price important quantities began to be imported, and the domestic makers could sell very little at $1.50. In consequence, the Pittsburgh Reduction Company notified the court that it would sell as low as $0.50 per pound. At this price, which was very nearly the cost of

production, aluminium continued until the suit was finally decided, in February, 1893, in favor of the Hall process. Judges Taft and Ricks decided that the Cowles Company were using the Hall process when they electrolyzed a bath of molten cryolite in which alumina was dissolved, and they were ordered to stop the infringement and to pay the damages which it might be estimated that their infringement had caused the complainants' business.

Menges' Patent.

* This inventor proposes to produce aluminium or aluminium bronze by mixing aluminous material with suitable conducting material, such as coal, and a cohesive material, then pressing into cylinders and baking hard. These strong, compact bars conduct electricity, and are to be used like the carbon electrodes of electric lamps in a suitably inclosed space.

Farmer's Patent.

M. G. Farmer † mixes aluminous material with molasses or pitch, making a paste which is moulded into sticks, burned, and used as electrodes, inclosed in a furnace. Aluminium is produced by the arc, and drops into a crucible placed immediately beneath.

Several other persons have patented exactly the same method of procedure as that indicated by Menges and Farmer, with the modification in some cases of mixing iron or copper turnings with the aluminous material, and having the melted material drop into a furnace kept hot by burning ordinary fuel. Such a method of reducing refractory ores was even suggested as far back as 1853. None of such processes are likely to give results sufficiently economical for commercial use.

Kleiner's Process (1886).

This was devised by Dr. Ed. Kleiner of Zurich, Switzerland,

* German Patent, 40354 (1887).

† English Patent, 10815, Aug. 6, 1887.

and was patented in most of the European States. The English patent is dated 1886.* The first attempts to operate it were at the Rhine Falls, Schaffhausen, and were promising enough to induce Messrs. J. G. Nethers, Sons & Co., proprietors of an iron works there, to try to obtain water rights for 1500 horse power, announcing that a company (the Kleiner Gesellschaft) with a capital of 12,000,000 francs, was prepared to undertake the enterprise and build large works. The proposition is said to have met with strong opposition from the hotel-keepers and those interested in the falls as an attraction for tourists, and the government declined the grant, considering that the picturesqueness of the falls would be seriously affected. This is the reason given by those interested in the process for its not being carried out in Switzerland, it being then determined to start a works in some part of England where cheap coal could be obtained, and test the process on a large scale. A small experimental plant was then set up in the early part of 1887 on Farrington Road, London, where it was inspected by many scientific men, among them Dr. John Hopkinson, F. R. S., who reported on the quantitative results obtained; a description of the process as here operated was also written up for "Engineering." With the co-operation of Major Ricarde-Seaver a larger plant was put up at Hope Mills, Tydesley, in Lancashire, where the process was inspected and reported on by Dr. George Gore, the electrician. After his report we learn that the patents were acquired by the Aluminium Syndicate, Limited, of London, a combination of capitalists among whom are said to be the Rothschilds.

The aluminium compound used is commercial cryolite. It is stated that the native mineral from Greenland contains on an average, according to Dr. Kleiner's analysis, 96 per cent. of pure cryolite, the remainder being moisture, silica, oxides of iron and manganese. As pure cryolite contains 13 per cent. of aluminium, the native mineral will contain 12½ per cent.,

* English Patents, 8531, June 29, 1886, and 15322, Nov. 24, 1886.

all of which Dr. Kleiner claims to be able to extract. It is further remarked that as soon as sufficient demand arises, an artificial cryolite can be made at much less cost than that of the native mineral, which now sells at £18 to £20 a ton. The rationale of the process consists in applying the electric current in such a way that a small quantity of it generates heat and keeps the electrolyte in fusion, while the larger quantity acts electrolytically. Dry, powdered cryolite is packed around and between carbon electrodes in a bauxite-lined iron crucible; on

FIG. 35.

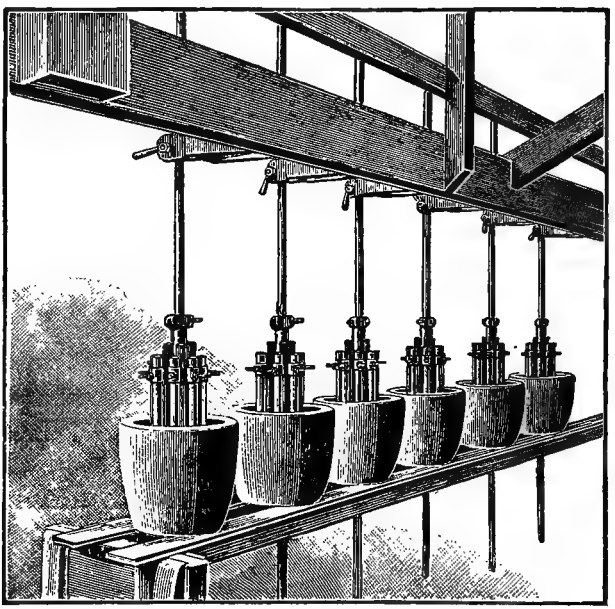

passing a current of high tension (80 to 100 volts) through the electrodes, the cryolite is quickly fused by the heat of the arc and becomes a conductor. As soon as the electrolyte is in good fusion the tension is lowered to 50 volts, the quantity being about 150 ampères, the arc ceases and the decomposition proceeds regularly for two or three hours until the bath is

nearly exhausted. The evolved fluorine is said to attack the bauxite, and by thus supplying aluminium to the bath extends the time of an operation. In the first patent the negative carbon was inserted through the bottom of the melting cavity, the positive dipping into the bath from above, (Fig. 35) but it was found that while the ends of the positive carbon immersed in the cryolite were unattacked, the part immediately over the bath was rapidly corroded. In the second patent, therefore, the positive electrode was circular and entirely immersed in the cryolite, connection being made by ears which projected through the side of the vessel. (Fig. 36.) As the carbons

FIG. 36.

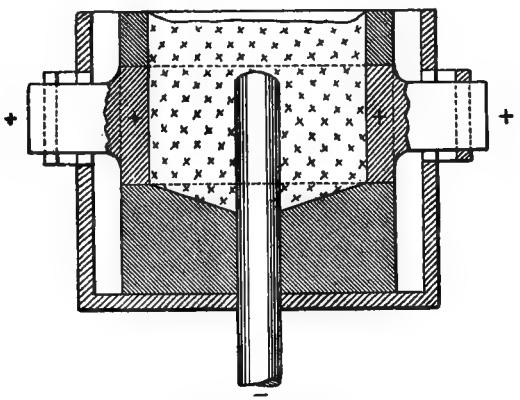

are thus fixed, the preliminary fusion is accomplished by a movable carbon rod suspended from above, passing through the circular anode and used only for this purpose. The bath being well fused and the current flowing freely between the fixed carbons, the rod is withdrawn. The carbons are said to be thus perfectly protected from corrosion, and able to serve almost indefinitely. The melting pots finally used were ordinary black-lead crucibles, which are not usually injured at all, since the fused part of the cryolite does not touch them, and they last as many as 300 fusions. After the operation, the carbons are lifted out of the bath and the contents cooled.

When solid, the crucibles are inverted and the contents fall out. This residue is broken to coarse powder, the nodules of aluminium picked out, melted in a crucible and cast into bars. The coarse powder is then ground to fine dust. This powder is more or less alkaline and contains a greater or less excess of fluoride of sodium in proportion to the amount of aluminium which has been taken out. If only a small proportion of the metal has been extracted and the powder contains only a small excess of sodium fluoride, it is used again without any preparation in charging the crucibles; but if as much as 5 or 6 per cent. of aluminium has been removed and the powder, therefore, contains a large excess of sodium fluoride, it is washed with water for a long time to remove that salt, which slowly dissolves. The solution is reserved, while the powder remaining is unchanged cryolite, and is used over. Dr. Gore states that if the powder, electrodes and crucible are perfectly dry, there is no escape of gas or vapor during the process; but if moisture is present, a small amount only of fumes of hydrofluoric acid appear, and that there is no escape of fluorine gas at any time. Dr. Kleiner hopes to soon dispense with the interruption of the process, washing, etc., by regenerating cryolite in the crucible itself and so making the process continuous. One of the great advantages claimed is that the aluminium is obtained in nodules, and not in fine powder; if it was, it could not all be collected because it is so light, some of it would float upon the water during the washing process and be lost, and even when collected it could not be dried and melted without considerable loss.

It has been found impossible in practice to obtain all the aluminium from a given quantity of cryolite in less than two fusions, for the sodium fluoride collecting in the bath hinders the production of the metal. The proportion extracted by a single fusion depends upon its duration. In the operations at Tydesley, a fusion lasting 24 hours separated only 2½ per cent. of aluminium, whereas the cryolite contained 12½ per cent. At this rate, to extract the whole in two operations would

require two fusions of 60 hours each. As to the output, on an average a current of 38 electric horse-power deposited 150 grammes of aluminium per hour, being a little over 3 grammes per horse-power. Since a current of 50 volts and 150 ampères, such as was stated above as the current in each pot, is equal to $\frac{50 \times 150}{750}$ or 10 electric H. P., it is probable that the 38 H. P. current mentioned must have been used for four crucibles. Now, the output of four crucibles, each with a current of 150 ampères, should have been $0.00009135 \times 150 \times 4 = 0.0548$ gramme per second, or 197.3 grammes per hour; the difference between this and the amount actually obtained, or 47.3 grammes, is the amount of aluminium which was produced and then afterwards lost either as fine shot-metal or powder, or dissolved again by corroding elements in the bath. To calculate how the output of 3 grammes per electric H. P. per hour compares with the quantity of metal which this amount of energy should be able to produce, we can assume that since it takes at most 4 volts to decompose the aluminium fluoride, the four crucibles would consume 16 volts in decomposition, being sixteen-fiftieths of the total voltage employed. Since the ampères only produced 150 grammes out of 197.3 theoretically possible, the efficiency over all is only

$$\frac{16}{50} \times \frac{150}{197.3} = \frac{1}{4} \text{ nearly.}$$

As to the purity of the metal obtained, the process is met at the outset by the silica and iron oxide in the cryolite, which are probably all reduced with the first few grammes of aluminium thrown down. This can possibly be remedied by using a purer artificial cryolite; the impurities cannot generally be separated from the natural mineral. Then there are impurities of a similar nature coming from the carbons used, and which are generally present if especial pains are not taken to get very pure materials for making them. Dr. Kleiner's early attempts produced metal of 85 to 95 per cent. purity, but he stated in 1889 that it was uniformly 95 to 98 per cent., and being put on the market in

competition with other commercial brands. It appears, however, from a consideration of the preceding data, that the process could not produce aluminium much cheaper than 12 shillings a pound, and it was therefore abandoned in 1890. It may be observed that the mechanical arrangements for carrying on this process, as above outlined, could not stand comparison with the present forms of apparatus in use by the Hall and Heroult processes.

Lossier's Method.

* This is a device for decomposing the natural silicates by electricity and obtaining their aluminium. The bath is composed of pure aluminium fluoride or of a mixture of this salt and an alkaline chloride, and is kept molten in a round bottomed crucible placed in a furnace. The electrodes are of dense carbon and are separated in the crucible by a partition reaching beneath the surface of the bath. The positive electrode is furnished with a jacket or thick coating of some aluminium silicate plastered on moist and well dried before use. When the current is passed, the aluminium fluoride yields up its fluorine at this pole and its aluminium at the other. The fluorine combines with the aluminium silicate, forming on the one hand aluminium fluoride, which regenerates the bath, on the other silicon fluoride and carbonic oxide, which escape as gases. The metal liberated at the negative pole is lighter than the fused bath, and therefore rises to the surface.

M. Grabau cites as one of the recommendations of aluminium fluoride for use in his process (p. 295), that it is quite infusible, so it would appear that Lossier has made a mistake in supposing that it could be melted alone in a crucible. It would, however, make a very fusible bath when the alkali chloride was added. It is probable that the carrying out of this method would develop great trouble from the attacking of the crucible by the very corrosive bath, the disintegration of the carbons, which would cause much trouble at the negative pole especially,

* German Patent (D. R. P.), No. 31089.

and the oxidation of the fluid aluminium on the surface of the bath. The process has never been attempted on a large scale, and it is very unlikely that it ever will be.

Omholt's Furnace.

I. Omholt and the firm Böttiger and Seidler, of Gössnitz, have patented the following apparatus for the continuous electrolysis of aluminium chloride:*—

The bed of a reverberatory furnace is divided by transverse partitions into two compartments, in each of which are two retorts semi-circular in section, lying side by side horizontally across the furnace, with the circular part up. They are supported on refractory pillars so that their open side is a small distance above the floor of the furnace. The aluminium compound being melted on the hearth, it stands to the same depth in both retorts, and if the electrodes are passed through the bottom of the hearth they may remain entirely submerged in molten salt and each under its own retort cover. The metal therefore collects in a liquid state under one retort and the chlorine under the other, both being preserved from contact or mixture with the furnace gases by the lock of molten salt. The chlorine can thus be led away by a pipe, and utilized, while the aluminium collects without loss, and is removed at convenient intervals.

The great cost of making aluminium chloride will probably prevent it ever being used again in the metallurgy of aluminium, but the form of furnace described above may possibly be utilized in operating the decomposition of some other aluminium salt, such as the double sulphide with soda.

Minet's Process (1887).

This consists, according to the patent specification,† in the electrolysis of a mixture of sodium chloride with aluminium fluoride or with the separate or double fluorides of aluminium

* German Patent (D. R. P.), No. 34728.

† English Patent, No. 10057, July 18, 1887.

and sodium, melted in a non-metallic crucible or in a metallic one inclosed in a thin refractory jacket to avoid filtration, the aluminium fluoride decomposed being regenerated by causing the fluorine vapors evolved to act on bauxite or alumina placed somewhere about the anode. The details of the apparatus and bath are as follows:—

Disposition of the Apparatus.—The pots or crucibles used may be of refractory earth, plumbago, or of metal, and in cases where an alloy is required the crucible itself serves as an electrode. None of these, however, resist the corrosive power of the electrolyte and would under ordinary conditions be quickly destroyed. To overcome this difficulty two special devices are employed. When alloys are to be made directly, the pot is cast of the metal with which the aluminium is to be combined. It is shaped with a sloping bottom and provided with a tap hole. The pot is encased in thin brickwork and is then made the negative electrode, the positive being two carbon rods dipped into the bath. As soon as the current is passed aluminium is deposited on the walls of the pot, forming a rich alloy with the metal of which the pot is made (iron or copper). When this coating becomes sufficiently rich in aluminium, the heat of the bath melts it and it trickles down and collects at the bottom. After a certain time, the alloy can be tapped out regularly at intervals without interrupting the electrolysis. The metal thus obtained is principally aluminium containing a few per cent. of the metal of the pot, which is of no consequence, since the end to be finally attained is the production of an alloy with a smaller quantity of aluminium. When pure aluminium is to be obtained, an ingenious device is used to protect the metal from contamination by the metal of the pot. Carbon plates, *A* and *C* (Fig. 37), serve as anode and cathode, the cathode standing upright in a small crucible placed upon a plate resting on the bottom of the pot. This crucible and plate are made from carbon blocks or from fused alumina or fluorspar moulded into the shape desired. As the metal is set free it trickles down the cathode and is caught in the crucible or cup, thus being

prevented from spreading out over the bottom of the pot. To prevent the bath from corroding the pot, the wire *R* is passed from the latter to the negative pole of the circuit. The pot is thus made part of the negative electrode, but it is not intended that much of the current should pass through it, so a resistance coil is interposed between it and the battery or dynamo, so that

FIG. 37.

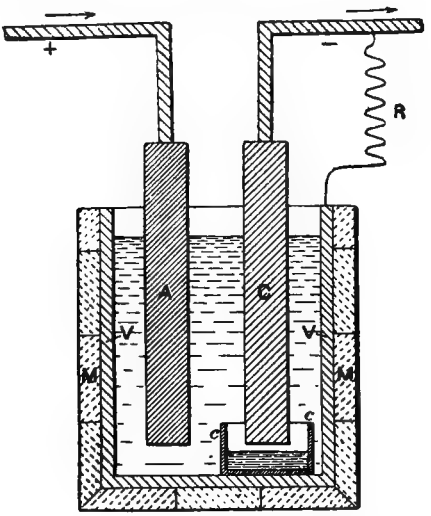

the derived current passing through the sides of the pot is only 5 to 10 per cent. of the whole current. The effect of this is that a small amount of aluminium is deposited on and alloys with the sides of the vessel, which protects the latter from corrosion and is only feebly acted upon by the bath. The metal deposited in the crucible is thus kept nearly pure, while a small amount of alloy falls to the bottom of the pot and is poured out after the crucible has been removed. When it is wished to obtain the purest aluminium, the intensity of the derived current passing through the pot is increased by removing part of the resistance interposed between it and the negative wire, thus also decreasing the intensity of the principal current. The

nature of the electrodes proper may be varied. For producing pure aluminium the anode is carbon, the cathode carbon, and the pot either of copper or iron; for producing copper alloys the anode may be either carbon or bright copper, and the cathode (pot) of carbon or copper; for producing iron alloys the anode may be either carbon or iron, while the vessel used as cathode is either of cast-iron or plumbago.

Composition and properties of the baths.—Minet has made more careful electrical measurements on these fused baths than any other metallurgist, a point of particular importance in his experiments being the accurate measurement of the temperatures by means of a Le Chatellier electric pyrometer. On this account his results are a valuable contribution to the knowledge of the present electrolytic processes, and are therefore worth repeating *in extenso*. Minet first experimented with a bath of

Aluminium-sodium chloride	40 parts.
Sodium chloride	60 "

He says of the working of this mixture that it gives rise to abundant vapors, which are very disagreeable. In consequence, the bath becomes quickly impoverished in aluminium chloride, it becomes pasty, and can only be liquefied by raising the temperature almost to the melting point of sodium chloride. It is difficult under these conditions to produce regular and continuous electrolysis.

Minet obtained much better results with aluminium fluoride. He mixed cryolite with common salt in the following proportions:

Cryolite	37.5 parts.
Sodium chloride	62.5 "

giving a mixture whose formula would be $AlF_3 3NaF + 6NaCl$. This mixture has the following properties:

Melting point	675° C.
Vapors given off at	1056° C.
Specific gravity at 829° C	1.76
Specific resistance at 870° C	0.32 ohms.

The last datum means that a column of the electrolyte 1 centimetre square and 1 centimetre long would give 0.32 ohms resistance to the passage of the current. If the section of the electrolyte through which the current passed averaged 750 square centimetres, and the electrodes averaged 6 centimetres apart, the total resistance of the bath would be

$$0.32 \times \frac{6}{750} = 0.0026 \text{ ohms}:$$

and if the current was 1500 ampères, the voltage absorbed by the electrical conduction-resistance of the bath would be

$$0.0026 \times 1500 = 3.9 \text{ volts.}$$

The specific resistance was found to decrease about 0.07 per cent. for every degree rise of temperature above 870°, or 7 per cent. for every 100 degrees.

If this bath were simply electrolyzed, fluorine would be disengaged, escaping into the air as carbon fluoride, CF_4, while the bath would become poorer in aluminium fluoride. If cryolite alone were added during the process, sodium fluoride would accumulate in the bath, and after a certain time sodium would be set free. If the bath is renewed by adding aluminium fluoride, this inconvenience is obviated, but there still remains the question of suppressing the noxious fluoride vapors set free. If the bath is renewed by placing alumina in the state of fine powder in the bath, dropping it especially around the anode, the fluorine set free may reform aluminium fluoride by attacking the alumina, setting free oxygen, which combines with the carbon anode to form carbonic oxide. If the fluorine were not completely absorbed by the alumina, the amount escaping would have to be made up for by adding aluminium fluoride to the bath. The bath should therefore be fed by both alumina and aluminium fluoride.

The above contains Minet's views of what takes place when alumina is added to the fluoride bath. He does not admit that any alumina can be really dissolved in the bath and be electro-

lyzed as alumina (the view taken by Hall). Minet, in fact, maintains that when alumina is added to molten cryolite it sinks through it and remains undissolved, as, for instance, very fine marble dust would in water. Such, however, is not the experience of other investigators. According to numerous experiments by Hall and others using the present electrolytic processes, as well as some made by the writer, finely-divided alumina appears to dissolve in molten cryolite exactly as sugar does in water, and there is even a saturation point, at about 30 per cent., above which no more dissolves. The bath containing alumina forms to all appearances a homogeneous liquid. Driven from their first position, the adherents to Minet's views, having allowed that a homogeneous liquid bath does result, assert that the alumina is only mechanically suspended, like clay in muddy water, and that in this condition it is carried to the anode and unites with the fluorine set free. Such a view, however, is also erroneous, because regeneration in such a manner could not be anything like complete, and considerable amounts of fluorine would escape; yet in the Hall process, when the operation is properly conducted, not a trace of fluoride gas escapes. Regeneration by mechanically-suspended alumina could not possibly be so complete.

We shall continue describing Minet's experiments, asking that it be remembered, however, that we regard as erroneous his view that aluminium fluoride is the substance immediately decomposed by the current when alumina is present.

Taking the bath already described, with electrodes of such size and distance apart that the conduction-resistance at 900° was 0.0044 ohms, the following results were obtained:—

Temperature.	Electromotive force for decomposition.	Conduction-resistance of the bath.
900°	2.4 volts	.0044 ohms
1000°	2.34 "	.0033 "
1100°	2.17 "	.0025 "

If V^d = the voltage required for decomposition,
V^c = the voltage required for conduction,
V = the total voltage absorbed by the bath,
A = the ampèrage of the current.

then $[V = V^d + AV^c.]$

We can thus calculate the voltage required to send through this bath any number of ampères at a given temperature. Thus, for 100 or 1000 ampères the voltage absorbed per bath would be as follows:

Temperature.	Ampères.	Voltage for decomposition.	Voltage for conduction resistance.	Total voltage.	Per cent. of total voltage absorbed in conduction resistance.
900°	100	2.4	0.44	2.88	15
	1000	2.4	4.40	6.80	65
1000°	100	2.34	0.33	2.67	12
	1000	2.34	3.30	5.64	59
1100°	100	2.17	0.25	2.42	13
	1000	2.17	2.50	4.67	54

It thus appears that, using a bath of a given size, the voltage required to send 1000 ampères through it is only 2 to 2.5 times that required for 100 ampères. Since the power required is just in the same ratio, it follows that it is economical to send as large a current as practicable through a bath of a given size. The last column shows us the percentage of the energy of the current which will be converted into heat. It follows from these figures that the heating effect of the current increases very rapidly with its quantity, so that a given number of ampères will supply enough heat to keep the bath molten without exterior heat; more than this number would, in fact, raise the temperature of the bath too high, and this limits the size of the current which it is practicable to send through a bath of a given size.

Minet also found that when such a bath contained salts of iron and silicon, which are weaker compounds than aluminium or sodium salts, a current of carefully regulated low voltage, and consequently of low density, would first separate these completely. An experiment made with a bath in which the anode surface was 500 square centimetres, and gradually increasing the voltage, gave the following successive results:

Total voltage used.	Ampères passing.	Ampères per sq. c. m. of anode.	Electro-motive force of decomposition (volts).	Nature of the metal deposited.
1.21	75	0.15	0.54	Iron.
1.68	100	0.20	0.75	Iron (traces of silicon).
2.48	125	0.25	1.37	Ferro-silicon.
2.89	150	0.30	1.54	Ferro-silicon (traces of aluminium).
2.94	150	0.30	1.74	Silicon-aluminium (traces of iron).
4.27	250	0.50	2.15	Aluminium (traces of silicon).
6.85	500	1.00	2.50	Aluminium (traces of sodium).

The conduction-resistance of the bath remained very nearly constant throughout.

In a large number of experiments, the amount of metal actually obtained was 50 to 80 per cent. of the amount which the ampèrage of the current could theoretically produce, on an average about 60 per cent. As for the power required, an experiment lasting 24 hours, at a temperature of 1100°, voltage 5.75, and ampères 1500, showed 21.5 grammes of aluminium deposited per hour per electric horse-power used. Another similar experiment, but with the electrodes closer together, the voltage consequently less, and at a lower temperature, gave 31.9 grammes per horse-power-hour, which would be 0.765 kilos (1.685 pounds) per electric horse-power per day. As the energy of one horse-power-day is equivalent to the energy of oxidation of 2.1 kilos (4.63 pounds) of aluminium, the useful effect over all is 36.5 per cent.

Quality of metal.—When working for pure aluminium, about three-fourths of the metal produced is taken from the crucible in which the cathode stands, and is 98 to 99 per cent. pure; the other one-fourth has been deposited on the sides of the cast-iron pot, and contains 10 to 20 per cent. of iron. It is poured out and used for making ferro-aluminium.

Installations of the process.—Minet conducted his work at the expense of Messrs. Bernard Bros. The first experiments were made on the road Moulin Joli, in Paris, from March, 1887, to March, 1888. This plant consisted of a 6 horse-power engine and a Gramme dynamo capable of giving a current of 250 ampères at 12 volts tension. In the year named, this plant pro-

duced about 500 kilogrammes of pure aluminium and 1500 kilogrammes of ferro-aluminium or aluminium bronze.

The second installation was put up at Creil (Oise), commenced operations in April, 1888, and continued working until October, 1891. This plant had a 40 horse-power engine, and an Edison dynamo giving a current of 1200 ampères and 27.5 volts. Regularly it was run at only 16 volts, operating three baths in tension, and at 1000 ampères. There were made here daily about 10 kilos of pure aluminium and 5 to 6 kilos of aluminium in alloys.

At the first location, Minet was enabled to study experimentally the purely scientific part of his processes; the plant at Creil enabled him to solve the practical details of the process. In 1889, the Messrs. Bernard Bros. determined to work the process on a large, industrial scale, and cast around for a location having abundant water-power. It was decided to locate at Saint Michel in Savoy. The stream utilized is the Valoirette, giving a volume of 3.5 cubic metres per second with a fall of 133 metres. This gives theoretically 6000 horse-power, and should produce 4000 electric horse-power.

At this place were put up a turbine of 300 horse-power by Bouvier of Grenoble, and a dynamo of 275 horse-power by Hillairet-Huguet of Paris. The latter gives a current of 4000 ampères at 50 volts tension, and produces regularly about 150 kilos (330 pounds) of aluminium. It is stated that a 600 horse-power dynamo, actuated by a 1000 horse-power turbine, was started during 1894. Latest advices state that this establishment has been acquired by a French company formed to work under the Hall patents.

Feldman's Method (1887).

A. Feldman, of Linden, Hannover, patented the following electrolytic process:*—

A double fluoride of aluminium and an alkaline earth metal,

* English Patent, No. 12575, Sept. 16, 1887.

mixed with an excess of a chloride of the latter group, is either electrolyzed or reduced by sodium. The proportions of these substances to be used are such as take place in the following reactions:—

1. $(Al_2F_6+2SrF_2)+6SrCl_2=2Al+5SrF_2+3SrCl_2+6Cl.$
2. $(Al_2F_6+2SrF_2)+6SrCl_2+6Na=2Al+5SrF_2+3SrCl_2+6NaCl.$

The three equivalents of strontium chloride are found in practice to be most suitable. Potassium chloride may also be added to increase the fluidity, but in this case the strontium chloride must be in still greater excess.

Even if the above reactions and transpositions do take place, the use of so much costly strontium salts would appear to render the process uneconomical.

Warren's Experiments (1887).

Mr. H. Warren, of the Everton Research Laboratory, has outlined the following methods or suggestions, some of which had already been carried out, and probably others have since given useful ideas to workers in this line. The principle can hardly be called new, since suggestions almost identical with Mr. Warren's were made previously to his, but the latter's results are the first recorded in this particular direction:* "This method of preparing alloys differs only slightly from the manner in which amalgams of different metals are prepared, substituting for mercury the metals iron, copper, or zinc made liquid by heat. These metals are melted, connected with the negative pole of a battery, and the positive pole immersed in a bath of molten salt floating on top of the melted metal. The apparatus used is a deep, conical crucible, through the bottom of which is inserted a graphite rod, projecting about one inch within, the part outside being protected by an iron tube coated with borax. As an example of the method, to prepare silicon bronze, copper is melted in the crucible, a bath of potassium silico-fluoride is

* Chemical News, Oct. 7, 1887.

fused on top to a depth of about two inches. A thick platinum wire dips into this salt, and on passing the electric current an instantaneous action is seen, dense white vapors are evolved, and all the silicon, as it is produced, unites with the copper, forming a brittle alloy. Cryolite may be decomposed in like manner if melted over zinc, forming an alloy of zinc and aluminium, from which the zinc can be distilled, leaving pure aluminium."

Mr. Warren does not affirm that he has actually performed the decomposition of cryolite in the way recommended, but states that it *may* be done; from which we would infer that he simply supposed it could. A well-recorded experiment, then, is needed to establish the truth of this statement. Neither does he propose to make aluminium bronze in this way; it may be that it was attempted and did not succeed, for Hampe states that an experiment thus conducted did not furnish him aluminium bronze (p. 368).

Zdziarski's Patent.

A. Zdziarski,* of Brest-Litowsk, Russia, appears to have patented the above principle in 1884, for in his patent he states that the metal to be alloyed with aluminium is melted in a crucible, covered with a fusible compound of aluminium for a flux (alumina and potassium carbonate may be used) and made the negative pole of an electric current, the positive pole being a carbon rod dipping in the flux.

Grabau's Apparatus.

Ludwig Grabau,† of Hannover, Germany, proposes to electrolyze a molten bath of cryolite mixed with sodium chloride. The features of the apparatus used are an iron pot, in which the bath is melted, and water-cooled cylinders surrounding both electrodes, the jacket surrounding the negative one having a

* English Patent 3090, Feb. 11, 1884.

† German Patent (D. R. P.), No. 45012.

bottom, the other not. The object of these cylinders is, at the positive electrode, to keep the liberated fluorine from attacking the iron pot and so contaminating the bath, at the other pole the liberated aluminium is kept from dropping to the bottom of the pot, where it might take up iron, and can be removed from the bath by simply lifting out the water-cooled cylinders and carbon electrode. Mr. Grabau states that he has abandoned this process because the inseparable impurities in the cryolite produced impurities in the metal; it may be that with the pure artificial cryolite, which he makes by his other processes (see p. 171), this electrolytic process may again be taken up. (See also p. 294.)

Rogers' Process (1887).

In July, 1887, the American Aluminium Company, of Milwaukee, was incorporated, with a capital stock of $1,000,000, for the purpose of extracting aluminium by methods devised by Prof. A. J. Rogers, a professor of chemistry in that city. This gentleman had been working at the subject for three or four years previous to that time, but it has not been until recently that patents have been applied for, and they are still pending.

The principle made use of has already been suggested in connection with the production of sodium (p. 219). It is briefly, that if molten sodium chloride is electrolyzed, using a molten lead cathode, a lead-sodium alloy is produced. This alloy is capable of reacting on molten cryolite, setting free aluminium, which does not combine with the lead remaining because of its weak affinity for that metal. If, then, cryolite is placed in the bath with the sodium chloride, the two reactions take place at once, and aluminium is produced. In the early part of 1888, the company erected a small experimental plant, with a ten-horse-power engine, with which the following experiments, among many others, were made:—

1. *A current of 60 to 80 amperes was passed for several

* Proceedings of the Wisconsin Nat. His. Soc., April, 1889.

hours through a bath of cryolite melted in a crucible lined with alumina, and using carbon rods 2¼ inches in diameter as electrodes, one dipping into the bath from above, the other passing through the bottom of the crucible into the bath. Only 1 or 2 grammes of aluminium were obtained, showing that the separated metal was almost all redissolved or reunited with fluorine. With the temperature very high, it was found that sodium passed away from the bath without reducing the cryolite.

2. A current averaging 54 ampères and 10 volts was passed for five and a half hours through a mixture of 1 part cryolite and 5 parts sodium chloride placed in a crucible with 370 grammes of molten lead in the bottom as the cathode. After the experiment, 25 grammes of aluminium were found in globules on top of the lead-sodium alloy. This latter alloy contained some aluminium. The globules were about as pure as ordinary commercial aluminium, and contained no lead or sodium. From another experiment it was determined that the lead-sodium alloy must first acquire a certain richness in sodium before it will part with any of that metal to perform the reduction of the cryolite. It was also found that a certain temperature was necessary in order that aluminium be produced at all.

3. A current of 75 ampères and about 5 volts sufficed to decompose the bath and to produce 105 grammes of aluminium in seven hours. This would be nearly 30 grammes per hour for each electric horse-power.

4. A current of 80 ampères and 24 volts was passed through four crucibles connected in series for six hours, using a bath of 1 part cryolite and 3 parts sodium chloride with 450 grammes of lead in each crucible. The crucibles were heated regularly to a moderate temperature. There were obtained altogether 250 grammes of quite pure aluminium. This would be equal to 16 grammes per electric horse-power-hour.

"A large number of similar experiments afforded a return of ¾ to 1½ lbs. of aluminium per electric horse-power per day.

The experimental plant now in operation consists of a 40 volt —100 ampère—dynamo, the current being sent through six pots connected in series. When the bath is completely electrolyzed the contents of the crucible are tapped off at the bottom and a fresh supply of melted salt poured in quickly. The lead-sodium alloy run off is put back into the crucibles, thus keeping approximately constant in composition and going the rounds continuously. With this apparatus, 3 to 4 lbs. of aluminium are produced regularly per day of 12 hours. As soon as patents are obtained, it is the intention of the company to put up a plant of 50 lbs. daily capacity, which can be easily increased to any extent desired as the business expands."

Professor Rogers observes in regard to the apparatus that he has tried various basic linings for his clay crucibles, but a paste of hydrated alumina, well fired, has succeeded best. Some "shrunk" magnesia lining, such as is used in basic steel furnaces, answered well, but could not be used because of the amount of iron in it. Lime could not be used, as it fluxed readily. The carbon rods lasted 48 hours without much corrosion if protected from the air during electrolysis. Carbon plates and cylinders were tried, but the solid rods gave the best results. About 8 to 10 per cent. of aluminium can be extracted from cryolite containing 12.85 per cent. The mineral used was obtained from the Pennsylvania Salt Company, and was called pure, but it contained 2 per cent. of silica and 1 per cent. of iron. These impurities pass largely into the aluminium produced, but the company hoped to be able to manufacture an artificial aluminium fluoride which will not only be purer but less costly than this commercial cryolite. Professor Rogers infers that pure aluminium fluoride would not be an electrolyte, since the resistance of the bath increases as the amount of other salts present decreases.

It is useless to base any accurate estimation of the cost of aluminium by this process on the data given above, since they were only for a small experimental plant. If, however, 75 per cent. of the aluminium in cryolite can be extracted at the rate

of 1 lb. of metal per day per electric horse-power, and the metal is free from lead and sodium, (a sample sent me was of very fair quality,) it would seem that the process was in a fair way to compete on an equal footing with the other electrolytic processes as operated in 1889, but it has been entirely distanced by more recent developments.

Dr. Hampe on the Electrolysis of Cryolite.

Prof. W. Hampe, of Clausthal, whose name is a guarantee of careful and exact observations, has written the following valuable information on this subject, in presenting which we will also give the remarks of Dr. O. Schmidt, called forth by Hampe's first article.

*"The electrolysis of a bath of cryolite mixed with sodium and potassium chlorides, using a layer of melted copper in the bottom of the crucible as cathode and a carbon rod as anode, gave balls of melted sodium which floated on the surface and burnt, but scarcely a trace of aluminium. Yet here the conditions were most favorable to the production of the bronze. The battery used consisted of twelve large zinc-iron elements."

†Dr. O. Schmidt, referring to this statement of Hampe's, quotes an opposite experience. He fused cryolite and sodium chloride together in a well-brasqued crucible in the proportions indicated by the reaction

$$Al_2F_6.6NaF+6NaCl=Al_2Cl_6+12NaF.$$

At a clear red heat the bath becomes perfectly fluid and transparent, and an anode of gas carbon and a cathode of sheet copper are introduced. On passing the current the copper did not melt but became covered with a film of deposited aluminium, which in part penetrated the electrode and in part adhered to the surface as a rich alloy which ultimately fused off and sank to the bottom of the crucible. With a plate 1 to 1½ millimetres thick, 10 per cent of its weight of aluminium could thus be de-

* Chemiker Zeitung, xii., 391 (1888). † Idem, xii., 457 (1888).

posited; with one 3 millimetres thick, about 5 per cent. The metal could be made perfectly homogeneous by subsequent fusion in a graphite crucible. Dr. Schmidt further remarks (evidently on the supposition that the reaction he gives actually takes place) that on thermo-chemical grounds sodium would not here be reduced, because while the molecule of sodium chloride requires 97.3 calories for its decomposition, that of aluminium chloride, $\frac{Al_2Cl_6}{2}$, requires only 80.4, and the current would attack first the most easily decomposed. He also states that the calculated difference of potential for the dissociation of aluminium chloride which is $\frac{80.4}{23} = 3.5$ volts, was actually observed, and the tension of the current must have been increased to about 4.5 volts to bring about the decomposition of the sodium chloride.*

Dr. Hampe's statement occasioned several other communications, which he considers and replies to in the following article:†—

"Dr. O—— (whose name I withhold at his own request) writes to me that by electrolyzing pure cryolite, using a negaative pole of molten copper, he never obtained aluminium bronze; but, on the other hand, always obtained it if he used the mixture of cryolite and sodium chloride mentioned by Dr. Schmidt, and in place of the molten copper a thick stick of the unfused metal. A letter from R. Grätzel, Hannover, contains a similar confirmation of the latter observation. By electrolyzing a mixture of 100 parts cryolite with 150 of sodium chloride in

* Aside from Hampe's subsequent remarks as to no aluminium chloride being formed, we would further point out the fact that the decomposition of a chemically equivalent quantity of aluminium chloride requires not $\frac{160.8}{2} = 80.4$ calories, but $\frac{321.600}{6}$ or 53.6 calories, and the calculated difference of potential is properly $\frac{53.6}{23}$ or 2.3 volts. The fact that the observed tension was 3.5 volts shows that the current was not strong enough to decompose the sodium chloride, as Schmidt observes, and the fact that this current deposited aluminium would show that the heat of formation of aluminium fluoride at this temperature cannot be greater than $23 \times 3.5 \times 6 = 483$ (thousand) calories.

† Chemiker Zeitung (Cöthen), xiii., 29 and 49.

a graphite crucible holding 30 kilogrammes, aluminium bronze dripped down from the ring-shaped copper cathode used, while chlorine was freely disengaged at the carbon anode. But after a time, long before the complete decomposition of the cryolite, the formation of bronze stopped—even an attacking of that already formed sometimes taking place. Pellets of an alloy of sodium and aluminium appear on the surface and burn with a white light.

"These comments excited me to further research in the matter. At first, it was necessary to consider or prove whether by melting sodium chloride with cryolite a true chemical decomposition took place, such as Dr. Schmidt supposed. If this were the case, the very volatile aluminium chloride must necessarily be mostly driven off on melting the mixture, and at a temperature of 700° to 1000° C. there could not be any left in it. But an experiment in a platinum retort showed that such a reaction positively does not occur; for neither was any aluminium chloride volatilized, nor did the residue contain any, for on treatment with water, it gave up no trace of a soluble aluminium compound. During the melting of the mixture, acid vapors proceeded from the retort, and a small quantity of cryolite was volatilized into the neck of the retort. Dr. Klochman has shown that cryolite always contains quartz, even colorless, transparent pieces, which to the naked eye appear perfectly homogeneous, showing it when examined in thin sections under the microscope, and on melting the mineral opportunity is given for the following reactions:

$$SiO_2 + 4NaF = SiF_4 + 2Na_2O,$$
$$3Na_2O + Al_2F_6 = 6NaF + Al_2O_3,$$

as is rendered probable by the appearance of delicate crystals of alumina on the inner surface of the retort just above the fusion. The silicon fluoride probably passes away as silicofluoride of sodium.

"If cryolite is fused with such metallic chlorides that really do

bring about a decomposition, there is never any aluminium chloride formed in these cases, but the sodium of the cryolite is exchanged for the other metal. Dr. O——, to whom I owe this observation, fused cryolite with calcium chloride, hoping that aluminium chloride would distil, but obtained instead crystals of the calcium salt of alumina-fluoric acid; thus,

$$Na_6Al_2F_{12} + 3CaCl_2 = 6NaCl + Ca_3Al_2F_{12},$$

and in like manner can be obtained the analogous strontium or barium compounds.

"Just as erroneous as the supposed production of aluminium chloride are the other arguments advanced by Dr. Schmidt, regarding the reasons why sodium could not be set free. The self-evident premises for the propositions are lacking, viz.: that the two bodies compared are conductors. On the contrary, I have previously shown* that aluminium chloride and bromide, and more certainly its fluoride, belong to the non-conductors. It follows, then, that there can remain no doubt that on electrolyzing pure cryolite, or a mixture of it, with sodium chloride, only sodium will be set free at first, either from sodium fluoride or the more easily decomposable sodium chloride. The presence or absence of sodium chloride is consequently, chemically, without significance.

"Since the experiments with solid cathodes gave aluminium, while those with molten copper did not, these results being independent of the presence or absence of sodium chloride, the next attempt made was to seek for the cause of the different results in the differences of temperature. It was found that when the electrolysis takes place at a temperature about the melting point of copper, bubbles of sodium vapor rise and burn, and any aluminium set free is so finely divided that it is attacked and dissolved by the cryolite. To explain this action of the cryolite it is necessary to admit the formation of a lower fluoride of aluminium and sodium, such as I have recently proven the exist-

* Chemiker Zeitung (Cöthen), xi., p. 934 (1887).

ence of.* The solution of the aluminium takes place according to the following reaction:

$$Al_2F_6.6NaF + Al = 3(AlF_2.2NaF).$$

If the electrolysis takes place at a temperature so low that the sodium separates out as a liquid (its volatilizing point is about 900°), large globules of aluminium will be produced, on which the cryolite seems to exert no appreciable action. Nevertheless, the yield of aluminium is much below the theoretical quantity set free. Since pure copper melts at 1050°, and aluminium bronze at 800°, the copper electrodes can remain unfused in the bath while the bronze melts off as it forms, while the temperature can be low enough to keep the sodium in the liquid state. By mixing sodium or potassium chlorides with the cryolite, the melting point is lowered, or at a given temperature the bath is more fluid, and so easier to work. When there is not enough aluminium fluoride present in the bath to utilize all the sodium liberated, the excess of sodium may form an alloy with some aluminium, and rising to the surface, burn to waste. Since cryolite always contains silica, as previously explained, the bronze thus obtained is always rendered hard with silicon, and is not of much value commercially."

Hall's Process.

Although Hall's patents were not issued by the patent office until 1889, yet they were applied for in the middle of 1886, and a commercial-sized plant was put up to work the process in 1888. Mr. Hall really discovered the principle on which his process is based, and made some aluminium by it, on a small scale, in February, 1886.

* Chem. Zeit. (Cöthen), xiii., p. 1 (1879). Hampe melted together aluminium and sodium fluorides in the proportions of one molecule of the first to four of the second, and obtained what is apparently a lower fluoride than cryolite, in which aluminium cannot be otherwise than diatomic, since analysis gives it the formula $AlF_2.2NaF$. This salt is similar in appearance and properties to cryolite. As there are still some doubts, however, about this compound, the above explanation of the solution of aluminium by the cryolite need not be accepted as final.

The inventor of this process, Charles M. Hall, of Oberlin, Ohio, born in 1863, is a graduate of Oberlin College, and while yet a student spent considerable time in experimenting on isolating aluminium with the electric current. Less than a year after leaving college, he conceived the following idea, which I quote in his own words: "It occurred to me that if I could find some stable solvent for alumina itself, which at a reasonable and practicable temperature would dissolve the alumina by the mere mingling of it with the solvent and allow the alumina so dissolved to be electrolyzed out of it, leaving the solvent unaffected, this would possibly be the best process which could be devised for the manufacture of aluminium by electrolysis." Many different salts were tried, to see if they possessed the property required, among them the fluorides of calcium, magnesium, sodium and potassium. These latter salts were the only ones which gave any encouraging results, but the first two were too hard to fuse, and they all dissolved only small quantities of alumina. Hall next tried cryolite, the natural compound of aluminium and sodium fluorides, and found that it melted at a red heat and readily dissolved considerable alumina. This was on February 10, 1886. On applying the electric current to this bath he was not immediately successful; but, attributing the failure to the presence of silica in the crucible lining, he tried a crucible with a carbon lining, and the experiment was entirely successful. This was February 23, 1886, and on July 9, of the same year, Hall applied for patents covering his invention.

P. L. V. Hèroult, of Paris, France, had, however, applied for a United States patent for substantially the same process on May 22, 1886, and the patent office declared an interference and ordered both parties to give evidence as to the date of invention and putting into practice. Hall was able to name February 23, 1886, as the date on which he had put his invention into practical operation, while Hèroult named only the date of his French patent for the same invention, April 23, 1886. (See p. 386.) The result of these proceedings was

that a patent covering the process was issued to Hall on April 2, 1889. (Number 400,766.) This patent has claims covering the use of the following process:

1. Dissolving alumina in a fused bath composed of the fluorides of aluminium and a metal more electropositive than aluminium, and then passing an electric current through the fused mass.

2. Dissolving alumina in a fused bath composed of the fluorides of aluminium and sodium, and then passing an electric current, by means of a carbonaceous anode, through the fused mass.

In the specification of the patent, it is stated that the bath preferred as a solvent contains:

Sodium fluoride	33.2 per cent.
Aluminium fluoride	66.8 per cent.

represented by the formula $AlF_3.NaF$. A convenient method of forming this bath consists in adding to the mineral cryolite 80.3 per cent. of its weight of aluminium fluoride, according to the formula:

$$AlF_3.3NaF + 2AlF_3 = 3(AlF_3.NaF).$$

It is further stated that the bath may be fused in a crucible or melting pot of iron or steel having a carbon lining, that the positive electrode may be of carbon, copper, platinum or any other suitable material, and the negative electrode a carbon rod or the carbon lining of the bath. When the positive electrode is carbon it is gradually consumed by the oxygen liberated, but when copper is used a coating of copper oxide is at once formed on it, which protects it from further oxidation and causes free oxygen to be liberated. The tension required to operate a bath is stated as 4 to 6 volts.

The above description may be taken as summarizing Hall's process as developed by him at the date of application for his patent, July, 1886. It is the writer's opinion that credit should be given to both Hall and Hèroult for originating this inven-

tion, as the principle was discovered independently by each at very nearly the same time; but in the subsequent development and practical application of the invention, Hall in America clearly outstripped Hèroult in Europe.

Several other patents were subsequently applied for by Hall, covering modifications of the original process, and these were all issued with the original patent in 1889.* One covers the use of a potassium-aluminium fluoride, $AlF_3.KF$, instead of the corresponding sodium salt, since it is much more fusible. Also the addition of lithium fluoride to this salt. Another covers the use of calcium and aluminium fluorides to form the bath, such as $2AlF_3.CaF_2$ or $2AlF_3.3CaF_2$. Since this bath is of higher specific gravity than molten aluminium, it is recommended to add to it enough of the salt $AlF_3.KF$ to lower the specific gravity below that of the aluminium. This is unnecessary if alloys of aluminium are to be made, in which case the metal to be alloyed is made the negative electrode and the alloy formed will be sufficiently heavy to sink. For making alloys, the addition of barium fluoride to the bath is recommended, as its high specific gravity is no inconvenience and it is more fusible than the calcium or strontium fluorides. In another of these patents, the bath specified has the formula $2(AlF_3.3NaF) + 2AlF_3.CaF_2$, being made by melting together cryolite, aluminium fluoride and fluorspar. When the bath becomes clogged, by the settling out of a mushy deposit which stops the current, the addition of 3 or 4 per cent. of anhydrous calcium chloride is recommended as clearing or liquefying the bath; this addition is also said to lessen the disintegration of the carbon anodes used.

As at present conducted, the process is worked according to the original patent applied for in 1886, it having been found that almost all the difficulties which the subsequent modifications were designed to overcome are entirely obviated by regular working on a large scale. It has been concluded from

* Numbers 400,664; 400,665; 400,666; 400,667; 400,766.

subsequent experience that almost all the difficulties met at first were the results of the varying composition of the bath and its irregular temperature, and were inherent in attempts to work on a small scale.

From June, 1887, to the middle of 1888, Mr. Hall experimented on his process at the Cowles' Bros. works at Lockport, N. Y. His results here, working on a small scale, were not sufficiently economical to induce that company to continue the work. Mr. Hall, however, was confident that if the process could be started on a large scale, aluminium could be made at a cost very much below its selling price at that time. Leaving Lockport, Mr. Hall went to Pittsburgh, and there, through the influence of Mr. Romaine C. Cole, was successful in interesting several capitalists, who contributed $20,000 in cash to put up a works, and in September, 1888, organized the Pittsburgh Reduction Company, with a capital stock of $1,000,000. The construction of the plant was immediately begun, and in November, 1888, aluminium was being produced at the rate of 50 pounds per day, which found a ready sale at $5 per pound, leaving a handsome profit.

This plant was situated in Pittsburgh, and was operated by steam-power, using coal for fuel. The machinery consisted of two ordinary tubular boilers of sixty horse-power each, and a Westinghouse "automatic" engine of 125 horse-power, running two shunt-wound Westinghouse dynamos. These dynamos, running at 1,000 revolutions, gave each a current of 1,000 ampères at 25 volts tension, and being coupled in parallel gave a current of 2,000 ampères at full speed, or an average of 1,700 to 1,800 ampères at 16 volts on steady runs. This current was passed through two reducing pots, coupled in series. These pots were of cast-iron, 24 inches long, 16 inches wide and 20 inches deep, lined inside with a layer of hard-baked carbon 3 inches thick. From a copper bar above were suspended, by ⅜ inch copper rods, 6 to 10 three-inch carbon cylinders, each originally 15 inches long. Each pot held 200 to 300 pounds of the electrolyte.

It was found that with apparatus and current of this size, outside heating was not necessary; the heat generated by the passage of the current being sufficient to keep the bath fused at the proper temperature. Larger pots have since been used, which will be described later, but as the operation in them is exactly similar to that in the smaller ones, we will describe the process at once.

The carbon lining of the pot forms the negative electrode, connection being made to the iron casing. The fluoride salts to form the bath are placed in the bottom of the cavity, the carbon positive electrodes lowered until they touch the carbon lining, and the current turned on. After a few minutes the salt is melted and when red-hot in the vicinity of each carbon, more salt is thrown around the carbons, or each carbon moved up a little. In an hour or two sufficient salt has been melted to form the bath, and the carbons have been brought out of direct contact with the lining. The bath is now ready to dissolve alumina, which is first sprinkled on top of the bath, and after it has become hot and perfectly dry is stirred in.

The fumes which were arising from the decomposition of the fluorine salts immediately cease, the voltage absorbed by the bath falls, the number of ampères passing increases, and the electrolysis of the dissolved alumina commences at once. Powdered carbon (the stub ends of electrodes ground up) is now placed on top of the bath in a layer about an inch thick, serving to keep in the heat and so reduce the loss by radiation. The carbon electrodes are clamped to a copper bar extending the whole length of the pot (see Fig. 38), and if one part of the bath becomes cooler than it should be, the carbons are crowded together at that point and soon heat it up. In practice, the ends of the carbons are kept about 0.5 to 1 inch from the lining, and each one carries about 250 to 300 ampères. If more current than this passes through a carbon, as might happen if it short-circuited, the copper rod becomes red-hot at its connection with the carbon. As soon as this is observed, the workman raises it slightly and so stops the extra current. The

carbons wear down gradually until only 3 or 4 inches long (the depth of liquid bath is not over 6 inches) and must then be replaced. The consumption of carbons in regular running is less than one pound per pound of aluminium produced, showing that they are burnt according to the reaction

$$Al_2O_3 + 3C = 2Al + 3CO.$$

in which 102 parts of alumina would require 36 parts of carbon to combine with its oxygen, producing 54 parts of metal.

FIG. 38.

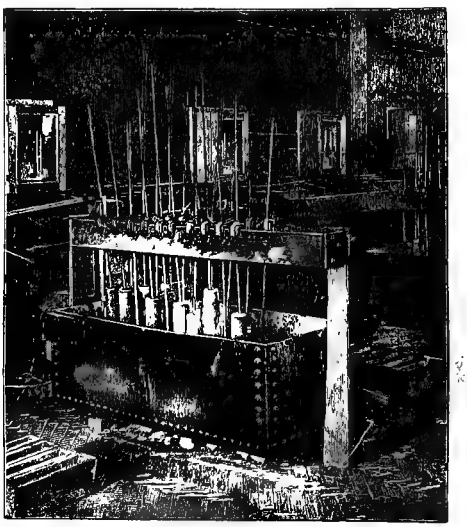

Theoretically, therefore, there is required $\frac{36}{54}$ or $\frac{2}{3}$ of a pound of carbon to 1 pound of aluminium produced. The small amount over this actually used is consumed by the air with which they inevitably come in contact.

In these small pots, a tension of 8 volts is required to operate each, at an ampèrage of 1800. If the voltage rises to 10 or more, it indicates that the alumina in the bath has become exhausted, as is also shown by dense, irritating fluoride fumes.

The workman at once stirs in some of the alumina which is always kept on top of the carbon covering, and the voltage immediately falls. A delicate electrical instrument, set to a certain voltage, gives immediate notice to the workman when the bath is "out of ore." In regular working no fumes arise, the carbon covering entirely conceals the red-hot fluid bath beneath, and one can only convince himself that the bath is really in operation by approaching and noticing the heat radiated. When aluminium has accumulated for several hours, it is ladled out with iron ladles well-rubbed with chalk or plumbago. This operation gives rise to some fumes, and also causes some of the electrolyte to be dipped out with the metal. It has been suggested that a tap-hole should be provided, but there was found great difficulty in keeping the pot tight when this was tried, and the expedient of syphoning out the metal has been found more practicable.

The crude ingots thus poured are re-melted in large crucibles; the re-melting plant is shown in Fig. 39.

The alumina used in this plant was from the German manuturer, Bergius, at Goldschmeiden, near Breslau, Silesia. As imported, it contained about 33 per cent. of moisture, which is driven off in a drying furnace. The cost of alumina was, in 1890, five cents a pound delivered in Pittsburgh, which would make the dried alumina cost 7.5 cents per pound plus the cost of calcining, which is not over 0.5 cent. If absolutely pure, alumina should contain 52.94 per cent. of aluminium, but as this calcined alumina usually contains about 1 per cent. of impurities, chiefly silica, there is only a little over 52 per cent. of metal in it. An accurate account of several months' running showed that the Hall process extracts a fraction over 50 per cent. of metal from it. The alumina to furnish one pound of aluminium therefore cost in 1890 about 16 cents. Since then, the alumina is calcined in Germany before shipment, saving in freight and customs dues, and can probably be laid down now in New York at 5 cents per pound, making a cost of 10 cents per pound of aluminium. There is, besides this, a small waste

of bath material, which costs in the neighborhood of 7 cents per pound to make, but since this does not in actual running amount to over 2 pounds per 100 pounds of aluminium produced, this item of expense is quite small.

The output of these small pots was about one pound of metal an hour from each, and they were kept in continued operation for several weeks at a time. If pure alumina is used,

FIG. 39.

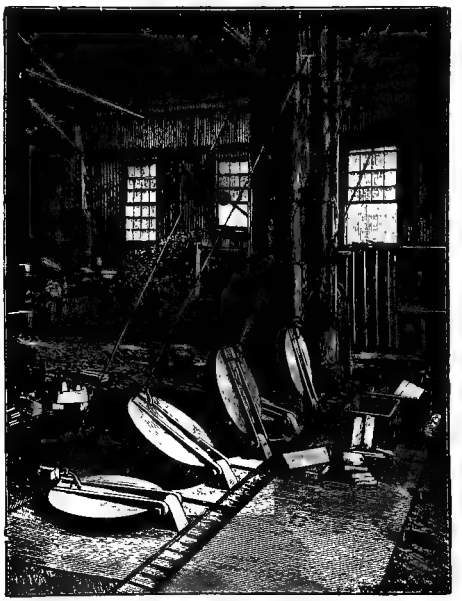

pure aluminium is produced; that made from Bergius' alumina averaging over 98 per cent. pure.

When a bath has been put into operation, the metal first produced is contaminated with the silicon and iron present in the bath material, but in a few days these are completely eliminated, and the bath material is almost chemically pure save for the impurities introduced in the alumina.

If calcined, selected raw bauxite is used in the pots, the metal produced averages 94 to 96 per cent. pure, and is sold for

use in iron and steel. Two analyses of such second quality metal gave:

Aluminium	94.16	95.93
Silicon	4.36	2.01
Iron	1.48	2.06

As the material used only costs about 1 cent per pound ready to put into the pots, and about 2⅕ pounds make one of metal, this second quality metal costs about 7 cents less per pound than the first quality.

An estimate of the cost of producing aluminium in this plant in 1889, at the rate of fifty pounds per day, is as follows:

100 lbs. calcined alumina @ 8 cts.	= $8.00
Fluorides for bath @ 7 cts.	= .50
Carbons	= 1.00
50 horse-power engine	= 15.00
2 engineers @ $3.00 per diem	= 6.00
6 workmen @ $2.00 "	= 12.00
Superintendence, office expenses, etc.	= 10.00
Interest on plant, rent, etc.	= 7.50
Cost of about 50 lbs. of aluminium	$60.00

In the early part of 1890 the plant was greatly enlarged. The additions consisted of three Babcock and Wilcox boilers of 200 horse-power each, fired by natural gas; two 200 horse-power Westinghouse compound engines; two shunt-wound Westinghouse dynamos running 325 revolutions per minute, connected in parallel and giving a total current of 5000 ampères at 50 volts tension. The conductors for this current were two copper bars, 6 inches by 0.5 inch, giving a total cross-section of 6 square inches. This gives a little over 800 ampères per square inch section. This current operated five large pots connected in series, averaging 9 volts to a pot. These large pots are of one-quarter inch wrought iron, 5 feet long, 2½ feet wide and 2 feet deep, with a carbon lining 4 to 6 inches thick, and supported on bricks to keep the bottom cool. Above are two copper bars to which a double row of carbon electrodes are clamped, there being 10 on each row or 20 in all. Each of

these pots produced 60 to 70 pounds of aluminium a day, making the production of the entire plant in 1890 about 400 pounds per day. The cost of aluminium, working on this scale, could scarcely have been over $0.75 per pound, since the metal made here was sold during 1891 for $1.00 per pound.

During 1891, in order to obtain room to extend and cheapen fuel, the entire plant was moved to New Kensington, Pa., on the Allegheny River 18 miles from Pittsburgh. At this place the capacity of the plant has been greatly increased, there being approximately 1500 horse-power employed, and the output having been increased to 1000 pounds per day in 1893 and to nearly 2000 pounds per day in 1894. Since the selling price has been reduced to $0.50 per pound, it is evident that the present cost cannot be much over $0.40, if so high. Captain A. E. Hunt, president of the company, is authority for saying that as the process is operated on an increasing scale, and more experience is had in running it, the cost in the future will approximate $0.20 per pound, the lowest limit by this process.

In July, 1890, a plant to work Hall's process was put into operation at Patricoft, Lancashire, England, with a capacity of about 300 pounds of aluminium a day. This plant was in operation until 1894, when competition from Switzerland compelled it to close.

During 1894, the United States Company have been constructing a larger plant at Niagara Falls, being furnished power by the Niagara Falls Power Co. A contract has been made to take 6000 horse-power, and the plant, so far constructed, is as follows:*

A 5000 horse-power turbine, in the Power Company's power-house, runs a 5000 horse-power, low frequency, alternating current Tesla dynamo. This machine, at full speed, gives two currents of 2500 volts by 775 ampères each, alternating 50 times per second. The exciting circuit is continuous, obtained from the main circuit by a rotary transformer, and amounts to only 0.2 per cent. of the main current. The total current of 2500

* This plant was put into operation on August 26, 1895.

volts by 1550 ampères is conducted through an underground tunnel one-half mile to the aluminium works, through copper rope conductors, with a total section of 4.3 square inches, with a drop in potential of 12 volts. At the works, the current is first passed through a set of stationary transformers, each of 250 horse-power, in which the current is reduced from 2487 volts to 115 volts. The alternating current of 115 volts next passes to rotary transformers, each of 500 horse-power and taking the current from two stationary transformers. In these the alternating current of 115 volts is changed to a direct current of 160 volts, the quantity of current furnished by each rotary transformer being 2500 ampères. These currents of 2500 ampères by 160 volts are conducted to the pot room on copper bars with 1.25 square inch section, each passing through a separate switch-board, on which are shunt ammeters and volmeters, and then passed to the pots. The buildings are all of iron, the main reduction room being 180 by 85 feet.

It is not difficult to estimate what the output of the two works will be. At Pittsburgh each horse-power of electrical energy produced about 1.2 pounds of aluminium per day, at which rate a 5000 horse-power plant should make 6000 pounds, equivalent in round numbers to 1000 tons a year, the present value of which is $1,000,000.

Reactions and efficiency of the process.—Taking the first small plant, a current of 1800 ampères in two vats should theoretically produce 56.4 pounds of aluminium per day. As 50 pounds were obtained, on an average, the efficiency shown in this direction is nearly 90 per cent. As only about 2.5 volts out of the 9 volts absorbed by the bath, is used in decomposing the alumina, we have about 30 per cent. of the current thus utilized. The efficiency over all is therefore 90 per cent. of 30 per cent.=27 per cent. This means that the work of separating aluminium from oxygen represents 27 per cent. of the actual energy of the current. The difference between 9 and 2.5, or 6.5 volts, is absorbed in the conduction resistance of the bath, being converted into heat. This would give a heat develop-

ment of $6.25 \times 1800 \times 0.00024 = 2.7$ calories per second, or 9720 calories per hour. To this we may add the heat of oxidation of the carbon to carbonic oxide, and we have the total heat generated in the bath. A balance would show as follows:

Heat Developed per Hour.

By electrical resistances	9720	calories.
Oxidation of the carbon	960	"
Total	10680	"

Heat Distribution per Hour.

Heating 2 pounds alumina to 900° C.	250	calories.
Withdrawn with the aluminium	175	"
Lost by radiation and conduction	10265	"
Total	10680	"

As to the real reaction in the bath, by which aluminium is liberated, several metallurgists have taken the ground that the aluminium fluoride present is the substance primarily dissociated by the current, and that the fluorine set free at the anode immediately acts on the alumina present in solution and reforms aluminium fluoride, liberating oxygen, which then unites with the carbon. According to this view the reactions are

$$2AlF_3 + \text{Current} = 2Al + 6F.$$
$$Al_2O_3 + 6F = 2AlF_3 + 3O.$$
$$3C + 3O = 3CO.$$

This theory must assume either one of two things; first, that the alumina added never becomes an integral part of the bath, but remains suspended mechanically; or, second, that if the alumina really is part of the bath, it is a stronger compound than aluminium fluoride, and therefore, the current decomposes the latter. This theory, however, involves several contradictions. If, for instance, alumina is really a stronger compound than aluminium fluoride, how could the gaseous

fluorine decompose alumina, forming aluminium fluoride? Since gaseous fluorine *can* decompose alumina, as was proven by Moissan, it follows that alumina is therefore a weaker compound than aluminium fluoride, and that when an electric current is passed through a bath containing these two compounds the alumina is necessarily the first to be decomposed. The only refuge left for this theory is, then, to maintain that the alumina is not truly dissolved in the bath, but is only mechanically suspended. This, however, is contrary to the way in which the bath behaves. Absorption of the fluorine could not possibly be as perfect in that case as it really is in practice. Besides, an experiment of Mr. Hall's settles the case, it seems to me, beyond question. On passing the current through an anode of clean copper, it becomes immediately coated with a layer of copper oxide. If fluorine were at all set free, it would be liberated in immediate contact with the anode, and copper fluoride must necessarily have been formed; but no trace of that salt is observed. It thus appears impossible to me that the electric current does anything but dissociate oxygen from aluminium.

It has been suggested that the alumina is dissolved in the bath by forming aluminium oxy-fluoride, and that this is the substance electrolyzed. This may or may not be true, but there is up to the present time no positive proof for the theory, and several circumstances against it. No chemist has as yet isolated and analyzed any such salt. If such salt is formed, the larger the proportion of aluminium fluoride in the bath, the more alumina it ought to dissolve. But cryolite contains 40 per cent. of aluminium fluoride, and dissolves at least 25 per cent. of its weight of alumina to a clear solution, while the salt $AlF_3.NaF$, containing 66 per cent. of aluminium fluoride, and made by adding aluminum fluoride to cryolite, dissolves barely 10 per cent. Further, no evolution of heat or other signs of chemical action are observed when dissolving alumina in the bath. If such a salt exists in solution, the elements set free at the anode must be oxygen and fluorine, but it is already shown

that no fluorine can be detected there even when using a copper anode. So, while the theory of an oxy-fluoride may be true, and facts unknown to us now may reconcile these apparent contradictions, yet at present there is no positive proof to give in its favor.

In connection with this process, the following determinations by the writer of specific gravities, when cold and melted at a red heat, of the substances used in the bath, are of interest:*

	Cold, after fusion.	Molten at a red heat.
Commercial aluminium	2.66	2.54
Commercial cryolite from Greenland	2.92	2.08
Cryolite containing all the alumina it can dissolve	2.90	2.35
Cryolite+aluminium fluoride forming the salt $AlF_3.NaF$ (Hall's preferred bath)	2.96	1.97
Same as above, but containing all the alumina it can dissolve	2.98	2.14
Salt $AlF_3.KF$	2.35	——
Powdered calcined alumina	3.60	——

Hèroult's Processes.

P. L. V. Hèroult, of Paris, France, patented in 1886 the following process.† Alumina is fluxed with cryolite, the bath being contained in a carbon crucible serving as the negative electrode, which is placed inside a larger crucible and the space between filled with graphite. (Fig. 40.) The positive electrode is of carbon and dips into the fluid material. The negative electrode is of carbon, and connects with the graphite filling between two crucibles. A cover having holes for the electrodes is placed over the whole, and a layer of clay and loam packed on top of the cover. A current of only 3 volts will produce decomposition, and the alumina is alone decomposed, the cryolite remaining unaltered. The aluminium collects in the bottom of the crucible, and alumina is added from time to time to renew the bath. To prepare alloys, a negative electrode is made of

* Journal of the Franklin Institute, July, 1894, p. 51.

† French patent, 175,711; April 23, 1886.

the metal to be alloyed, and dips into the bath, and as the current passes the alloy is formed and falls melted to the bottom of the crucible. A convenient strength of current for a crucible 20 centimetres deep by 14 centimetres in diameter inside, with a carbon anode 5 centimetres in diameter, is found to be 400 ampères, with an electro-motive force of 20 to 25 volts.

The idea or principle involved in the above is exactly simi-

FIG. 40.

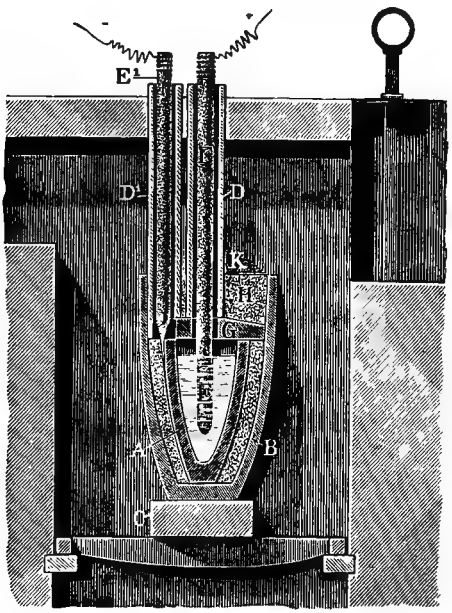

lar to Hall's process, and when Hèroult applied for United States patents in 1886 the two claims interfered, and the evidence given in the patent office showed Hall to be the prior inventor, so that the process in this country belongs entirely to Hall. (See Hall's process, p. 373.) It is evident that the process was discovered by these two inventors, on opposite sides of the ocean, at very nearly the same time, and entirely independent of each other. Hall, however, kept on improving his

process until, in 1888, it was working on an industrial scale. Hèroult, on the other hand, virtually abandoned his process for the time, and did not make any pure aluminium by it on a commercial scale until the end of 1889, at which time Hall had been selling aluminium for a year and Hall's patents had been issued over six months. It appears very much as if Hèroult was not aware of the possibilities of his process until Hall's success showed the way.

Meanwhile, Hèroult had devised another method of producing aluminium alloys, and successfully established it on a commercial scale. This process is as follows:* Pure alumina is melted by the intense heat of a powerful electric current, and then electrolyzed by the same current, using melted copper beneath the alumina as the cathode. The product is aluminium bronze. Alumina without copper or iron as a cathode cannot be electrolyzed to produce pure aluminium, as the metal produced would rise to the surface and be volatilized by the intense heat.

The Société Metallurgique Suisse, which acquired both of Hèroult's patents, put up a plant to work the alloy process on a commercial scale in July, 1888. This firm had experimented some time with Dr. Kleiner's process, but abandoned it about the middle of 1887, to try Hèroult's process, and with such successful results that the plant about to be described was decided on. The instalment consisted of two large dynamos constructed especially for this work by the Oerliken Engineering Company, and directly coupled to a 300 horse-power Jonval turbine situated between them and mounted on a horizontal shaft. A separate dynamo of 300 ampères and 65 volts, driven by a belt from a pulley upon the main shaft, is used to excite the field magnets of the two large machies. These large dynamos were originally intended to give each a current of 6000 ampères at 20 volts electro-motive force when running at 180 revolutions per minute, but sufficient margin was allowed in the

* French patent, 170,003, April 15, 1887. English patent, 7,426 (1887). U. S. patent, 387,876, August 14, 1888. German patent, 47,165, December 8, 1887.

strength of the field to be able to work to 30 volts. They have even worked up to 35 volts on unusual occasions without any undue heating. It happens sometimes that the end of the anode touches the molten cathode, producing a short circuit, when the current will suddenly rise to from 20,000 to 25,000 ampères, without, however, damaging the machine.

The main conductors are naked copper cables, about 10 centimetres diameter, and no special precautions are taken to insulate them, since the current is of comparatively low potential, and a leakage of 100 ampères more or less in such a large current is too insignificant to take the trouble to avoid. An ampèremeter is placed in the main circuit, its dial being traversed by an index about 1 metre long, which is closely watched by the workman controlling the furnace.

The furnace or crucible first used consisted of an iron box cast around a carbon block, the iron, on contracting by cooling, securely gripping the surface of the carbon on all sides, and thus insuring perfect contact and conduction of the current from the cathode inside. This method was found only suitable for small crucibles, and the next furnace was built up of carbon slabs held together by a strong wrought-iron casing. The interior depth of the crucible was 60 centimetres, length 50 and breadth 35 centimetres, which would permit the introduction of the carbon anode and leave a clear space of 4 centimetres all around it horizontally. At the bottom of the cavity is a passage to a tap-hole, *D* (Fig. 41), closed by the plug *E*, which is from time to time withdrawn to run off the alloy. The carbon anode, *F*, is suspended vertically above the crucible by pulleys and chains, which permit it to be raised and lowered easily and quickly. This anode is built up of large carbon slabs laid so as to break joints, and securely fastened together by carbon pins. The whole bar is 250 centimetres long, with a section 43 by 25 centimetres, and weighs complete 255 kilos. The conductor is clamped to the anode by means of the copper plates, *G*. The crucible is covered on top by carbon slabs, *H*, *H*, 5 centimetres thick, leaving an opening just large enough

for the anode to pass through. The openings, *J*, *J*, closed by the lids, *K*, *K*, serve for introducing fresh copper and alumina.

The materials used have just been mentioned. Electrolytic or Lake Superior copper is used, the former being perhaps preferred if from a good manufacturer. The alumina is bought as commercial hydrated alumina, costing in Europe 22 francs per

FIG. 41.

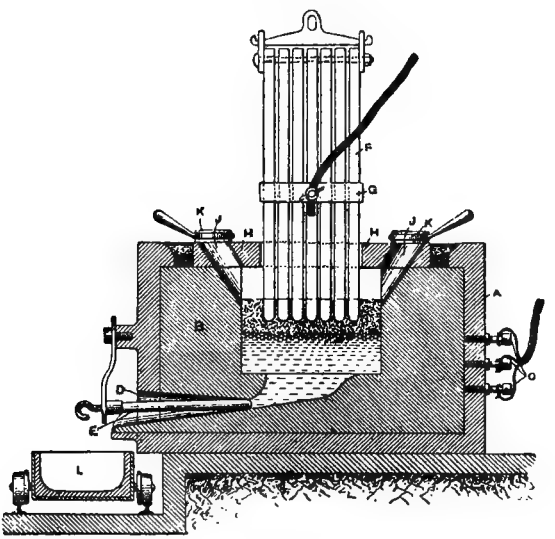

100 kilos (2 cents per lb.). This is, of course, calcined before using, each 100 kilos furnishing about 65 kilos of alumina. Corundum can be substituted for the artificial alumina; some from North Carolina was tried, and is said to have given even more satisfactory results. Commercial bauxite has been used, but since it contains more or less iron its use is confined to the manufacture of ferro-aluminium. It is very cheap in Europe, and requires no other preparation than simple calcining.

The operation is begun by placing copper, broken into rather small pieces, in the crucible. The carbon anode is then approached to the copper, which is quickly melted by the current. The bath of fluid copper then becomes the negative

pole, and ore is immediately fed into the crucible. It also is soon melted and floats on top of the copper. The electrolysis now proceeds, care being taken that while the anode dips into the molten ore, it does not touch the molten cathode. Particular stress is laid on the economy of keeping the distance between the electrodes small, the reason given being that "the space between, being filled with a layer of badly-conducting molten ore, offers a resistance which increases with the distance; and although resistance is necessary, in order that the current should produce heat, it is not economical to have more heat than is necessary to melt the ore—the work of separating the metal from the oxygen being chiefly done by the electrolytic action of the current, and not by the high temperature." In practice, this intervening space is not over 3 millimetres (one-tenth of an inch). The workman in charge, by watching the indications of the ampèremeter, is enabled to maintain the anode at its proper distance without any difficulty; it is proposed to do this regulating automatically by means of an easily-constructed electrical device. The oxygen liberated gradually burns away the anode, it being found that about one kilo of the anode is consumed for every kilo of aluminium produced.

After the operation commences, the alumina and metal are introduced alternately in small quantities at frequent and regular intervals, and the alloy is tapped out about every twelve hours. The only wear to which the crucible is subjected is from the accidental admission of small quantities of air; this waste is scarcely appreciable. All oxygen evolved from the bath is evolved in contact with the anode and burns it. When the anode has worn down until too short for further use, it is replaced by another, the pieces of carbon left being utilized for repairing, covering or building up the crucible. The operation is kept up night and day, and it is generally more than a day after starting before the crucible is thoroughly up to its maximum heat and work. Two reliefs of five men each operate the plant, one to superintend, one to prepare

and dry the alumina, a third to control the working of the crucible by regulating the anode, a fourth to feed ore and metal into the crucible, and the fifth to take care of the machinery, prepare anodes, crucibles, etc. All five work together to replace an anode or tap the crucible. A part of each tapping is analyzed, to determine its percentage of aluminium. It is the aim to produce as rich a bronze as possible at the first operation (over 42 per cent. of aluminium has been reached), and its subsequent dilution to any percentage desired is done in any ordinary smelting furnace.

The average current supplied the crucible is 8000 ampères and 28 volts, requiring an expenditure of a little over 300 horse-power in the turbine. Starting cold it required, in one instance, 36 hours to produce 670 kilos of aluminium bronze containing 18.3 per cent. or 122.67 kilos of aluminium. Taking the current as 300 electric horse-power, this would be a return of 11 grammes per hour or 0.264 kilos (0.6 lbs.) per day for each electric horse-power. It is claimed by Mr. Hèroult that the furnace takes several days to attain its full efficiency, and that when it does so the above charge can be worked in 12 hours, which would triple the above production per horse-power. This claim is backed by figures as to 271 hours of actual operation, during which time the crucible cooled several times, but the average over the whole period was 22⅔ grammes per hour or 0.544 kilo (1.2 lbs.) per day for each horse-power (163 kilos of aluminium per day, total production). During actual operation at full efficiency, Mr. Hèroult claims to get 35 to 40 grammes of aluminium per horse-power-hour, which would mean 11 to 15 horse-power-hours per pound of aluminium, or 1.75 to 2.1 lbs. of aluminium per horse-power per day.

An idea of the percentage of the useful effect derived from the current may be had very easily by considering that 1 electric horse-power = 750 Watts = 644.4 calories of heat per hour. (See p. 302.) As each gramme of aluminium evolves 7.25 calories in forming alumina, the production of 1 electric horse-power in 1 hour (if its energy were utilized solely for separat-

ing aluminium from oxygen) would be 88.88 grammes. Therefore the heat energy of the current is amply sufficient to account for all the alumina decomposed, leaving over the heat produced in the crucible by the union of oxygen with the carbon anode. Looking at the other side of the question, the electrolytic action, we can easily calculate from the strength of the current what it could perform. A current of 8000 ampères can liberate 2.68 kilos of aluminium per hour,* according to the fundamental law of electro-deposition. If, then, from the figures given, there were actually produced 3.3 kilos and 6.8 kilos per hour, and 10.5 to 12 kilos are claimed when up to the full efficiency, it is impossible that more than a fraction of the aluminium is produced by *electrolytic* decomposition of alumina, and the claim that the process is essentially electrolytic is without foundation. Similar calculations with the data given with regard to Cowles' process will lead to exactly similar conclusions, viz: that the absolute energy of the current, if converted into its heat equivalent, is many times more than sufficient to account for the decomposition of the alumina on thermal grounds, but the amount of current used will not suffice to explain the decomposition of the alumina as being electrolytic. Therefore, in both these processes, the oxygen is abstracted from alumina by carbon, the condition allowing this to take place being primarily the extremely high temperature and secondarily the fluidity of the alumina. The presence of copper is immaterial to the reduction, as is clearly shown in the Cowles process.

In November, 1888, the Allgemeine Electricität Gesellschaft of Berlin united with the Société Electrometallurgique Suisse in purchasing the Hèroult Continental patents and organizing the Aluminium Industrie Actien Gesellschaft, with a capital of 10,000,000 marks. Dr. Kiliani, the well-known electrometallurgical expert, was made manager of the works. On his taking charge, a much larger plant was begun, including foundries and machine shops for casting and utilizing ten tons

* N. B. Only one furnace was used on the circuit.

of bronze which it was intended to produce daily. This plant, consisting of 8 crucibles, was put into operation in 1891, with a capacity of 1000 kilos of alloyed aluminium daily.

About this time, Hèroult in co-operation with Kiliani took up again his process for producing pure aluminium, stimulated thereto, no doubt, by the success of the Hall process in America. They found that by modifying slightly the shape of their crucibles and using a bath of cryolite to dissolve the alumina, the operation could be practically carried on in their alloy type of furnace. The apparatus used for producing pure aluminium is shown in Fig. 42. It will be noticed that

FIG. 42.

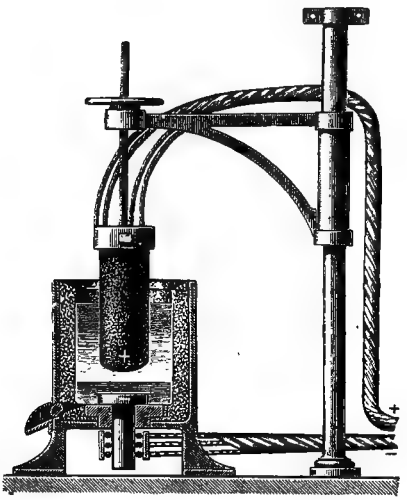

the carbon lining is not needed so thick as in the alloy furnaces, since the temperature is so much lower; also that the entire lining is not taken as the negative electrode, but a negative pole of carbon is inserted through the bottom of the crucible. This is the form of apparatus now in use at the Swiss works, producing pure aluminium so cheaply that the alloy process is nearly abandoned.

The plant at the Rhine Falls, as now operated, consists of

the 300 horse-power turbine used since 1888, two 600 horse-power turbines also of the Jonval type, put into operation in 1891, and five other 610 horse-power turbines, four of which were put into operation in May, 1893, and the other a few months later. The water-rights obtained by the company in 1889 from the Canton Schaffhausen allowed it to take from the Rhine 20 cubic metres (700 cubic feet) of water per second, which at a fall of 20 metres gives an effect of 4000 horse-power. The combined power of the above turbines exceeds this, but one is always kept at rest and only seven regularly run. The turbines are worked with an upward current of water, and the dynamos are revolved horizontally like huge tops above the turbine-shafts. The 600 horse-power dynamos are of the Oerlikon make, and at 150 revolutions per minute give a steady current of 7500 ampères at a tension of 55 volts. The current is carried by massive copper conductors to the crucibles.

This plant, working to its full capacity since the middle of 1893, turns out daily 2500 kilos (5500 pounds) of aluminium, equal to 900 metric tons, a year. It is said that this amount is not sufficient to supply the demand for the metal, and that the company contemplates acquiring a large water power at Rheinfelden, near Basle, and erecting there an even larger plant than their present one.

In 1888 the Société Electro-metallurgique Française established a works at Froges (Isère), 12 miles from Grenoble, to manufacture aluminium alloys by the Hèroult process. They commenced selling alloys in the early part of 1889, and soon after commenced making pure aluminium in the same manner as has been described at Neuhausen. Their plant consists of two turbines of 300 horse-power each, with two dynamos of 7000 ampères and 20 volts each, with an output estimated at 3000 kilos of alloys per day, which means 200 to 300 kilos of aluminium. There are ten crucibles, five of which are shown in Fig. 43. Each crucible requires about 10 volts to run it, and produces 1 to 1.2 kilos of aluminium per hour, with an ex-

penditure of about 2 horse-power for each kilogramme produced per day. The output during 1893 was 50,000 kilos of aluminium, over 97.5 per cent. pure.

In 1893 this company acquired a large water power at La Praz, near Modane, and expected to be manufacturing aluminium there in 1894.

The United States Aluminium Metal Co. was organized to

FIG. 43.

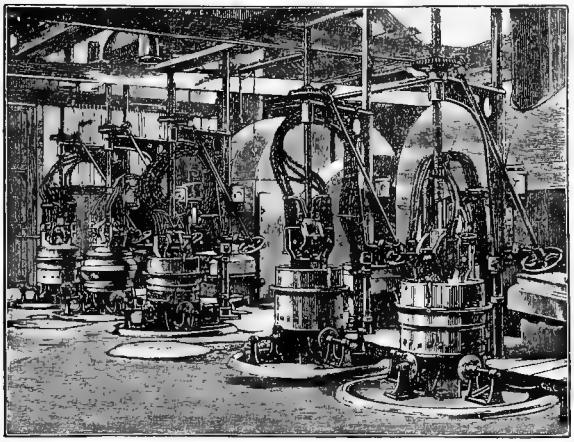

HÈROULT ALLOY FURNACES AT FROGES, FRANCE.

work the Hèroult alloy process in this country. An experimental plant, under Mr. Hèroult's personal direction, was started at Bridgeport, Conn., in July, 1889, but the dynamo proved inadequate, and was burnt out. A new one was ordered from the Oerlikon Works, Zurich, which arrived the following November, and was put to work early in 1890 at Boonton, N. J. This dynamo was driven by water-power, and at 220 revolutions gave a current of 3500 ampères at 35 volts tension. This current was sent through one crucible, shown in Fig. 44, producing aluminium bronzes and ferro-aluminium. This plant was only run for a few months, and no attempt has been made to enlarge it to an industrial scale.

As the Neuhausen works are now (1895) selling aluminium at $0.35 per pound in large quantities, it is interesting to attempt to estimate what the cost is at present. They sell three qualities of aluminium, designating them as follows:—

FIG. 44.

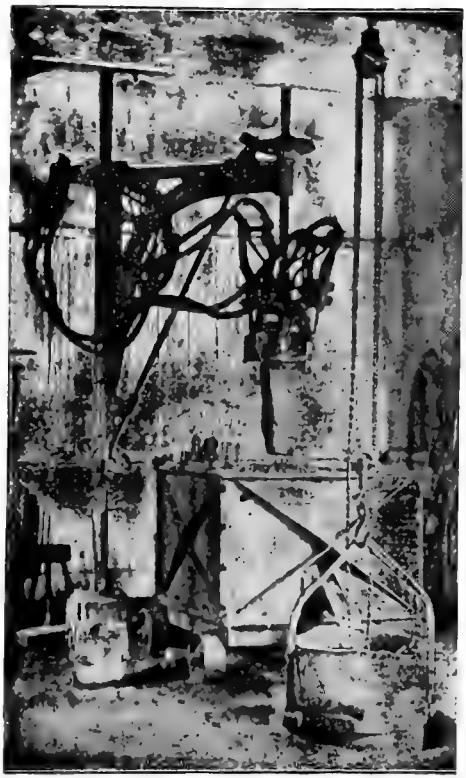

A HEROULT FURNACE.

	COMPOSITION.		
	Silicon.	Iron.	Aluminium.
No. 0	0.06	0.04	99.90
No. 1	0.18	0.21	99.61
	0.51	0.34	99.33
No. 2	1.84	1.37	96.79
	3.82	3.34	92.84

The above price is for No. 1 metal. In fact, the cost of these

different grades differs only in the cost of the raw material, all other expenses being the same. Making calculations on No 1 grade, the cost at Neuhausen is probably as follows per kilo of aluminium:—

2 kilos calcined alumina, @ fr. 0.40	0.80	francs.
0.3 kilos cryolite, @ fr. 0.75	0.25	"
1.2 kilos carbon electrode, @ fr. 0.30	0.35	"
Power—40 H. P., hours	0.15	"
Labor and superintendence	0.35	"
General cost, repairs, etc.	0.50	"
	2.40	"

The cost of No. 1 aluminium at Neuhausen is therefore at present about 2.50 francs per kilo, or 23 cents per pound. The additional cost of alumina for making No. 0 metal is probably 0.60 francs, and the lower cost of No. 2 metal, due to using raw bauxite, about 0.40 francs. One of the officers of the company is quoted as saying that they could make No. 1 aluminium for 2 francs per kilo if working a plant producing 10,000 kilos per day. A plant of such a size is one of the possibilities of the next five years.

Faure's Proposition.

Camille A. Faure, whose process of making aluminium chloride is described on p. 166, proposes to obtain the metal therefrom by electrolysis, using carbon electrodes. M. Faure states that if the process is carried out on a large scale the chlorine set free can be utilized to form bleaching powder, and will thus nearly repay the whole cost of manufacturing the aluminium. Patents have been applied for, covering the details of the electrolytic apparatus. The inventor states that he has determined on a large scale that anhydrous, molten aluminium chloride can be practically decomposed at 300° C. by an electromotive force of 5 volts, which comprises the force required for actual decomposition and also that required to overcome the resistance of the bath. At this rate, it would require an expenditure of 840 horse-power to produce 1000 kilos of aluminium

per day, which is about twice as efficient as present processes; but Mr. Faure bases his ideas of economy entirely on the value of the bleaching powder obtained. He is sanguine of being eventually able, if working on a sufficiently large scale, to make aluminium at five cents per pound, and is still experimenting in his laboratory at Grenoble.

Winkler's Patent.

August Winkler,* of Görlitz, proposes to electrolyze a fusible phosphate or borate of aluminium. This bath is made by melting alumina or kaolin with phosphoric or boracic acid, the proportions being such that the acid is saturated; the separation of aluminium will not be hindered if alumina is added continually to combine with the acid set free. Carbon electrodes are used.

Willson's Process.

Mr. Willson, organizer of the Willson Aluminium Company, of Brooklyn, N. Y., has patented the reduction of aluminium alloys in an electrical furnace, as follows: The negative electrode is a graphite crucible resting on a carbon slab to which connection is made. The positive electrode is a hollow carbon rod, passing through a hole in the cover. The operation is similar in every respect to Hèroult's alloy process (p. 390), excepting that reducing gases, as illuminating gas, are passed into the crucible through the hollow anode during the operation, and it is stated that the anode does not touch the molten material beneath. Copper and corundum are charged, and alloys with 3 to 18 per cent. of aluminium are made. It is claimed that the reducing gases perform the larger part of the reduction, and in addition prevent the wasting away of the carbon anode. A larger dynamo was constructed to work this process, and the plant erected at Spray, N. C., near the corundum deposits, but very little of the alloy has found its way into the market.

* German Patent, 45,824, May 15, 1888.

*Grabau's Process.**

This process proposes the electrolysis of a bath composed of aluminium fluoride and caustic soda or potash or their carbonates. The particular advantages claimed are that the aluminium fluoride is procurable very pure by the inventor's chemical processes (see p. 172), also that the alkaline salts are easily procurable free from iron and silica, and if the operation is conducted in a properly-constructed crucible, very pure aluminium can be made. The electricity is supposed to break up the aluminium fluoride, the fluorine attacking the alkali forming an alkaline fluoride, while the carbonic acid is driven off as gas. If an excess of aluminium fluoride is used, cryolite will be left in the bath, which can be sold as a by-product.

It does not seem probable that this process can ever compete in cheapness with those based on the direct electrolysis of alumina, nor make purer metal than can be made by the others with a little extra care.

Bucherer's Process.†

This inventor claims the electrolysis of the double sulphides of aluminium and an alkaline or alkaline-earth metal, mixed with molten halogen salts. The double sulphide is made by melting alumina with an alkaline polysulphide, sulphur and carbon according to the reaction

$$3Na_2S + Al_2O_3 + 3C + 3S = Al_2S_3.3Na_2S + 3CO.$$

This double sulphide dissolves easily in a fused bath of alkaline or alkaline-earth chlorides or fluorides; for instance, molten sodium and potassium chlorides work well either alone or together. The bath needs only a feeble current to electrolyze it, and produces very pure aluminium.

While these claims may be all true, yet it appears that considerable expense would be incurred in making the sodium

* German Patent, 62851, June 13, 1891.

† German Patent, 63995, 1892.

polysulphide and in taking care of the sodium sulphide accumulating in the bath. Pure alumina would have to be provided, to start with, and the additional expense for chemicals is all incurred to save say 50 per cent. of the electrical power used in other processes. It does not appear that the process will be as cheap as those based on the direct electrolysis of alumina.

Another Sulphide Process.

The Aluminium Industrie Actien-Gesellschaft of Neuhausen have taken out the German patent, No. 68909, in 1892. This patent claims the electrolysis of aluminium sulphide dissolved in a bath of alkaline or alkaline-earth chlorides or fluorides, being kept molten during electrolysis by the electrical heat. The current needed for the bath is 2.5 to 3 volts if melted by exterior heat, 5 volts if melted by the internal heating of the current. As particular advantages are claimed,

1. The carbon electrode is not destroyed, it being at a lower temperature than that at which carbon and sulphur combine.

2. The small voltage required (theoretically, less than 1 volt is needed for decomposition).

3. The aluminium sinks readily in the bath, avoiding short circuits.

4. The sulphur set free can be condensed and used over in making the aluminium sulphide.

CHAPTER XII.

REDUCTION OF ALUMINIUM COMPOUNDS BY OTHER MEANS THAN SODIUM OR ELECTRICITY.

No very exact classification of these numerous propositions can be made, since often many reducing agents are claimed in one general process. Where such general statements are made, the method will be found under the most prominent reducing agent named, with cross references under the other headings.

Reduction by Carbon without the Presence of other Metals.

About the first attempt of this nature we can find record of is the following article by M. Chapelle:*—

"When I heard of the experiments of Deville I desired to repeat them, but having neither aluminium chloride nor sodium to use I operated as follows: I put natural clay, pulverized and mixed with ground sodium chloride and charcoal, into an ordinary earthen crucible, and heated it in a reverberatory furnace, with coke for fuel. I was not able to get a white heat. After cooling, the crucible was broken, and gave a dry pulverulent scoria, in which were disseminated a considerable quantity of small globules about one-half a millimetre in diameter, and as white as silver. They were malleable, insoluble in nitric or cold hydrochloric acid, but at 60° C. dissolved rapidly in the latter with evolution of hydrogen; the solution was colorless, and gave with ammonia a gelatinous precipitate of hydrated alumina. My numerous occupations did not permit me to assure myself of the purity of the metal. Moreover, the experiment was made under conditions which leave much to be

* Compt. Rendus, 1854, vol. xxxviii., p. 358.

desired, but my intention is to continue my experiments, and especially to operate at a higher temperature. In addressing this note to the Academy I but desire to call the attention of chemists to a process which is very simple and susceptible of being improved. I hope before many days to be able to exhibit larger globules than those which my first experiment furnished."

M. Chapelle never did address any further communications to the Academy on this subject, and we must presume that further experiments did not confirm these first ones. The author was once called upon to examine a slag full of small, white metallic globules, the result of fusing slate-dust in a similar manner to M. Chapelle's treatment of clay. They proved to be globules of siliceous iron reduced from the iron oxide present in the slate. It is not impossible that Chapelle's metallic globules were something similar in composition to these.

G. W. Reinar* states that the pyrophorous mass, which results from igniting potash or soda alum with carbon, contains a carboniferous alloy of aluminium with potassium or sodium, from which the alkaline metal can be removed by weak nitric acid.

The manager of an aluminium company in Kentucky claims to produce pure aluminium by a process which the newspapers state consists in smelting down clay and cryolite in a water-jacketed cupola reducing furnace, it being also stated that the aluminium is reduced so freely, and gathers under the slag so well, that it is tapped from the furnace by means of an ordinary syphon-tap. These are all the particulars which have been made public. As to whether this company really does make aluminium by any such process I am unable to assert; pure aluminium has been sold by this company, but that it was made by this company, or by any such process, is very doubtful.

O. M. Thowless,† of Newark, N. J., proposes to prepare a

* Wagner's Jahresb., 1859, p. 4.

† U. S. Patent, 370,220, Sept. 20, 1887. English Patent, 14,407 (1886).

solution of aluminium chloride by dissolving precipitated aluminium hydrate in hydrochloric acid. The solution is concentrated and mixed with chalk, coal, soda, and cryolite, and the mass resulting heated in closed vessels to a strong, red heat. It is also stated that aluminium fluoride may be used instead of the chloride. The resulting fused mass is powdered and washed, when it is said that aluminium is obtained in the residue.

According to a patent granted to Messrs. Pearson, Liddon, and Pratt, of Birmingham,* an intimate mixture is made by grinding together—

100	parts	cryolite.
50	"	bauxite, kaolin or aluminium hydrate.
50	"	calcium chloride, oxide or carbonate.
50	"	coke or anthracite.

These are heated to incipient fusion in a carbon-lined furnace or crucible for two hours, when the aluminium is said to be produced and to exist finely disseminated through the mass. A mixture of 25 parts each of potassium and sodium chlorides is then to be added and the heat raised to bright redness, when the aluminium collects in the bottom of the crucible. A better utilization of the fine powder is effected by washing it, drying, and then pouring fused zinc upon it, which alloys with the aluminium and can be afterwards removed by distillation. If melted copper is used, a bronze is obtained.

H. Bessemer, jr., of Westend,† tries to utilize the principle of combustion under pressure in order to get a temperature high enough to reduce alumina by carbon or a hydrocarbon gas, the resulting aluminium vapor being rapidly cooled by passing the products of the reaction through a small aperture into a large chamber, the expansion cooling and condensing the vapor. To conduct the process, an intimate mixture of alumina and carbon is made into briquettes and put into a

* English Patent, 5,316, April 10, 1888.

† English Patent, 12,033, July 29, 1889.

strong iron vessel having a refractory lining and water-cooled externally. Air heated in regenerative stoves and gaseous fuel are forced into it at a pressure of three to four atmospheres. A very high temperature is produced, sufficient it is claimed to reduce the alumina. The products of combustion and metallic vapor pass out through a fire-clay tube of small size into a larger chamber, in which the aluminium vapor condenses.

This process appears imaginary. Heating up the inside of such a large vessel, water-cooled externally, to a temperature sufficient to cause aluminium vapor to distil out of it, is extremely problematical, especially with the means of heating employed.

Reduction by Carbon and Carbon Dioxide.

J. Morris,* of Uddington, claims to obtain aluminium by treating an intimate mixture of alumina and charcoal with carbon dioxide. For this purpose, a solution of aluminium chloride is mixed with powdered wood-charcoal or lampblack, then evaporated till it forms a viscous mass which is shaped into balls. During the evaporation hydrochloric acid is given off. The residue consists of alumina intimately mixed with carbon. The balls are dried, then treated with steam in appropriate vessels for the purpose of driving off all the chlorine, care being taken to keep the temperature so high that the steam is not condensed. The temperature is then raised so that the tubes are at a low red heat, and dry carbon dioxide, CO_2, is then passed through. This gas is reduced by the carbon to carbonic oxide, CO, which now, as affirmed by Mr. Morris, reduces the alumina. Although the quantity of carbonic oxide escaping is in general a good indication of the progress of the reduction, it is, nevertheless, not advisable to continue heating the tubes or vessels until the evolution of this gas has ceased, as in consequence of slight differences in the consistency of the balls some of them give up all their carbon

* Dingler, 1883, vol. 259, p. 86. German Patent, No. 22,150, August 30, 1882.

sooner than others. The treatment with carbon dioxide lasts about thirty hours when the substances are mixed in the proportion of 5 parts carbon to 4 parts alumina. Morris states further that the metal appears as a porous spongy mass, and is freed from the residual alumina and particles of charcoal either by smelting it, technically "burning it out," with cryolite as a flux, or by mechanical treatment.

To produce any aluminium at all by such a process and at such a low temperature, appears to me impossible.

Mr. P. A. Emanuel, of Aiken, S. C., had the idea of producing aluminium sulphide by passing carbon bi-sulphide vapor over aluminium sulphate, and then reducing it by carbonic oxide. The reactions proposed would be

$$Al_2(SO_4)_3 + 4CS_2 = Al_2S_3 + 4COS + 4SO_2$$
$$Al_2S_3 + 3CO = 2Al + 3COS.$$

It seems to me that the first reaction would be very likely to occur, because alumina alone would form the sulphide under the same conditions. The reduction equation, however, is very problematical. We do not know that carbon oxysulphide would be produced by these substances, but even if it might be formed, the reaction is thermally negative to an extent which would render a high temperature necessary. In fact, the heat deficit of the reaction is as follows:

	Calories.	Calories.
Decomposition of Al_2S_3	124400	
Decomposition of 3CO	87000	
		211400
Formation of 3COS		148100
Deficit		63300

The reaction may possibly occur at a high temperature, but I have no information that it has been experimentally accomplished.

Reduction by Hydrogen.

F. W. Gerhard * decomposes aluminium fluoride or cryolite

* Watts' Dictionary, article "Aluminium."

by subjecting them to hydrogen at a red heat. The aluminium compound is placed in a number of shallow dishes of glazed earthenware, each of which is surrounded by a number of other dishes containing iron filings. These dishes are placed in an oven previously heated to redness, hydrogen gas is then admitted and the heat increased. Aluminium then separates, hydrofluoric acid, HF, being formed, but immediately taken up by the iron filings, and thereby prevented from reacting on the aluminium. To prevent the pressure of the gas from becoming too great, an exit tube is provided, which may be opened or closed at pleasure. This process, patented in England in 1856, No. 2920, is ingenious, and some one said that it yielded good results. The inventor, however, returned to the use of the more costly reducing agent, sodium, which would seem to imply that the hydrogen method had not quite fulfilled his expectations.

(See also Comenge's processes.)

Quite recently the possibility of reducing alumina by hydrogen has been very neatly proven by Mr. H. Warren.* He took a tube of fine-quality compressed lime and put into it alumina, made by evaporating a solution of aluminium chloride to dryness and calcining. He then passed pure, dry hydrogen gas through the tube, heating the outside with an oxyhydrogen blow-pipe flame, concentrating all the heat on one spot. With a slow current of hydrogen there was no reduction, but with a brisk current some water was formed, and there were found, on cooling the tube and breaking it, distinct metallic beads around the space of greatest heating. These were detached, and found on examination to be pure aluminium. A mixture of alumina and copper oxide readily gave under these conditions aluminium bronze. Oxides of tungsten and manganese were likewise reduced, but magnesia, silica and titanic oxide were not affected.

* Chemical News, August 31, 1894, p. 102.

Reduction by Carburetted Hydrogen.

Mr. A. L. Fleury,* of Boston, mixes pure alumina with gas-tar, resin, petroleum, or some such substance, making it into a stiff paste which may be divided into pellets and dried in an oven. They are then placed in a strong retort or tube which is lined with a coating of plumbago. In this they are exposed to a cherry-red heat. The retort must be sufficiently stong to stand a pressure of from 25 to 30 lbs. per square inch, and be so arranged that by means of a safety valve the necessary amount of some hydrocarbon may be introduced into the retort among the heated mixture, and a pressure of 20 to 30 lbs. must be maintained. The gas is forced in by a force pump. By this process the alumina is reduced, the metal remaining as a spongy mass mixed with carbon. This mixture is remelted with metallic zinc, and when the latter has collected the aluminium it is driven off by heat. The hydrocarbon gas under pressure is the reducing agent. The time required for reducing 100 lbs. of alumina, earth, cryolite, or other compound of aluminium, should not be more than four hours. When the gas can be applied in a previously heated condition as well as being strongly compressed, the reduction takes place in a still shorter period.

Nothing is now heard of this process, and it has been presumably a failure. It is said that several thousand dollars were expended by Mr. Fleury and his associates without making a practical success of it. We should be glad to hear in the future that their sacrifices have not been in vain, for the process has possibilities in it which may some time be realized.

Petitjean † states that aluminium sulphide, or the double sulphide of aluminium and sodium (see p. 177), may be reduced by putting them into a crucible or retort, through the bottom of which is passed a stream of carburretted hydrogen. Some solid or liquid hydrocarbon may be placed in the bottom of the

* Chemical News, June, 1869, p. 332.

† Polytechnisches Central Blatt., 1858, p. 888.

crucible. The aluminium is said to be thus separated from its combination with sulphur. The powder must be mixed with metallic filings, as iron, and melted in order to collect the aluminium. Or, metallic vapor may be passed into the retort in place of carburetted hydrogen.

Messrs. Reillon, Montague, and Bourgerel* patent the production of aluminium sulphide (see p. 177) and its reduction by carburetted hydrogen exactly as above.

Lébédeff† fluxes alumina in a graphite crucible with fluorspar, adding a double fluoride of aluminium and sodium to reduce the specific gravity of the bath, exactly as in the present electrolytic processes. A reducing gas, as hydrogen or a hydrocarbon, is then to be led into the crucible.

This method of reducing alumina has appeared so promising to me, that, at my suggestion, Dr. Lisle, of Springfield, Ohio, made some experiments of this kind, using natural gas as the reducing agent. A graphite crucible was lined with carbon, and cryolite melted in it. Alumina was then dissolved in the bath until the cryolite was saturated. A current of heated natural gas (90 parts methane to 10 parts hydrogen) was then passed through for several hours, the temperature being a bright red. No evidences of reduction were observed. The experiment was also modified by passing in carbonic oxide, with a like result. Although these experiments were fruitless, yet I do not think that all the possibilities have been exhausted, and I heartily recommend this as a promising field for further experiment.

R. E. Green, of Southall, England,‡ modified the experiment by filling a retort with charcoal and then placing the alumina fluxed with cryolite on top. On heating, the molten salt trickles down over the carbon, while a reducing gas, hydrogen or a hydrocarbon, is sent upwards through the retort from an aperture below. Mr. Green, however, spoils his process and

* English Patent, 4576, March 28, 1887.

† German Patent, 57768 (1889).

‡ English Patent, 5914, April 6, 1889.

incidentally shows his ignorance of the properties of aluminium, by recommending the addition of silica to the alumina, or the use of some silica to make a slag. I might have been inclined to believe that some aluminium could have been produced in this retort, provided it had a carbon lining, but the addition of silica would render such a result very unlikely, or in any event, a worthless metal would be obtained.

Reduction by Cyanogen.

According to Knowles' patent,* aluminium chloride is reduced by means of potassium or sodium cyanide, the former, either fused or in the form of vapor, being brought in contact with either the melted cyanide or its vapor. The patent further states that pure alumina may be added to increase the product The proportions necessary are in general—

3	equivalents of	aluminium chloride.
3 to 9	"	potassium or sodium cyanide.
4 to 9	"	alumina.

Corbelli, of Florence,† patented the following method in England: Common clay is freed from all foreign particles by washing, then well dried. One hundred grammes of it are mixed with six times its weight of concentrated sulphuric or hydrochloric acid; then the mixture is put in a crucible and heated to 400° or 500° C. The mass resulting is mixed with 200 grammes of dry yellow prussiate of potash and 150 grammes of common salt, and this mixture heated in a crucible to whiteness. After cooling, the reduced aluminium is found in the bottom of the crucible as a button.

According to Deville's experiments, this process will not give any results. Watts remarks that any metal thus obtained must be very impure, consisting chiefly of iron.

Lowthian Bell ‡ attempted to obtain aluminium in his labora-

* Sir Francis C. Knowles, English Patent, 1857, No. 1742.

† English Patent, 1858, No. 142.

‡ Chemical Reactions in Iron Smelting, p. 230.

tory by exposing to a high heat in a graphite crucible mixtures of alumina and potassium cyanide, with and without carbon. In no case was there a trace of the metal discovered.

Reduction by Double Reaction.

M. Comenge,* of Paris, produces aluminium sulphide (see p. 177) and reduces it by heating it with alumina or aluminium sulphate in such proportions that sulphurous acid gas and aluminium may be the sole products. The mixture is heated to redness on the bed of a reverberatory furnace, in an unoxidizing atmosphere, the reaction being furthered by agitation. It is stated that the resulting mass may be treated in the way commonly used in puddling spongy iron, and afterwards pressed or rolled together. The reactions involved would be, if they occurred,

$$Al_2S_3 + 2Al_2O_3 = 6Al + 3SO_2.$$
$$Al_2S_3 + Al_2(SO_4)_3 = 4Al + 6SO_2.$$

It is also claimed that metallic alloys may be prepared by the action of metallic sulphides on aluminium sulphate; as, for instance—

$$Al_2(SO_4)_3 + 3FeS = Al_2Fe_3 + 6SO_2.$$

The sulphide is also reduced by hydrogen, iron, copper or zinc, the reactions being

$$Al_2S_3 + 6H = 2Al + 3H_2S.$$
$$Al_2S_3 + 3Fe = 2Al + 3FeS.$$

In the case of reduction by a metal, alloys are formed.

Mr. Niewerth's † process may be operated in his newly invented furnace, but it may also be carried on in a crucible or other form of furnace. The furnace alluded to consists of three shaft furnaces, the outer ones well closed on top by iron covers, and connected beneath by tubes with the bottom of the middle

* English Patent, 1858, No. 461, under name of J. H. Johnson.

† Sci. Am. Suppl., Nov. 17, 1885.

one: the tubes being provided with closing valves. These side-shafts are simply water-gas furnaces, delivering hot water-gas to the central shaft, and by working the two alternately supplying it with a continuous blast. The two producers are first blown very hot by running a blast of air through them with their tops open, then the cover of one is closed, the blast shut off, steam turned on just under the cover, and water-gas immediately passes from the tube at the bottom of the furnace into the central shaft. The middle shaft has meanwhile been filled with these three mixtures in their proper order:—

First: A mixture of sodium carbonate, carbon, sulphur and alumina.

Second: Aluminium sulphate.

Third: A flux, preferably a mixture of sodium and potassium chlorides.

This central shaft must be already strongly heated to commence the operation; it is best to fill it with coke before charging, and as soon as that is hot to put the charges in on the coke. Coke may also be mixed with the charges, but it is not necessary. The process then continues as follows: The water-gas enters the bottom of the shaft at a very high temperature. These highly heated gases, carbonic oxide and hydrogen, act upon the charges so that the first breaks up into a combination of sodium sulphide and aluminium sulphide, from which, by double reaction with the second charge of aluminium sulphate, free aluminium is produced. As the latter passes down the shaft, it is melted and the flux assists in collecting it, but is not absolutely necessary. Instead of producing this double sulphide, pure aluminium sulphide might be used for the first charge, or a mixture which would generate it; or again pure sulphide of sodium, potassium, copper, or any other metallic sulphide which will produce the effect alone, in which case aluminium is obtained alloyed with the metal of the sulphide. Instead of the first charge, a mixture of alumina, sulphur and carbon might be introduced. Or the aluminium sulphate of the second charge might be replaced by alumina. So one

charge may be sulphide of sodium, potassium or any other metallic sulphide, and the second charge may be either alumina or aluminium sulphate.

Messrs. Pearson, Turner, and Andrews * claim to produce aluminium by heating silicate of alumina or compound silicates of alumina and other bases with calcium fluoride and sodium or potassium carbonate or hydrate, or all of these together. If other metals are added, alloys are obtained.

G. A. Faurie,† of St. Denis, France, claims that by making an intimate mixture of alumina with carbon, moistening with sulphuric acid (thereby producing some sulphate) and intensely igniting the mass, aluminium is reduced, and globules of aluminium picked out of the resulting powder. Another metal may be added to produce an alloy.

Reduction in Presence of or by Copper.

Calvert and Johnson ‡ obtained copper alloyed with aluminium by recourse to a similar chemical reaction to that employed to get their iron-aluminium alloy. Their mixture was composed of—

20 equivalents of	copper	640 parts.
8 (24) "	aluminium chloride	1076 "
10 "	lime	280 "

"We mixed these substances intimately together, and after having subjected them to a high heat for one hour we found at the bottom of the crucible a melted mass covered with cuprous chloride, Cu_2Cl_2, and in this mass small globules, which on analysis contained 8.47 per cent. aluminium, corresponding to the formula—

5 equivalents of	copper	160	91.96 per cent.
1 " "	aluminium	14	8.04 "
			100.00

* English Patent, 12332, Sept. 12, 1887.

† U. S. Patent, July 22, 1890.

‡ Phil. Mag. 1855, x. 242.

"We made another mixture of aluminium chloride and copper in the same proportions as above, but left out the lime. We obtained an alloy in this case also, which contained 12.82 per cent. aluminium, corresponding to the formula—

3 equivalents of copper.....	96	87.27 per cent.
1 " " aluminium.....	14	12.73 "
		100.00

M. Evrard,* in order to make aluminium bronze, makes use of an aluminous pig-iron. (It is not stated how this aluminous pig-iron is made.) This is slowly heated to fusion, and copper is added to the melted mass. Aluminium, having more affinity for copper than for iron, abandons the latter and combines with the copper. After the entire mass has been well stirred, it is allowed to cool slowly so as to permit the bronze, which is heavier than iron, to find its way to the bottom of the crucible. M. Evrard makes silicon bronze in the same way by using siliceous iron.

Benzon† has patented the reduction of aluminium with copper, forming an aluminium-copper-alloy. He mixes copper, or oxidized copper, or cupric oxide, in the finest possible state, with fine, powdered, pure alumina and charcoal, preferably animal charcoal. The alumina and copper or copper oxide are mixed in equivalent proportions, but an excess of charcoal is used. The mixture is put in a crucible such as is used for melting cast-steel, which is lined inside with charcoal. The charge is covered with charcoal, and the crucible subjected first to a temperature near the melting point of copper, until the alumina is reduced, and then the heat is raised high enough to melt down the alloy. In this way can be obtained a succession of alloys, whose hardness and other qualities depend on the percentage of aluminium in them. In order to obtain alloys of a certain composition, it is best to produce first an alloy of the highest attainable content of aluminium, to analyze it, and then

* Annales du Genie Civil, Mars, 1867, p. 189.

† Eng. Pat. 1858, No. 2753.

melt it with the required quantity of copper. The same process can be used for the reduction of alumina with iron or ferric oxide, only the carbon must in this case be in greater excess, and a stronger heat kept up longer must be used than when producing the copper-aluminium alloy. In contact with ferric oxide the alumina is more easily reduced than with the metallic iron.

Benzon further remarks that some of these alloys, as the ferro-aluminium, may be subsequently treated so as to separate out the metallic aluminium; also that the iron alloy may be mixed with steel in the melting pot, or suitable proportions of alumina and carbon may be put into the melting pot. The iron alloy may be useful for many purposes, especially in the manufacture of cast-steel.

The question opened up by Benzon's statements is whether carbon reduces alumina in presence of copper. This has been the subject of many careful experiments, and the verdict of the most reliable observers is that at ordinary furnace temperatures it does not. This principle has been the subject of numerous patents, and before presenting the negative evidence on this point we will review the claims made in these patents.

G. A. Faurie * states that he has succeeded in obtaining aluminium bronze by taking two parts of pure, finely-powdered alumina, making it into a paste with one part of petroleum, and then adding one part of sulphuric acid. When the yellow color is uniform and the mass homogeneous, sulphur dioxide begins to escape. The paste is then wrapped up in paper and thrown into a crucible heated to full redness, where the petroleum is decomposed. The calcined product is cooled, powdered and mixed with an equal weight of a metal in powder, *e. g.*, copper. This mixture is put into a graphite crucible and heated to whiteness in a furnace supplied with blast. Amidst the black, metallic powder are found buttons of aluminium alloy. In an English patent,† by Mr. Faurie, it is further

* Comptes Rendus, **105**, 494; Sept. 19, 1887.

† English patent 10,043, Aug. 18, 1887.

claimed that by making bricks out of the calcined alumina mixture and alloying metal, and using similar bricks of lixiviated soda ashes mixed with tar for flux, the reduction can be effected in a cupola.

Bolley,* at his laboratory in Zurich, and List,† at the royal foundry at Augsburg, have shown that by following the process claimed by Benzon the resulting copper contained either no aluminium, or at most a trace.

In an experiment made by the author to test this point—

40	grammes of	copper oxide and copper,
5	"	alumina,
5	"	charcoal,

were intimately mixed and finely powdered, put in a white-clay crucible and covered with cryolite. The whole was slowly heated to bright redness, and kept there for two hours. A bright button was found at the bottom of the crucible. This button was of the same specific gravity as pure copper, and a qualitative test showed no trace of aluminium in it. A friend of mine, Dr. Lisle, has repeated this experiment, taking the metal produced and returning it to another operation and repeating this four times, but the resulting button scarcely showed a trace of aluminium.

Dr. W. Hampe has also made an experimental test of this subject with the following conclusions:‡—

"The reduction of alumina by carbon, although often patented, is on thermo-chemical grounds highly improbable; but since aluminium in alloying with copper, especially in the proportions 9.7 parts of the former to 90.3 parts of the latter ($AlCu_4$), evolves much heat, it might be possible that the reaction

$$Al_2O_3 + 3C + 8Cu = 2AlCu_4 + 3CO$$

is exothermic. I therefore mixed alumina with the necessary

* Schweizer Polytechnisches Zeitschrift, 1860, p. 16.

† Wagner's Jahresbericht, 1865, p, 23.

‡ Chemiker Zeitung (Cöthen), xii. p. 391 (1888).

quantity of lamp-black and copper, in other cases evaporated together to dryness solutions of aluminium and copper nitrates, afterwards igniting them to oxides and adding the necessary amount of carbon. These mixtures were put into gas-carbon crucibles contained within plumbago pots with well-luted covers, and heated in a Deville blast-furnace to a temperature sufficient to frit together the quartz sand with which the space between the two crucibles had been filled. In no case was there a trace of aluminium produced, nor did the addition of any flux for the alumina affect the result in any way."

The possibility of reducing aluminium sulphide by copper has been generally decided affirmatively. M. Comenge claimed that it was possible (see p. 411), Reichel * also stated unreservedly that copper fillings performed the reduction at a high temperature. In an experiment by the author, copper foil was used instead of copper filings, the latter not being immediately at hand, and the result was negative. As a similar test with iron filings gave a good result, it seems quite probable that copper would have performed the reduction under proper conditions.

Andrew Mann,† of Twickenham, patents a process which may be stated briefly as follows: Aluminium sulphate is mixed with sodium chloride and heated until a reaction begins to take place. The mass is mixed intimately with lime, and to this mixture aluminium sulphate and ground coke added. This is calcined, the powder mixed with a metal, as copper, and melted down, In this case the slags are calcium sulphide and copper chloride, while aluminium bronze is obtained.

L. Q. Brin, of Paris,‡ claims to produce aluminium bronze by the following process: Sheet copper is cleaned by pickling and then covered with a mixture of 2 parts borax, 2 parts common salt, and 1 part sodium carbonate, made into paste

* Journal für Pr. Chemie, xi. p. 55.

† English Patent, 9313, June 30, 1887; German Patent, 45755, Dec. 20, 1887.

‡ English Patents, 3547–8–9, March 7, 1888; U. S. Patent, 410574, Sept. 10, 1889.

with water. The metal is then put into a reverberatory furnace, heated to bright redness, and vapors of aluminium chloride led over it, carried in by a current of inert gas. (It is stated that the vapors of aluminium chloride are produced by heating in a retort a mixture of clay, salt and fluorspar.) The aluminium compound is said to be decomposed, and the nascent aluminium to combine with the copper, forming 1½ to 2 per cent. bronze at one operation, and by using this over it may be enriched to any extent desired. In a modification of this method, the coating put on the metal contains clay or other earth rich in alumina. It is also stated that the metal thus coated can be put into a cupola with alternate layers of fuel and run down to an alloy.

Reduction by or in Presence of Iron.

M. Comenge claims that aluminium sulphide is reduced by iron (see p. 411); the statement is repeated by a writer in the "Chemical News," 1860; F. Lauterborn* states that the reduction takes place at a red heat; Reichel† also records his success in this reaction; finally, the author has obtained encouraging results.‡ I used a product containing 32.3 per cent. of aluminium sulphide. On mixing this intimately with fine iron filings, and subjecting to a high heat for one and a half hours, the product was a loose powder in which were small buttons of metal. They were bright, yellower than iron, and contained by analysis 9.66 per cent. of aluminium.

H. Niewerth§ has patented the following process: "Ferrosilicon is mixed with aluminium fluoride in proper proportions and the mixture submitted to a suitable red or melting heat by which the charge is decomposed into volatile silicon fluoride (SiF_4), iron and aluminium, the two latter forming an alloy. In order to obtain the valuable alloy of aluminium and copper

* Dingler, 242, 70.

† Jrnl. für Pr. Chemie, xi. 55.

‡ Graduating Thesis, Lehigh University, June, 1886.

§ Sci. Am. Suppl., Nov. 17, 1883.

from this iron aluminium alloy, the latter is melted with metallic copper, which will then by reason of greater affinity unite with the aluminium, while the iron will retain but an insignificant amount of it. On cooling the bath, the bronze and iron separate in such a manner that they can readily be kept apart. In place of pure aluminium fluoride, cryolite may advantageously be employed, or aluminium chloride may also be used, in which case silicon chloride volatilizes instead of the fluoride. Or again, pure silicon may be used with aluminium fluoride, cryolite, or aluminium chloride, in which case pure aluminium is obtained."

Mr. W. P. Thompson* has taken out a patent in England† for the manufacture of aluminium and similar metals, which is carried out as follows: "The inventor employs as a reducing agent iron, either alone or conjointly with carbon or hydrogen. The operation is effected in an apparatus similar to a Bessemer converter, divided into two compartments. In one of these compartments is placed melted iron, or an alloy of iron, which is made to run into the second by turning the converter. This last compartment has two tuyeres, one of which serves to introduce hydrogen, while by the other is introduced either aluminium chloride, fluoride, double chloride or double fluoride, with sodium, in liquid or gaseous state. In the presence of the hydrogen, the iron takes up chlorine or fluorine, chloride or fluoride of iron is disengaged, and aluminium mixed with carbon remains as a residue. Then this mixture of iron, aluminium and carbon is returned to the other compartment, where the carbon is burnt out by means of a current of air. The mass being then returned to the chamber of reduction, the operation described is repeated. When almost all the iron has been consumed, the reduction is terminated by hydrogen alone. There is thus obtained an alloy of iron and aluminium. (The preparation of sodium does not require the intervention of hydrogen. A mixture of iron with an excess of carbon and

* Bull. de la Soc. Chem. de Paris, 1880, xxiv. 719.

† March 27, 1879, No. 2101.

caustic soda (NaOH) is heated in the converter, when the sodium distils off. When all the carbon has been burnt, the iron remaining as a residue may be converted into Bessemer steel. As iron forms an alloy with potassium, the method would scarcely serve for the production of that metal.) To obtain the pure aluminium, sodium is first prepared by the process indicated, the chloride or fluoride of aluminium is introduced into the apparatus in the other chamber, when the metal is reduced by the vapor of sodium. The chambers ought to be slightly inclined, and an agitator favors the reaction. The inventor intends to apply his process to the manufacture of magnesium, strontium, calcium and barium."

That aluminium could be produced at all by the above reactions is very improbable; it is not likely that the reactions were even seriously tested.

Calvert and Johnson * made experiments on the reduction of aluminium by iron, and the production thereby of iron-aluminium alloys. We give the report in their own words:—

"We shall not describe all the fruitless efforts we made, but confine ourselves only to those which gave satisfactory results. The first alloy we obtained was by heating to a white heat for two hours the following mixture:—

8	equivalents of	aluminium chloride	1076 parts.
40	"	iron filings	1120 "
8	"	lime	224 "

"The lime was added to the mixture with the view of removing the chlorine from the aluminium chloride, so as to liberate the metal and form fusible calcium chloride, $CaCl_2$. Subtracting the lime from the above proportion, we ought to have obtained an alloy having the composition of 1 equivalent of aluminium to 5 equivalents of iron, or with 9.09 per cent. of aluminium. The alloy we obtained contained 12 per cent., which leads to the formula $AlFe_4$. This alloy, it will be noticed, has an analogous composition to the one we made of iron and

*Phil. Mag., 1855, x. 240.

potassium, and like it was extremely hard, and rusted when exposed to a damp atmosphere. Still it could be forged and welded. We obtained a similar alloy by adding to the above mixture some very finely pulverized charcoal and subjecting it to a high heat in a forge furnace for two hours. This alloy gave on analysis 12.09 per cent.* But, in the mass of calcium chloride and carbon remaining in the crucible there was a large amount of globules varying in size from a pin-head to a pea, as white as silver and extremely hard, which did not rust in the air or in hyponitric fumes. Its analysis gave 24.55 per cent. aluminium; the formula Al_2Fe_3 would give 25 per cent. Therefore this alloy has an analogous composition to alumina, iron replacing oxygen. We treated these globules with weak sulphuric acid, which removed the iron and left the aluminium, the globules retaining their form, and the metal thus obtained had all the properties of the pure aluminium.

"We have made trials with the following mixtures, but although they have yielded results, still they are not sufficiently satisfactory to describe in this paper, which is the first of a series we intend publishing on alloys. This mixture was:—

Kaolin	1750 parts.
Sodium chloride	1200 "
Iron	875 "

"From this we obtained a metallic mass and a few globules which we have not yet analyzed."

(See also Benzon's process, p. 414.)

M. Chenot,† on the occasion of Deville's first paper on aluminium being read to the French Academy, Feb. 6, 1854, announced that in 1847, by reducing earthy oxides by means of metallic sponges, he had obtained a series of alloys containing up to 40 per cent. of the earth metals. He cited from a

* In the original paper it is given as 12.09 per cent. iron. The inference is unavoidable that this was a misprint, but it is not corrected in the Errata at the end of the volume.

† Comptes Rendus, xxxviii, 415.

memoir presented by him to the "Sociètè d'Encouragement," in 1849, in which he had said, "on taking precipitates of the earths, they are all reduced by the metallic sponge (*e. g.*, that formed by reducing iron oxide in a current of carbonic oxide gas). In this manner I have made barides, silicides, aluminides, etc., all of which are beautiful silver-white, very hard and unoxidizable in air or in contact with acid vapors. They are fusible, can be cast, and work perfectly under the hammer."

Faraday and Stodart* made an exhaustive investigation on the preparation of iron-aluminium alloys, being started on this line by finding that Bombay "wootz" steel contained 0.0128 to 0.0695 per cent. of aluminium, while no metals of the earths were to be found in the best English steels. This led to the conclusion that the peculiar properties of the former, especially the "damasceening," were due to the small amount of aluminium. These scientists commenced by taking pure steel or sometimes good soft iron and intensely heating it for a long time imbedded in charcoal powder. Carbides were thus formed, having a very dark gray color, and highly crystalline. Average analysis of this product gave 5.64 per cent. carbon. This was broken and powdered in a mortar, mixed intimately with pure alumina, and heated in a closed crucible for a long time at a high temperature. An alloy was obtained of a white color, close granular texture and very brittle, containing 3.41 per cent. of aluminium, with some carbon.

When 40 parts of this alloy were melted with 700 parts of good steel (introducing 0.184 per cent. of aluminium) a malleable button was obtained which gave a beautiful damask on treatment with acids; while 67 parts of the alloy with 500 of steel (introducing 0.4 per cent of aluminium) gave a product which forged well, gave the damask and "had all the appreciable characters of the best Bombay wootz." This appears to be very strong synthetic evidence that alumina is reduced to a small extent even in the rude hearths in which the Indian steel is manufactured. Karsten, however, could not find weighable

* Quarterly Journal, ix. 320.

quantities of aluminium in specimens of wootz, nor could Henry, a very expert analyst. The latter suggested that Faraday was misled by the alumina contained in intermingled slag, yet the latter obtained alumina without silica in his analyses.

In the light of more recent developments we would accept Faraday's results as being very near the truth in the matter.

Ledebuhr* quotes an analysis made by Grüner in which 0.50 per cent. of aluminium was found in cast-iron containing besides 2.30 per cent. of carbon and 2.26 per cent. of silicon. This would tend to show that under certain conditions iron takes up aluminium in the blast-furnace. Karsten, however, in his many analyses of malleable iron, steel and cast-iron, only found aluminium in unweighable quantities. Grüner and Lau† stated that aluminium is reduced in small quantities in the blast furnace if the temperature is high and the slag basic; a large addition of lime thus increases the reduction of alumina and hinders that of silica. Most pig irons contain very small amounts of aluminium, but some English varieties contain 0.5 to 1.0 per cent. and several Swedish pig irons 0.75 per cent. Schafhäutl‡ found as much as 1.01 per cent of aluminium in a gray iron, and was led to consider silicide of iron and aluminide of iron as characteristic components of gray iron. Lohage§ states that adding alumina in the manufacture of cast-steel has a great influence on the grain and lustre of the steel, the effect being doubtless due to a minute quantity of aluminium taken up. Silicates of magnesium and aluminium are formed at the same time, and separating out, float on the surface of the molten steel. Corbin‖ reports 2.38 per cent. of aluminium in chrome steel; but Blair,¶ of Philadelphia, found no more aluminium in chrome than in other steels. This chemist has examined many

* Handbuch der Eisenhüttenkunde, p. 265.

† Berg u. Hüttenmännische Zeitung, 1862, p. 254.

‡ Erdman's Journal fr. Pr. Chemie, lxvii. 257.

§ Berg u. Hüttenmännische Zeitung, 1861, p. 160.

‖ Silliman's Journal, 1869, p. 348.

¶ H. M. Howe, E. and M. J., Oct. 29, 1887.

irons and steels particularly for aluminium, and reports that nearly always it exists as such in steel, but never more than a few thousandths of 1 per cent., say 0.032 per cent as a maximum. He has further been unable to connect its presence with any peculiarity in the properties of the metal or its mode of manufacture.

G. H. Billings,* of the Norway Iron Works, Boston, made the following experiment on reducing alumina in contact with iron:—A soft iron was used containing a trace of sulphur and phosphorus, no manganese and only 0.08 per cent. of carbon. The mixture was made of

12 parts emery.
18 " alumina.
1 " pulverized charcoal.
36 " fine iron turnings.

These were mixed thoroughly, and heated to whiteness for 48 hours. The melting resulting showed a solid, homogeneous fracture with a fine crystalline structure resembling steel with 1 per cent. of carbon, and contained on analysis

0.20 per cent. of carbon.
0.50 " aluminium.

It was also found that if this quantity of aluminium was added to a pot of molten iron, the product obtained exhibited the same characteristics as the above.

Another attempt to produce iron-aluminium alloys directly is stated in E. Cleaver's patent specifications as follows: † Four parts of aluminium sulphate in solution are mixed with one part of lamp-black, the mixture dried and heated to the highest temperature attainable by using coal-gas and oxygen in a lime-lined furnace similar to those used for melting platinum. Excess of reducing gas is maintained. The charge is cooled in the furnace, removed, mixed with twenty-times its weight of finely-divided cast-iron, and fused in a steel melting

* Transactions American Inst. Mining Engineers, 1877, p. 452.

† English Patent, 1276, Jan. 26, 1887.

furnace. If copper is used, a bronze results. The alloying metal may be added in the gas furnace, but this is not recommended as economical. This inventor also claims that aluminium ferrocyanide, either alone or with carbon, can be decomposed in the above-described gas furnace, yielding a rich iron-aluminium alloy. As a higher heat than before is needed, it is recommended that the oxygen be previously heated. The principal difficulty in this latter process would apparently be to procure the aluminium ferrocyanide to operate on.

Mr. Ostberg,* connected with the Mitis process for making wrought-iron castings, stated that the ferro-aluminium used in that process in Sweden was made by adding clays to iron in process of smelting, that it contained 7 to 8 per cent. of aluminium, and could be made very cheaply. Inquiries made for further particulars about this process have received no satisfactory reply, and there is no outside confirmation of the above statement to be found.

Brin Bros. claim that they can alloy aluminium in small quantities with iron (see p. 417). Besides the processes described as most suitable for producing bronze, they also state that if soft strap-iron is coated with the flux composed of clay and salt and heated to over 1000° C. in a muffle or a blowpipe flame, the iron absorbs aluminium and becomes tough and springy, having many of the properties of steel. They also claim that by simply charging broken lumps of cast-iron into a cupola with alternate layers of common clay and a flux, the metal run down contains as much as 1.75 per cent. of aluminium, yielding a very fluid, strong iron, which runs into the thinnest castings. The London papers state that the alloys thus produced assuredly contain aluminium, and that the contained aluminium does not cost over 25 cents per lb.

A newspaper report speaks of exactly similar processes being operated by an aluminium company in Kentucky. (See also p. 403.) It is said that they charge a cupola with scrap-iron, pig-iron, coke, clay, and a flux, and that on melting the

* Engineering and Mining Journal, May 15, 1886.

charge down and pouring, the castings produced are similar to the best steel, the fracture of the metal being white, slightly fibrous, and free from blow-holes. It is stated, further, that the castings, on analysis, contained 1.7 per cent. of aluminium. Scrap-iron is also treated in the same way as reported by Brin Bros., being simply coated with a pasty mixture of clay and a flux and heated almost white-hot, when the iron absorbs aluminium.

The Aluminium Process Company of Washington, D. C., own several patents granted to W. A. Baldwin, of Chicago, Ill. In one of these,* a bath is formed by fusing together 4 parts of ground clay, 12 parts of common salt and 1 part of charcoal powder. The metal to be alloyed, *e. g.*, an iron bar, is thrust into the bath, which is not hot enough to melt it, and allowed to remain some time, with occasional stirring, until the alloying is complete. In the case of metals with low fusing points the metal may be melted with the mixture. It is claimed that the metal takes up a small percentage of aluminium. With a more highly aluminous material than clay, the proportions of salt and carbon are to be increased proportionately. In a modification of this process adopted for foundry practice,† a mixture of clay, salt and carbon, similar to the above, is put into a large ladle and the molten iron tapped directly from the cupola on to it. A brisk stirring up of the iron takes place, much scum rises to the surface, and the resulting iron is more fluid, can be carried further before setting, and makes sounder and stronger castings than similar iron not treated. The resulting iron does not contain enough aluminium to be detected by quantitative analysis. Old-fashioned fluxes used long ago in foundries were similar in composition to this mixture used by Baldwin, and were found efficacious in freeing dirty iron from slag and other impurities. It is hard to see how this latter process is anything but the use of a common flux, with a different explanation as to how it acts—the explanation being probably the most ques-

* English Patent, 2584, Feb. 21, 1888.

† U. S. Patent, 380161, March 27, 1888.

tionable part of the whole. The first-mentioned process, however, has the merit of novelty, and pieces of poor iron treated by it are made springy and much like steel, but whether this is due to absorption of aluminium is doubtful.

The Williams Aluminium Company, of New York City (works at Newark, N. J.), manufacture an alloy which they call aluminium-ferro-silicon and sell for foundry use. When first introduced, this alloy was represented to contain 10 per cent. of aluminium, but several analyses disproved this, and afterwards the alloy was sold simply on the guarantee of what it would accomplish. The metal since sold by this company does contain a small amount of aluminium, and its action on poor foundry iron is similar to that of other brands of ferro-aluminium; therefore, as long as no certain percentage of aluminium is now claimed, the company is certainly doing a legitimate business. (For method of using, etc., see Chap. XVI.) The alloy is made by melting down a mixture of iron filings, clay, salt, charcoal, and another flux whose composition is not divulged. This is put into cast-iron pots and the whole charge, crucibles and all, run down in a furnace of peculiar design constructed by Mr. Williams. The capacity of the plant is about 1000 lbs. of alloy a day, which is broken by small stamps into pieces of about an inch diameter and sold at 10 cents per lb. Mr. Williams also experimented on manufacturing aluminium bronze by the same methods, and a sample piece forwarded the author contained a small percentage of aluminium.

G. Bamberg, London,* claims to produce alloys of aluminium by taking iron or copper rich in silicon, putting them molten into a Bessemer converter, raising the temperature by blowing air through in the usual way, and then passing in vapors of aluminium chloride or aluminium-sodium double chloride.

Mr. Chas. T. Holbrook, connected with the well-known

* English Patent, 7666, May 8, 1889.

iron-masters Marshall Brothers, of Philadelphia, has reported the existence of aluminium in the pig-iron made at the Marshall furnace, Newport, Perry county, Pa. Mr. Holbrook has made many tests on the effect of adding aluminium to cast-iron, and on one occasion, happening to see pig-iron being tapped from this furnace, he remarked that it flowed as if it contained aluminium, judging by its bright, silvery appearance. An analysis of the pig-iron was at once made, and confirmed this opinion by showing 0.267 per cent. Since then, numerous analyses have shown an average of 0.20 to 0.50 per cent., while for a short period, when the furnace was working much hotter than usual, over one per cent. has been obtained. The question as to what circumstances favor this considerable reduction of alumina is probably to be referred to the nature of the combination in which it occurs in the ores. It is found, for instance, that when using ores from the Juniata Valley, the iron was richer in aluminium than when a larger amount of ore from a distance was used. The composition of the local ores is therefore of interest, and the following are copied from a letter of Mr. Holbrook's: *

	Grafton Fossil Ore. (Dried at 100° C.)	Juniata Hematite (Dried at 100° C.)
Silica	10.680	17.580
Alumina	12.469	5.692
Ferric oxide	73.481	61.133
Manganese oxide	0.431	0.700
Phosphoric acid	1.170	0.895
Sulphuric acid	none	none
Lime	trace	trace
Magnesia	none	none
Combined water and organic matter	2.700	10.700
	100.931	96.700

The pig-iron made contains 3 to 5 per cent of silicon, and is a first-class foundry iron.

Most aluminium was reduced when using the Grafton ore, and it appears in this ore the alumina is present in a much

* Iron Age, June 11, 1891.

larger proportion than it could be if combined with silica alone. In other words, if the silica were all present as ordinary clay, it could not be combined with over 9 per cent. of alumina. It is to me a very probable conclusion that the ore either contains free alumina, or possibly, some *Hercynite*, the aluminate of iron, $FeO.Al_2O_3$. This compound would evidently reduce to an iron-aluminium alloy. Whatever be the real reason for it, the fact remains that this is a real instance of aluminium being reduced from alumina in the presence of iron, at the temperature of a blast furnace of moderate size. This temperature probably never exceeds 2000° C.

Pearson and Pratt* have patented the following means for facilitating the reduction of aluminium in the iron blast-furnace. Calcined iron ore is mixed with a considerable quantity of clay and the necessary amount of coke, and charged into a blast-furnace with fluorspar for a flux instead of limestone. Cast-iron containing aluminium results.

Reduction by or in Presence of Zinc.

M. Bekétoff,† was not able to reduce vapor of aluminium chloride by vapor of zinc, although silicon chloride under the same conditions was readily reduced.

M. Dullo‡ observes that the double chloride of aluminium and sodium, which he makes directly from clay, may be reduced by zinc. He says, "The reduction by zinc presents no difficulties, but it is less easy than with sodium. An excess of zinc should be employed, which may be got rid of afterwards by distillation. The metal thus prepared possesses all the characteristics and all the properties of that obtained from bauxite with sodium."

M. N. Basset,§ a chemist in Paris, patented a somewhat sim-

* English Patent, 18048, Nov. 12, 1889.

† Bulletin de la Société Chemique, 1857, p. 22.

‡ Bull. de la Soc. Chem., 1860, v, 472.

§ Le Genie Industriel, 1862, p. 152.

ilar process for obtaining aluminium. If the statements are correct they are of great value. The paper is as follows:

"All the metalloids and the metals which form by double decomposition proto-chlorides or sesqui-chlorides more fusible or more soluble than aluminium chloride may reduce it or even aluminium-sodium chloride. Thus, arsenic, bismuth, copper, zinc, antimony, mercury, or even tin or amalgam of zinc, tin, or antimony may be employed to reduce the single or double chloride. The author employs zinc in preference to the others in consequence of its low price, the facility of its employment, its volatility, and the property which it has of metallizing easily the aluminium as it is set free. When metallic zinc is put in the presence of aluminium-sodium chloride, at 250° C. to 300° C., zinc chloride, $ZnCl_2$, is formed and aluminium is set free. This dissolves in the zinc present in excess, the zinc chloride combines with the sodium chloride, and the mass becomes little by little pasty, then solid, while the alloy remains fluid. If the heat is now raised, the mass melts anew, the zinc reduces a new portion of the double chloride and the excess of zinc enriches itself in aluminium proportionately. These facts constitute the basis of the following general process: One equivalent of aluminium chloride is melted, two of sodium chloride added, and when the vapors of hydrochloric acid are dissipated, four equivalents of zinc, in powder or grain, are introduced. The zinc melts rapidly, and by agitation the mass of chloride thickens and solidifies. The mass is now composed of the chlorides of aluminium, zinc and sodium, and remains in a pasty condition on top of the fluid zinc containing aluminium. This pasty mass is removed, piled up in a crucible or in a furnace, and bars of the fluid alloy of zinc and aluminium obtained from a previous operation are placed on top of it. This is gradually heated to bright redness, and kept there for an hour. The melted mass is then stirred with a rake and poured out. It is an alloy of the two metals in pretty nearly equal proportions. This alloy, melted with some chloride from the first operation, furnishes aluminium containing only a small

per cent. of zinc, which disappears by a new fusion under aluminium chloride mixed with a little fluoride, providing the temperature is raised to a white heat and maintained till the cessation of the vapors of zinc, air being excluded.

"The metal is pure if the zinc employed contained no foreign materials or metals. In case the zinc contains iron, or even if the aluminium chloride contains some, the metallic product of the second operation may be treated with dilute sulphuric acid to remove it. The insoluble residue is washed and melted layer by layer with fluorspar or cryolite and a small quantity of aluminium-sodium chloride, intended solely to help the fusion."

Mr. Wedding,* makes the following remarks on this process:

"It is some time since Mr. Basset established the possibility of replacing sodium by zinc in the manufacture of aluminium. Operating on aluminium-sodium chloride with granulated zinc, the reduction takes place towards 300°. The reduced aluminium dissolves in the excess of zinc, while the zinc chloride formed combines with the sodium chloride, forming a pasty mass if the heat is not raised. Under the action of heat the alloy enriches itself in aluminium, because the zinc volatilizes. The zinc retained by this alloy is completely eliminated by fusion with double chloride and a little fluorspar. The temperature ought to be pushed at least to a white heat, and maintained till no vapor of zinc escapes, air being excluded during the operation. These results I have confirmed, having submitted the experiments of Mr. Basset to an attentive examination, and I recommend its use. However, the process demands very much precaution, because of the high temperature which it necessitates. Another chemist, Mr. Specht, even in 1860 decomposed aluminium chloride by zinc, and has the same report to make—that he thinks the process will be sometime advantageously practised on a large scale."

The author made the following experiment to determine if cryolite would be reduced by zinc: One pound of finely pow-

* Journal de Pharm. [4] iii. p. 155 (1866.)

dered cryolite was melted in a graphite crucible, and 6 ounces of granulated zinc dropped into it. No perceptible reaction took place except the volatilization of zinc when the crucible was uncovered, and the metal obtained after 15 minutes' treatment contained on analysis 0.6 per cent. of aluminium.

Mr. Fred J. Seymour * patented the reduction of aluminium by zinc, making the following claim: An improvement in extracting aluminium from aluminous earths and ores by mixing them with an ore of zinc, carboniferous material and a flux, and subjecting the mixture to heat in a closed resort, whereby the zinc is liberated, is caused to assist in bringing or casting down the aluminium in a metallic state, and the alloy of aluminium and zinc is obtained.

A furnace was put up in the early part of 1884, somewhere in the vicinity of Cleveland, in a description of which by a newspaper correspondent we are told that steel retorts were charged with a mixture of zinc ore 100 parts, kaolin 50, carbon (either anthracite coal or its equivalent of some hydrocarbon) 125, pearlash 15, common salt 10: the heat necessary being about 1400° C. In a second patent,† Mr. Seymour claimed that by heating the same mixture in a retort and introducing air he volatilized oxides of aluminium and zinc, which were caught in a condenser, mixed with carbon, and reduced in a crucible. Immediately after the issue of this patent, the American Aluminium Company was organized in Detroit with a capital stock of $2,500,000 to operate the patents of a Dr. Smith, under whose name processes similar to the above had been patented in Great Britain and France. A works was then started at Findlay, Ohio, using natural gas for fuel. A gentleman who saw the plant described it as a reverberatory furnace into which a charge of 800 lbs. of zinc ore, 900 of native alum, and 300 of charcoal was put. On heating very strongly by gas with plenty of air admitted, zinc oxide was volatilized (Mr. Sey-

* U. S. Pat., No. 291631, Jan. 8, 1884.

† U. S. Patent, 337,996, March 16, 1886.

mour claimed that it carried alumina with it), and was condensed by passing the gases through large copper condensers. This fume was then collected, mixed with carbon and a metal, and run down in a crucible to an alloy. It was claimed that the plant had a capacity of 600 lbs. of pure aluminium a day, and had presumably been in operation over a year, yet there was not over 20 lbs. of alloys or ½ lb. of pure aluminium to show for it. On closer inspection so plain indications of fraud were visible in the last part of the operation that, although veritable aluminium alloys were taken out of the crucible, the gentlemen referred to refused to believe that the aluminium was produced in the process. As the sequel to this it can be stated that in the middle of 1889 the executive committee for the stockholders, being fully satisfied of the worthlessness of the process, called for a meeting to wind up the company. One month later Mr. Seymour died. The story went the rounds of the daily press that the one metallurgist who commanded the secret of obtaining cheap aluminium had died, taking the talisman with him, and a vivid picture was drawn of the manner in which the secret had been preserved by means of twelve-foot palisades, double-bolted doors, and by working at the midnight hour. Alas, the secret was out one month before he died!

A method of reducing cyanide of aluminium by means of zinc is the subject of a patent granted F. Lauterborn.* Fourteen parts of aluminium sulphate dissolved in twice its weight of water is precipitated by thirteen parts of ferro-cyanide of potassium dissolved in four times its weight of water; the precipitate of ferro-cyanide of aluminium is collected and dried. This substance is then mixed with slightly less than one-half its weight of dry, anhydrous sodium carbonate, put in a crucible and ignited with as little admission of air as possible. The ferro-cryanide is decomposed, iron carbide separates out, and besides sodium cyanate, the double cyanide of aluminium and

* German Patent, 39915 (1887).

sodium ($Al_2Cy_6+3NaCy$) is obtained as a melted mass which is poured away from the heavier iron carbide at the bottom of the crucible. If two parts of this salt are then ignited with one part of zinc in a covered crucible, aluminium separates as a regulus, while double cyanide of sodium and zinc remains as slag. The slag is dissolved in water and treated with metallic iron, whereby metallic zinc is precipitated out and a solution of ferro-cyanide of soda remains and can be used over in the process.

I do not know whether Lauterborn has ever succeeded in carrying out this process; it would appear at the very beginning that the precipitation of aluminium ferro-cyanide, although appearing *á priori* possible, has always been found impracticable, alumina being precipitated.

J. Clark, of Birmingham, England, has taken out several patents in England and one in Germany. In the first,* hydrated aluminium chloride is to be mixed with lime, iron, zinc, ammonia, or any other substance which combines readily with chlorine, and finely divided coke. After drying the mixture it is introduced into the iron blast furnace or blown into the Bessemer converter, an iron-aluminium alloy being thus produced. In a second patent,† hydrated aluminium chloride is to be mixed with 2½ parts of granulated zinc and 1 part of iron turnings or borings, or the alloy of the zinc and iron known as "zinc dross" might be used. The mass is let stand 24 hours and dried. The orange-colored powder resulting is mixed with borax (!) or any suitable flux, and put in a crucible with 20 parts of fine granulated copper and melted down. After about an hour the zinc and iron present have probably volatilized as chlorides, while aluminium bronze remains. When the copper is to be alloyed in large quantities, it may be melted on the hearth of a reverberatory furnace and the prepared powder stirred into it.

* English Patent, 15946, Dec. 6, 1886.

† English Patent, 10594, Aug. 18, 1886; German Patent, 40205, (1887).

Dr. J. D. Lisle, of Springfield, Ohio, made the following experiments in reducing aluminium sulphide by zinc. The sulphide was made in a crucible, mounted on trunnions to keep the contents agitated, in which alumina was placed and treated with superheated carbon bi-sulphide vapor. While the contents were still hot, solid or melted zinc was put into it, the heating continued, the crucible constantly agitated and a current of hydrocarbon gas led into the crucible through a hole in the cover. The outcoming gas contained some sulphuretted hydrogen, seeming to show that reduction was accomplished partially, at least, by the hydrocarbon. After heating about half an hour the openings were sealed up and the apparatus cooled. The product was analyzed, and the result of nine experiments gave results varying from 1.06 to 10 per cent. of aluminium present in the zinc. The richest alloy was distilled carefully, leaving aluminium which analyzed 98 per cent. pure and contained only a trace of zinc. It is difficult, however, to see any possibility of a commerical process being worked up on these lines which could compete with the present methods of extraction.

G. Bamberg, of London,* claims that if metallic zinc is vaporized it will reduce the vapor of aluminium chloride. He puts metallic zinc in a retort heated sufficiently to distil off zinc vapor, and in another retort is placed aluminium chloride or aluminium-sodium chloride. The vapors mix in a third highly heated chamber, in which they react, and there is condensed an alloy rich in aluminium. This is heated to whiteness in another retort to distil off the zinc.

Reduction by Lead.

According to the invention of Mr. A. E. Wilde,† of Notting Hill, lead or sulphide of lead, or a mixture of the two, is melted, and in a molten state poured upon dried or burnt alum. The

* English Patent, 7667, May 8, 1889.

† Sci. Am. Suppl., Aug. 11, 1887.

crucible in which the mass is contained is then placed in a furnace and heated, with suitable fluxes. The metal, when poured out of the crucible, will be found to contain aluminium. The aluminium and lead can be subsequently separated from each other by any known means, or the alloy or mixture of the two metals can be employed for the various useful purposes for which lead alone is more or less unsuited.

Reduction by Manganese.

Walter Weldon * claimed to melt together cryolite with calcium chloride or some other non-metallic chloride or sulphide, and then to reduce the aluminium chloride or sulphide produced by manganese, also adding metallic sodium to promote the reaction. Of course, the manganese would be used as ferromanganese or spiegeleisen, and an iron alloy produced. Dr. Green, of Philadelphia, mixed powdered spiegeleisen with cryolite, placed the mixture in a graphite crucible, and heated it close to the ports of an open-hearth steel furnace until it softened, yet the iron contained afterwards only 0.3 per cent. of aluminium.

When we examine closely the heat of combination of manganese and aluminium compounds (Chapter VIII.) we see that in the combinations with chlorine and sulphur manganese is the stronger element, and we should therefore be led to expect that manganese would reduce aluminium chloride or sulphide. On the other hand, in the oxides, and particularly in the fluorides, aluminium is the stronger element. We should therefore expect aluminium to reduce manganese oxide and fluoride. This is, in fact, just what occurs. Drs. Green and Wahl, of Philadelphia, are, in fact, producing pure manganese on a commercial scale by dissolving manganese oxide in melted cryolite and adding metallic aluminium.†

* English Patent, No. 97 (1883).

† See Journal of the Franklin Institute, March, 1893, p. 218.

Reduction by Magnesium.

Magnesium develops more heat in forming compounds than aluminium does (see p. 229), which would indicate that it would reduce aluminium compounds easily. Only one or two statements on this point can be found. Margottet * states that magnesium will decompose molten cryolite, setting the aluminium at liberty. R. Gratzel † patents the reduction of a double fluoride of aluminium and potassium or sodium by metallic magnesium, or by conducting magnesium vapor into the liquid compound.

Roussin ‡ states that magnesium does not precipitate aluminium in a metallic state from its solutions. To test this point I placed a strip of magnesium in solution of aluminium sulphate, when magnesium sulphate went into solution and a precipitate of alumina was formed. It is apparent that the aluminium is first precipitated in the metallic state and promptly oxidized by the water as fast as set free, in a manner strictly analogous to the production of alumina at the negative pole when electrolyzing aqueous aluminium solutions.

In a patent awarded Count R. de Montgelas, of Philadelphia,§ it is stated that aluminium chloride is mixed with litharge, charcoal and common salt; fused and crushed. It is then remelted with magnesium filings and potassium chloride. After cooling it is again crushed, mixed with more potassium chloride and nitrate of potash, fused, poured into water, and the globules of aluminium separated out.

Clemens Winkler ‖ states that when alumina is heated with powdered magnesium, in a current of hydrogen gas, it gives a nearly black powder containing over 40 per cent. of a sub-oxide of aluminium to which he assigns the formula AlO, together

* Fremy's Ency. Chim.

† English Patent, 14325, Nov. 25, 1885.

‡ Jrnl. de Pharm. et de Chimie, iii., 413.

§ English Patent, 10606, August 18, 1886.

‖ Berliner Berichte, xxiii. p. 772.

with magnesium oxide and unaltered alumina. The last two are partly combined to magnesium aluminate. No metallic aluminium was obtained.

Reduction by Antimony.

F. Lauterborn * proposes to decompose aluminium sulphide by means of antimony and carbon. One hundred parts of dried aluminium sulphate is mixed with 50 parts of charcoal and 72 parts of metallic antimony; some sodium carbonate and fluorspar is then added, and the mixture melted. It is claimed that antimony sulphide and aluminium are found in the product, the former being in the bottom of the crucible. In a modification of this process it is claimed † that if a mixture of dried aluminium sulphate, sodium carbonate, and antimony sulphide (stibnite) is put into a shaft filled with incandescent coke, antimony will be first set free by the reaction

$$2Sb_2S_3+6Na_2CO_3+3C=6Na_2S+9CO_2+4Sb,$$

and that these products act further on the aluminium sulphate, setting free aluminium by the reaction

$$2Al_2(SO_4)_3+6Na_2S+4Sb+12C=4Na_2SbS_3+4Al+12CO_2.$$

The sodium sulph-antimonide can be smelted over with soda and antimony regained.

These extraordinary formulas have little or no basis in chemical science. Dr. Fischer ‡ says plainly that they are false.

The author tried by direct experiment to reduce aluminium sulphide by antimony, fusing down a mixture of powdered antimony with aluminium sulphide, but the button of metal obtained did not contain a trace of aluminium.

* German Patent, 32126 (1885).

† Dingler, 256, 226 and 233.

‡ Wagner's Jahresbericht, 1885.

Reduction by Tin.

J. S. Howard and F. M. Hill, assignors to the Aluminium Product Company, of New York, make the following statements in their patent specifications:* "Some aluminous material is boiled in muriatic acid, cooled, mixed with Spanish white or lime, the free acid evaporated off at a high temperature, and the heat finally increased to about 1000° F., thereby volatilizing any iron present as chloride. The product thus obtained is put into a lime-lined crucible along with lime, charcoal, fluorspar, cryolite and potassium bisulphate, the whole covered with chloride of tin, and finally by common salt. This is subjected to a smelting temperature, when on cooling it is claimed that an alloy of tin and aluminium is obtained. To separate the aluminium the alloy is melted with lead or bismuth, which alloy with the tin, letting the aluminium float on the surface along with oxides and other impurities. This is skimmed off and purified by exposure to heat on a bed of porous material."

While we cannot altogether deny the possibility of metallic tin reducing aluminium chloride, yet it is not at all probable that this salt remains after the first ignition. It is also improbable that tin would reduce cryolite in the latter operation, but there is no direct evidence to contradict the above statement.

In an experiment made by the author, aluminium sulphide was heated with tinfoil for a short time at a red heat. The resulting metal contained 0.52 per cent. of aluminium, and from the proportions of tin and sulphide used, it was evident that a large part of the aluminium sulphide present had been reduced.

Dr. J. D. Lisle, of Springfield, Ohio, has made experiments of the same nature on a more extensive scale. Aluminium sulphide was put in a crucible placed on trunnions, so as to permit agitating the contents, and metallic tin in flakes was put in with it. The crucible was closed, and when at a bright-red heat a stream of super-heated gasoline vapor led into the cru-

* U. S. Patent, 378,136, Feb. 21, 1888.

cible. Hydrogen sulphide was copiously formed, but an explosion of gasoline vapor terminated the experiment. The crucible was not broken, and when cool was opened. It contained some shot-metal, which was collected and melted into a button. This was the color of steel, very hard and tough, and upon analysis gave 19.32 per cent. of aluminium. In another experiment equal parts of aluminium sulphide and tin, in flakes, were mixed together, placed in a graphite crucible, covered with powdered charcoal, and kept at a red-heat for one-half hour. The resulting button contained 9.8 per cent. of aluminium.

While such experiments are interesting as showing the possibility of tin reducing an aluminium compound, yet pure aluminium cannot be made from the tin alloy, and metallic tin is so costly a reducing agent, being worth about 15 cents per pound, that this means of reduction can never be commercially applied, since aluminium itself is selling so cheaply.

Reduction by Phosphorus.

L. Grabau * patented the following process, in 1883, but has since virtually admitted that this method was not successful. The proposition was as follows: A rich alloy of aluminium and phosphorus is made by melting the two elements together or by fusing aluminium with phosphor salts and a reducing agent. The alloy is crushed, mixed with alumina or clay or aluminous fluorides, covered with coal dust and heated to incandescence in a crucible. It was claimed that the phosphorus combined with the oxygen or fluorine of the aluminous compound, the metal produced uniting with the aluminium already present. To produce any given alloy, the phosphide of the required metal is substituted for the aluminium-phosphorus alloy. Mr. Grabau broadens out his specifications into more probable fields by adding that "manganesic or carburetted metals may be used instead of the phosphide alloys, as reducing

* English Patent, 5798, Dec. 18, 1883.

agents." It is almost needless to say that the generally small heat of combination of phosphorus compounds would show that the reactions proposed are in a high degree improbable.

Reduction by Silicon.

M. Wanner * makes the following general claims: The production of aluminium by treating a fused bath of aluminium fluoride or aluminous fluorides, while in a molten metallic bath and protected from oxidizing agents, with a reagent whose elements dissociate below the fusing point of the aluminium fluoride or the aluminous fluorides, and having one element of such affinity that it displaces the aluminium in the fluoride compound, but having no element capable of combining with the reduced aluminium. More specifically, sulphide of silicon or an equivalent reagent is mentioned, and the reaction takes place on the hearth of a short reverberatory furnace, the metallic bath mentioned being preferably metallic iron or copper, which are able to combine with the resulting aluminium.

The reaction proposed is so far out of the usual run of speculations that no opinion can be hazarded as to its probability. Further, silicon sulphide is an almost unknown compound, and it would be very interesting to know how it is to be prepared; it would probably be a more difficult feat to get the reagent alone than to produce aluminium by many well-known methods.

* U. S. Patent, 410568, Sept. 3, 1889.

CHAPTER XIII.

WORKING IN ALUMINIUM.

Melting Aluminium.

Deville: "To melt aluminium it is necessary to use an ordinary earthen crucible and no flux. Fluxes are always useless and almost always harmful. The extraordinary chemical properties of the metal are the cause of this; it attacks very actively borax or glass with which one might cover it to prevent its oxidation. Fortunately this oxidation does not take place even at a high temperature. When its surface has been skimmed of all impurities it does not tarnish. Aluminium is very slow to melt, not only because its specific heat is considerable, but its latent heat appears very large. It is best to make a small fire and then wait patiently till it melts. One can very well work with an uncovered crucible."

"In the fusion of impure aluminium very different phenomena are observed, according to the nature of the foreign metal which contaminates it. Ferruginous material often leaves a skeleton less fusible and pretty rich in iron; a liquation has taken place, increasing the purity of the melted material. When the aluminium contains silicon this liquation is no longer possible, or at least it is very difficult, and I have sometimes seen some commercial aluminium so siliceous that the workmen were unable to remelt it. When it is desired to melt pieces together they can be united by agitating the crucible or compressing the mass with a well-cleaned cylindrical bar of iron. Clippings, filings, etc., are melted thus: Separate out first, as far as possible, foreign metals, and to avoid their combining with the aluminium heat the divided metal to as low a heat as possible, just sufficient to melt it. The oil and organic matters will burn,

leaving a cinder, which hinders the reunion of the metal if one does not press firmly with the iron bar. The metal may then be cast very easily, and there is found at the bottom of the crucible a little cinder, which still contains a quantity of aluminium in globules. These may be easily separated by rubbing in a mortar and then passing through a sieve, which retains the flattened globules."

Biederman gives the following directions: "The whole quantity of metal which is to be melted must not be put into the crucible at once, but little by little, so increasing the mass from time to time as the contents become fully melted. The necessary knack for attaining a good clean melt consists in dipping the pieces which are to be melted together in benzine before putting in the crucible. Mourey even pours a small quantity of benzine into the crucible after the full melting of the metal, and he recommends the employment of benzine in the melting of all the noble metals. To utilize the scrap pieces produced in working aluminium into various useful articles, one must as far as possible separate out first the pieces which have been soldered, in order that the newly melted aluminium may not be contaminated by the solder. The solder adhering to these pieces can be removed by treating them with nitric acid, by which the aluminium is not attacked."

Aluminium can be melted with perfect safety in common clay or sand crucibles if they are lined with carbon. This can be done by mixing lamp-black to a paste with molasses, plastering the inside of the crucible evenly and drying slowly for several days at a moderate temperature. A means of getting a more perfect lining is to ram the crucible full of this paste, drying slowly and then hollowing out a cavity of the required size leaving a uniform lining of sufficient thickness. In using these carbon-lined crucibles they should be kept well-covered, in order that the carbon may not burn away too quickly, taking particular care to place the cover on when the metal has been poured out and the crucible is cooling in the air. Small crucibles may be made of a single block of soapstone, and seem

to last a long while, the aluminium apparently having no action on this mineral at a temperature a good deal higher than its melting point.

With extra care, heating in a furnace where the heat is under exact control, aluminium may be melted in sand crucibles or in cast-iron ones. In using sand or Hessian crucibles no flux must be added, and if the metal is heated slowly to a temperature only enough above its melting point to admit of pouring quickly, it will be found that the crucible is unattacked. If, however, the crucible is heated to a bright-red heat at any part, it will be found that at that place the aluminium has attacked the crucible, and on pouring out the metal a thin, tough skin will be left adhering to the spot attacked and generally taking with it bits of the wall when it is forcibly detached. This thin sheet is hard, tough, and rich in silicon, while the rest of the metal poured out has also absorbed a little silicon. An iron crucible acts in precisely the same way; if the heat is kept close to the melting point of aluminium the latter does not "wet" the iron, but at a bright-red heat it attacks it and adheres, as in the case of the sand crucible. I will repeat, that if the temperature is kept as low as it is possible to melt and cast the metal, and if no fluxes are used, neither the iron nor sand crucibles are attacked.

In the large European works, where 500 or 1000 lbs. of aluminium are melted at once on the bed of a reverberatory furnace, the hearth was formerly protected by pure bauxite, closely rammed in and strongly fired before using, but basic magnesia bricks have now been substituted, similar to those used in basic open-hearth furnaces but of purer materials, and they are reported as being all that can be desired in their capacity for resisting corrosion.

A very good lining for any kind of crucible is made by using calcined magnesite, for which I recommend the white, Grecian mineral, fully shrunk by calcining at the highest heat of a fire-brick or porcelain kiln and then ground fine and made into a stiff paste with sugar syrup or molasses. The crucible is care-

fully lined and then heated slowly to redness. On cooling, any cracks are carefully filled with more paste, and the crucible is baked again; when properly prepared, however, one baking is sufficient, and the linings do not shrink from the walls of the crucible. This lining is a very serviceable one, not only for melting aluminium by itself, but also for using flux, for it resists cryolite, fluorspar or even a siliceous slag perfectly. Since experiment has shown that aluminium will take up about 0.25 per cent. of silicon from one re-melting at a red heat in a best-quality graphite crucible, it is very important that such deterioration be avoided if possible, and I earnestly advise all melters and casters of aluminium to take the trouble to prepare these magnesite lined crucibles if they wish to get the best results. This magnesite can be procured from the importers of chemicals in New York city, at a cost of about $0.02 per pound for the burnt and ground material.

Casting Aluminium.

Deville: "Aluminium can be cast very easily in metallic moulds, but better in sand for complicated objects. The mould ought to be very dry, made of a porous sand, and should allow free exit to the air expelled by the metal, which is viscous when melted. The number of vents ought to be very large, and a long, perfectly round git should be provided. The aluminium, heated to redness, ought to be poured rather quickly, letting a little melted metal remain in the git till it is full, to provide for the contraction of the metal as it solidifies. In general, this precaution ought to be taken even when aluminium is cast in iron ingot moulds or moulds of any other metal. The closed ingot moulds give the best metal for rolling or hammering. By following these precautions, castings of great beauty may be obtained, but it is not advisable to conceal the fact that to be able to succeed completely in all these various operations requires for aluminium, as for all other metals, a special familiarity with the material which practice alone is able to give."

The peculiarity of molten aluminium which a metal caster would first notice is its viscousness, that is, it runs thick. When about to pour, a thick edge or lip of metal forms, which must in many cases be punctured in order to start the metal flowing. On account of this property it does not run sharply in the moulds except where a head of metal puts it under pressure. To obtain sharp castings there must be a "gate" to give pressure to the metal, and when we remember that the gravity of aluminium is only 2.6 and that, besides, it does not flow thinly, it will be seen that a much higher head of metal is necessary to ensure sharp castings than is needed for iron, brass, etc. A small slab of aluminium two inches high run in a closed iron mould with very little gate was quite sharp at the lower end but had rounded corners at the top. For casting in closed moulds, the best results as to sharp castings free from cavities are obtained if a slight artificial pressure can be applied to the still liquid metal in the mould immediately after pouring. This is accomplished by Dr. C. C. Carroll, of New York, an expert in making cast-aluminium dental plates, by closing in tightly the top of the crucible containing the molten aluminium, and then by air pressure from a rubber bulb forcing the metal through a syphon-shaped tube terminating underneath the metal and connecting tightly with the pouring gate of the mould. The mould is previously heated, in order not to chill the metal too quickly, and when the metal has been forced out of the crucible by squeezing the bulb the pressure is continued for a short time in order to force the metal into every crevice of the mould and allow the casting to set under pressure.

The idea is undoubtedly correct, and the excellently sound and extremely sharp castings obtained by Dr. Carroll attest its success in practice.

The Passaic Art Casting Company, of Passaic, N. J., make very fine castings in aluminium by the Smith pressure-casting process, by which the finest details of engraved, chased or repoussèe work are brought out with a finish equal to electro-

types. Moulds, either of sand or of a liquid plaster-of-paris composition, are made in as flat a shape as possible so that they may be piled on top of each other, the gates from each mould leading to a central feeder. The entire charge of molten metal is kept in a suitable holder above the moulds. The moulds being air-tight, an air-pump is connected with the bottom of the molds while pressure is put on the molten metal above. A thin diaphragm used to keep the molten metal in the receiver is burst by the pressure, allowing the aluminium to flow quickly into the moulds, where it fills every minute cavity. Extremely light and sharp castings, having remarkable solidity and free from blow-holes, are thus obtained.

Aluminium can be cast in dry sand moulds, which are best lined with powdered plumbago. The metal should be poured fast, and not be far above its melting point, or the castings will not be sound. The shrinkage to be allowed for is very nearly one-quarter of an inch to the foot.

Quite recently a large amount of cast aluminium hollow-ware has been made for culinary use. Tea-kettles have been cast in one piece with walls only one-sixteenth of an inch thick. These castings possess the advantage that they are more malleable than any other cast metal. Thin castings of tea-kettles have been hammered in and bent almost double before breaking.

Mr. W. S. Cooper, of Philadelphia, makes some remarkably large sand-castings, adding a little copper to reduce the shrinkage. Full-sized bath-tubs, 6 feet long, 2 feet wide, 2 feet deep, and three-eighths inch thick, with a roll rim, and weighing complete 140 lbs., are worthy of special mention, for such a casting would not be easy to make in the best-flowing metal.

Purification of Aluminium.

Freeing from slag.—Deville gives the following information on this important subject:

"It is of great importance not to sell any aluminium except that which is entirely free from the slag with which it was produced and with which its whole mass may become impregnated.

We have tried all sorts of ways of attaining this end, so as to obtain a metal which would not give any fluorides or chlorides upon boiling with water, or give a solution which would be precipitated by silver nitrate. At Glacière we granulated the metal by pouring it while in good fusion into water acidulated with sulphuric acid; this method partially succeeded. But the process which M. Paul Morin uses at present (1859), and which seems to give the best results, is yet simpler. Three or four kilos of aluminium are melted in a plumbago crucible without a lid, and kept a long time red-hot in contact with the air. Almost always acid fumes exhale from the surface, indicating the decomposition by air or moisture of the saline matter impregnating the metal. The crucible being withdrawn from the fire, a skimmer is put into the metal. This skimmer is of cast iron; its surface ought not to be rough and it will not be wetted by the aluminium in the least during the skimming; it may be of advantage to oxidize its surface with nitre before using. The white and slaggy matters are then removed, carrying away also a little metal, and are put aside to be remelted. So, in this purification, there is really no loss of metal. After having thus been skimmed, the aluminium is cast into ingots. This operation is repeated three or four times until the metal is perfectly clean, which is, however, not easily told by its appearance; for, after the first fusion, the crude aluminium when cast into ingots has a brilliancy and color such as one would judge quite irreproachable, but the metal would not be clean when it was worked, and especially when polished would present a multitude of little points called technically 'piqûres,' which give to its surface, especially with time, a disagreeable look. Aluminium, pure and free from slag, improves in color on using. It is the contrary with the impure metal or with aluminium not free from slag. When aluminium is submitted to a slow, corroding action, its surface will cover itself uniformly with a white, thin coating of alumina. However, any time that this layer is black or the aluminium tarnishes, we may be sure that it contains a foreign metal, and that the alteration is due to this impurity."

Freeing from impurities.—Again Deville is the authority, and we quote his advice on the subject:—

"A particular characteristic of the metallurgy of aluminium is that it is necessary, in order to get pure metal, to obtain it so at the first attempt. When it contains silicon, I know of no way to eliminate it: all the experiments which I have made on the subject have had a negative result; simple fusion of the metal in a crucible, permitting the separation by liquation of metals more dense, seems rather to increase the amount of silicon than to decrease it. When the aluminium contains iron or copper, each fusion purifies it up to a certain limit, and if the operation is done at a low heat there is found at the bottom of the crucible a metallic skeleton containing much more iron and copper than the primitive alloy. At first I made this liquation in the muffle of a cupel furnace, in which process the access of air permitted the partial oxidation of these two metals. The little lead which aluminium may sometimes take up may thus be easily separated. Unfortunately, the process does not give completely satisfactory results. It is the same in fusing impure aluminium under a layer of potassium sulphide, K_2S_3; there is a partial separation of the lead, copper, and iron. That which has succeeded best with us is the process which we have employed for a long time at Glacière, and which consists in melting the aluminium under nitre in an iron crucible. We have in this way improved the quality of large quantities of aluminium. The operation is conducted as follows: Aluminium has generally been melted with nitre in order to purify it by means of the strong disengagement of oxygen at a red heat, no doubts being entertained as to the certainty of the result. But it is necessary to take great care when doing this in an earthen crucible. The silica of the crucible is dissolved by the nitre, the glass thus formed is decomposed by the aluminium, and the siliceous aluminium thus formed is, as we know, very oxidizable, and especially in the presence of alkalies. So, the purification of aluminium by nitre ought to be done in a cast-iron crucible well oxidized itself by nitre on the inside."

"On melting aluminium containing zinc in contact with the air and at a temperature which will volatilize the zinc, the largest part of the latter burns and disappears as flaky oxide. To obtain a complete separation of the two metals it is necessary to heat the alloy to a high temperature in a brasqued crucible. This experiment succeeds very well, but it is here shown that the aluminium must oxidize slightly on its surface, for some carbon is reduced by the aluminium from the carbonic oxide with which the crucible is filled. This carbon thus separated is quite amorphous."

Dr. Lisle, of Springfield, O., tested the removal of zinc from aluminium by distillation and succeeded in obtaining a product with 98 per cent. of aluminium from which the zinc had been completely removed. If aluminium containing tin is melted with lead, the latter sinks with the tin, removing it almost completely from the aluminium, but the metal remaining retains a little lead. In an experiment made by the author, aluminium with 10 per cent. of tin was treated in this way, but the aluminium retained nearly 7 per cent. of lead, giving it a blue color and large crystalline structure. M. Peligot is reported by Deville to have succeeded in cupelling aluminium with lead, whereby impure, tough metal became quite malleable. It may be that the small percentage retained by aluminium when melted with lead is removed by fusion on a cupel, but I have been unable to perform any operation with aluminium at all analogous to the cupellation of silver with lead.

G. Buchner states that commercial aluminium contains considerable quantities of silicon, which by treatment, when melted, with hydrogen, evolves hydrogen silicide. This does not result if arsenic is present.

To test this point, I took a sample of aluminium containing 4 per cent. of silicon, and 94 per cent. of aluminium. This was melted at a low red heat in a sand crucible and hydrogen gas run in for 12 minutes. On pouring out, the crucible was unattacked, but the metal was identical in color and structure with that not treated. This was repeated several times, hydrogen

gas being passed in as long as 20 minutes with the metal at red heat, but no apparent change in the purity of the metal resulted.

Similar experiments were made with a current of sulphuretted hydrogen gas, with a view of removing the iron. No improvement in the looks of the aluminium was apparent. If, however, air was blown into the melted metal, an improvement was made. The aluminium was at a bright red heat, and air blown in for 5 minutes, at the end of which time about 5 to 10 per cent. of dross composed of mixed metal and oxide was formed, and the remaining metal was whiter, of a finer grain, and evidently much improved.

Prof. Mallet * made some very accurate estimations of the atomic weight of aluminium (which he found to be 27.02), and obtained the chemically pure metal required for his work by the following process, which is quite applicable when studying the properties of the pure metal, yet is of course altogether out of the question as an industrial operation. The purest commercial metal was bought, and on analysis was found to contain—

Aluminium	96.89 per cent.
Iron	1.84 "
Silicon	1.27 "

This was treated with liquid bromine and converted into bromide. This salt was then purified by fractional distillation, the temperature being very carefully regulated, and the operation repeated until the product was perfectly colorless, and dissolved in water without leaving any perceptible impurity. The reduction was accomplished with difficulty and much loss by treating with sodium in a crucible made of a mixture of pure alumina and sodium aluminate. The metal obtained gave on analysis no weighable quantity of impurities, and the properties mentioned in Chapters III. and IV. as Mallet's observations are those quoted from his report on this pure metal.

* Philosophical Magazine, 1880.

Professor Le Verrier states * that by a simple fusion of aluminium under a layer of an alkaline fluoride the amount of silicon is easily diminished. He states that a specimen containing 0.81 per cent. of silicon, contained after one such fusion only 0.57 per cent.

If aluminium is overheated in the crucible, it has a great tendency to absorb gas (like silver), and gives it out in setting, producing blow-holes in the castings. It is therefore important to carefully regulate the temperature of melting. Coehn recommends the use of a very small amount of sodium, to take gas out of the metal, only enough being used to form a thin film over the melted metal.

Annealing.

By heating to very low redness and cooling quickly, as by dropping into water, aluminium becomes soft. To get the best results, the metal should be heated until it just begins to glow in the dark, or the object is rubbed with a lump of fat, and the moment that the black trace left by the carbonization of the fat disappears, the metal is removed from the annealing oven. Great care is necessary in annealing thin sheets which are being beaten into leaf, to avoid melting them. Fine wire can be annealed over the chimney of an Argand burner. If it is necessary that the heat must be kept below the point where the metal would bend and lose its shape, the articles can be heated in boiling linseed oil and allowed to cool very gradually with the oil. Very thin sheets or wire can be softened by putting into boiling water and letting them cool with the water. (See also pp. 70, 74.)

Hardening.

By hammering, rolling, or drawing, aluminium becomes sensibly harder and stiffer, so that it becomes elastic enough to be used even for hair-springs for watches. If castings of aluminium are made a little larger than the finished article desired,

* Comptes Rendus, July, 1894, p. 13.

and drop-forged cold in dies of the right size, the hardness is much increased, and it becomes much better able to stand wear in bearings where great weight does not have to be endured, *e. g.*, in surveying instruments. Queen & Co., of Philadelphia, state that they find it best, however, to bush all sockets in aluminium castings with brass, when making a bearing or tapping in a screw.

The most careful tests fail to show the slightest increase in hardness in metal which has been chilled, as practised with cast-iron. Surfaces cast in cold, metallic moulds seem as soft as those cast in sand.

The Eureka Tempered Copper Company of Northeast, Pennsylvania, claim that they have hardened aluminium castings in the same way as they harden copper, but I have seen none of their work.

Rolling.

Before rolling a bar of aluminium it is well to soften it, and to taper down a "lead" by hammering. The metal forges well under the hammer at a low red heat. The metal for rolling had better be cast into plates in covered iron ingot-moulds, and the surfaces planed to remove small irregularities. The rolling is not difficult, except that a large amount of power is required (about as much for cold aluminium as for hot steel), and as the metal quickly gets hard it must be annealed often. It is recommended that the metal be brought warm under the rolls, and, if possible, elongated 10 to 20 per cent. with the first pass, in order to entirely destroy the crystalline structure of the metal. The annealing is repeated between each pass until the sheet is about 3 millimetres thick, after which it can generally be rolled with fewer annealings, sometimes without any at all. Rolls warmed to 100–150° C. work better than cold ones. Aluminium has been rolled down to the thinness of tissue-paper.

Thin-rolled sheets may be still further extended out by beating into leaf. The gold-beaters are said to have no special difficulty in doing this, except that more frequent annealings

are necessary than with gold or silver. M. Degousse was the first to make this leaf, in 1859; he states that the tempering must be done by warming only to 100° or 150° C., an actual glowing heat proving very unsuitable. Aluminium leaf is made as thin as ordinary gold or silver leaf, and this property would, therefore, establish aluminium as next to these noble metals in the order of malleability.

The Mannesmann process of cold rolling is applicable to aluminium, by which tubes of all shapes and sizes can be made.

Mr. Elwood Ivins, of Philadelphia, has a special process for making metallic tubes, which is a sort of rolling process on a mandril, by which he makes aluminium tubes of any size, shape or thickness of walls. I have seen a tube made by this process 10 metres long by 1 millimetre in diameter.

Drawing.

Prof. Thurston places aluminium as sixth in the order of ductility, being preceded by gold, silver, platinum, iron and copper, but it is doublful if it does not rank equally as high as iron. Deville states that in 1855 M. Vangeois obtained very fine wire with metal far from being pure. Bell Bros., at Newcastle-on-Tyne, recommended that the metal for drawing be run into an open mould so as to form a flat bar of about one-half inch section, the edges of which are beaten very regularly with a hammer. The diameter should be very gradually reduced at first, with frequent heating. When the threads are required very fine the heating becomes a very delicate operation, on account of the fineness of the threads and the fusibility of the metal. The gauge should be reduced by the smallest possible gradations, when wires may be obtained as fine as a hair.

Aluminium tubes are drawn, either round or square, from sheet which has been soldered together or from cast rings of the required section; the first method is said to be preferred. As the aluminium quickly loses its temper it must be annealed after each extension.

Stamping and Spinning.

Aluminium can be spun on the lathe into all sorts of round and hollow forms; it may also be pressed or stamped into shape in the cold; it is of advantage in doing this to use a kind of varnish composed of 4 parts of oil of turpentine and 1 part of stearic acid. Soap-water is always to be avoided.

Grinding, Polishing and Burnishing.

When cast carefully it can be filed without fouling the file. Spun and stamped articles of aluminium can easily be ground by using olive oil and pumice. A fine steel scratch-brush run at a high speed will give a good polish to sand castings, and remove the yellowish streaks that may have been produced by too hot metal. If sheet metal is thus treated it gives a frosted appearance, which forms a beautiful finish. Biederman makes the following remarks on polishing: "The use of the old means of polishing and burnishing metals, such as soap, wine, vinegar, linseed-oil, decoction of marshmallow, etc., is not effective with aluminium, but, on the contrary, is even harmful, because, using them, the blood stone and the burnishing iron tear the metal as fine stone does glass. Oil of turpentine has also been used, but with no good effect. Mourey found, after many attempts, that a mixture of equal weights of olive oil and rum, which were shaken in a bottle till an emulsified mass resulted, gave a very brilliant polish. The polishing stone is dipped in this liquid, and the metal polished like silver, except that one must not press so hard in shining up. The peculiar black streaks which form under the polishing stone need cause no trouble; they do not injure the polish in the least, and can be removed from time to time by wiping with a lump of cotton. The best way to clean a soiled surface and remove grease is to dip the object in benzine, and dry it in fine sawdust."

Mr. J. Richards found that when buffing in the ordinary way the dark-colored burnishing powder cut into the metal and filled its pores with black specks. He found the best means of

burnishing is to use a piece of soft wood soaked in olive oil; this closes the grain, and gives a most brilliant finish.

The Pittsburgh Reduction Company polish sheet aluminium with a sheep-skin, chamois-skin or rag buff, using rouge, the same as for brass. The particular requisite of a polishing powder for aluminium is that it be very finely ground. This company sells a polishing powder called "Almeta Polish," which consists of

Stearic acid	1 part.
Fuller's earth	1 "
Rotten stone	6 "

The whole ground very fine and well mixed.

Engraving.

Kerl & Stohman: Aluminium resists the action of the engraving tool, which slides upon the surface of the metal as upon hard glass. But as soon as a varnish of 4 parts of oil of turpentine and 1 of stearic acid, or some olive oil mixed with rum is used, the tool cuts into it as into pure copper.

Cleaning and Pickling: Mat.

Dirt and grease are removed easily by dipping in benzine or turpentine.

To obtain the beautiful "mat" or frosted effect, which aluminium takes as easily as silver, Deville recommended dipping for an instant in a very dilute solution of caustic soda, washing in a large quantity of water, and last dipping in strong nitric acid. An English writer recommends dipping 1¼ minutes in a solution of 3 ounces of caustic potash to a quart of water, wash thoroughly, and then dip in a mixture of 3 measures strong nitric acid to 2 measures sulphuric acid. By the above treatments, any elements which might contaminate the aluminium, except a very large proportion of silicon, are dissolved from the surface. If, as Mourey recommends, some hydrofluoric acid is added to the nitric, the silicon is more actively attacked.

Welding.

Aluminium cannot be welded except by the electrical process, and then only with difficulty. The high electric conductivity, the high specific heat and latent heat of fusion, and particularly the mushy state into which the metal passes some considerable time before its real melting point, make the operation hard to perform satisfactorily. In the early days of electric welding it could not be done at all, but the Thomson Electric Welding Company state that they have constructed a special machine for this kind of material, and can now make the welds rapidly and satisfactorily.

Soldering Aluminium.

A satisfactory solder for use on any metal should fill the following requirements :*

1. It should fuse readily.
2. It must alloy easily with the metal; in common parlance, it must *bite*.
3. It must be tough.
4. It must not disintegrate.
5. It should be of the same color as the metal.
6. It should not discolor with age.
7. It should not be too expensive.

Aluminium is a difficult metal to solder properly for three particular reasons:

1. It is difficult to expose a bare surface of aluminium to the action of the solder. Grease and dirt can be easily enough removed, but there is always present a thin, continuous coating of alumina which effectually prevents the solder from getting to the metal beneath. It might be thought that a thorough sand-papering or filing of the surfaces immediately before soldering would overcome this, but we find it of absolutely no use; the reason is that the thin, invisible skin of alumina forms

* For a more extended essay on the properties of a good solder, see a paper by the writer in the "Aluminium World," New York, October, 1894.

instantly, as quickly as the metal is laid bare. The ordinary fluxes used in soldering have no effect at all on this coating. To overcome this difficulty, it is necessary either to use some particular flux which can remove this oxide and preserve the surface clean until the solder can take hold, or else to incorporate into the composition of the solder some ingredient which can do the same thing. The latter device has been the most successful, as theoretically it should be; for if the solder as it were carries its own flux, the action of the flux and the taking hold of the solder must be simultaneous, and therefore most effective.

2. Aluminium has a high conductivity for heat. This interferes greatly with the attempt to produce a local temperature at the joint high enough for the solder to alloy; which causes the solder to chill quickly in the joint, particularly when working on bulky articles. The only way to overcome this difficulty is to use very hot soldering-bolts and to work slowly, so as to get the metal at the joints hot.

3. Aluminium is highly electro-negative. This property causes the first difficulty, the instantaneous formation of a thin skin of oxide, but it also operates in another way after the joint is made. It causes galvanic action to arise at the joint between the aluminium and the solder, and causes the joint to weaken rapidly. To render this action as small as possible, the solder should be made as far as practicable of metals near to aluminium in the galvanic series, such particularly as zinc.

With the preceding introduction to the subject, we will consider the various solders which have been proposed and used, giving first Deville's views on the question, for even at the time of writing his book (1859), the difficulty of soldering aluminium properly was regarded as one of the greatest obstacles to its industrial employment.

Deville: "Aluminium may be soldered, but in a very imperfect manner, either by means of zinc, or cadmium, or alloys of aluminium with these metals. But a very peculiar difficulty arises here—we know no flux to clean the aluminium which

does not attack the solder, or which, protecting the solder, does not attack the aluminium. There is also an obstacle in the particular resistance of aluminium to being wetted by the more fusible metals, and on this account the solder does not run between and attach itself to the surfaces to be united. M. Christofle and M. Charrière made, in 1855, during the Exposition, solderings with zinc or tin. But this is a weak solder and does not make a firm seam. MM. Tissier, after some experiments made in my laboratory, proposed alloys of aluminium and zinc, which did not succeed any better. However, M. Denis, of Nancy, has remarked that whenever the aluminium and the solder melted on its surface are touched by a piece of zinc, the adhesion becomes manifest very rapidly, as if a particular electrical state was determined at the moment of contact. But even this produces only weak solderings, insufficient in most cases."

"A long time ago, M. Hulot proposed to avoid the difficulty by previously covering the piece with copper, then soldering the copper surfaces. To effect this, plunge the article, or at least the part to be soldered, into a bath of acid sulphate of copper. Put the positive pole of a battery in communication with the bath, and with the negative pole touch the places to be covered, and the copper is deposited very regularly. M. Mourey has succeeded in soldering aluminium by processes yet unknown to me; samples which I have seen looked excellent. I hope, then, that this problem has found, thanks to his ingenuity, a solution; a very important step in enlarging the employment of aluminium."

Mourey's first practicable solders for aluminium were of zinc and aluminium, and of two kinds—hard and soft. He used a soft solder to first unite the pieces, and afterwards finished the soldering with a less fusible one. These solders contained—

	I.	II.	III.	IV.	V.
Aluminium	20	15	12	8	6
Zinc	80	85	88	92	94

The alloys with the larger proportion of zinc are the easiest

melting or softest ones, one such as IV. being used for ordinary work, while II. was used for brazing. These solders have the disadvantage that on melting they oxidize very easily, and in consequence of the film of oxide thus formed the work is so much more difficult. This difficulty can be overcome by dipping the small grains of solder in copaiva balsam and turpentine, which keep out the air, and act as reducing agents during the operation. The new solders subsequently used were simpler in application, for the work was finished with one solder and the moistening with balsam was rendered unnecessary.

Mourey improved upon the zinc-aluminium solders by adding copper, using five different alloys of these three metals according to the objects to be soldered. They contained—

	I.	II.	III.	IV.	V.
Aluminium	12	9	7	6	4
Copper	8	6	5	4	2
Zinc	80	85	88	90	94

The following directions are given for preparing these alloys:*

"To make the solder, first put the copper in the crucible. When it is melted, then add the aluminium in three or four portions, thereby somewhat cooling the melted mass. When both metals are melted, the mass is stirred with a small iron rod, and then the required quantity of zinc added, free from iron, and as clean as possible. It melts very rapidly. The alloy is then stirred briskly with an iron rod for a time, some fat or benzine being meanwhile put in the crucible to prevent contact of the metal with air and oxidation of the zinc. Finally the whole is poured out into an ingot mould previously rubbed with benzine. After the addition of zinc, the operation must be finished very rapidly, because the latter will volatilize and burn out. As soon as the zinc is melted the crucible is taken out of the fire. Only zinc free from iron can be used, since even an apparently insignificant amount of this impurity injures the qualities of the solders very materially in regard to durability and fusibility.

* Das Löthen, by Edmund Schlosser, Vienna, 1880, p. 101.

"The separate pieces of metal to be soldered together are first well cleaned, then made somewhat rough with a file at the place of juncture, and the appropriate solder put on it in pieces about the size of millet grains. The objects are laid on some hot charcoal, and the melting of the solder effected by a blast lamp or a Rochemont turpentine-oil lamp. During the melting of the solder, it is rubbed with a little soldering iron of pure aluminium. The soldering iron of pure aluminium is essentially a necessity for the success of the operation, since an iron of any other metal will alloy with the metals composing the solder, while the melted solder does not stick to the iron made of aluminium.

"For quite small objects, as for jewelry, solder I. is used; for larger objects and ordinary work IV. is more suitable, and is the solder most used. These alloys work so perfectly that plates soldered together never break at the joint when bent back and forth, but always give way in other places; which is a result not always possible in the best soldering of plates of silver."

Bell Bros. used the above solders in their works at Newcastle, and in a description of the soldering operation state the following facts in addition to those already given:* "In the operation of soldering, small tools of aluminium are used, which facilitate at the same time the fusion of the solder and its adhesion to the previously prepared surfaces. Tools of copper or brass must be strictly avoided, as they would form colored alloys with the aluminium and the solder. The use of the little tools of aluminium is an art which the workman must acquire by practice. At the moment of fusion the work needs the application of friction, as the solder suddenly melts very completely. In soldering it is well to have both hands free, and to use only the foot for the blowing apparatus."

We also find the following alloys credited to Mourey as used by him for soldering aluminium, probably with the blow-pipe:†

* Chemical News, iv., 81.

† Dingler, 166, 205.

Aluminium	30	20
Copper	20	15
Zinc	50	65

While it is true that Mourey received from the Société d'Encouragement a prize for the solders he had found, and while they were the best then in use, yet every one knows that they were not satisfactory. Their melting points were too high, and it required great skill to make neat joints. Even as late as 1890 we find a writer saying, "The want of a suitable solder for aluminium has greatly retarded its use in the arts," although many attempts had meanwhile been made to provide solders superior to Mourey's.

Col. Wm. Frishmuth * recommends a solder containing:—

Aluminium	20
Copper	10
Zinc	30
Tin	60
Silver	10

Later, Col. Frishmuth † states that the solder just given is used for fine ornamental work, while for lower-grade work he uses the following:—

	I.	II.	III.
Tin	95	97	98–99
Bismuth	5	3	2–1

He recommends for a flux, in all cases, either paraffin, stearin, vaselin, copaiva balsam, or benzine. In the solder for fine work, if aluminium is used in larger quantity than recommended, the solder becomes brittle.

Schlosser ‡ recommends two solders containing aluminium as especially suitable for soldering dental work, on account of their resistance to chemical action. Copper cannot be allowed in alloys intended for this use, or only in very insignificant

* Techniker, vi. 249.

† Wagner's Jahresb., 1884.

‡ Das Löthen, p. 103.

quantity, since it is so easily attacked by acid food, etc. Since these two alloys can probably be used also for aluminium dental work, we subjoin their composition—

Platinum-aluminium solder.		Gold-aluminium solder.	
Gold	30	Gold	50
Platinum	1	Silver	10
Silver	20	Copper	10
Aluminium	100	Aluminium	20

M. Bourbouze states that the difficulties met with in soldering aluminium are satisfactorily overcome by the following process:—

* "The parts to be united are subjected to the ordinary operation of tinning, except that in place of pure tin an alloy of tin and zinc, or, better, of tin, bismuth and aluminium is used. However, preference is given to an alloy of tin and aluminium, mixed in different proportions to suit the work put on the joint. For those which are to be subsequently worked, an alloy of 45 parts tin and 10 parts aluminium should be used. This solder is malleable enough to resist hammering, drawing, or turning. Pieces not to be worked after soldering may, whatever the metal to be united to the aluminium, be solidly soldered with a tin solder containing less aluminium. Neither of these solders requires any preparation of the pieces, and the last one may be applied with a common soldering-iron. To unite other metals to aluminium it is best to coat the part with pure tin, the aluminium is coated with one of the above alloys, the joint closed and finished by heating in the usual manner."

O. M. Thowless has patented the following solder for aluminium, and method of applying it: † The alloy is composed of—

Tin	55	parts.
Zinc,	23	"
Silver	5	"
Aluminium.,	2	"

* Comptes Rendus, 98, 1490.

† English Patent, 10,237, Aug. 29, 1885.

The silver and aluminium are first melted together, the tin added, and lastly the zinc. The metallic surfaces to be united are immersed in dilute caustic alkali or a cyanide solution, washed and dried. They are then heated over a spirit lamp, coated with the solder and clamped together, small pieces of the alloy being placed around the joints. The whole is then heated to the melting point of the solder, and any excess of it removed. No flux is used.

J. S. Sellon patents the following method:* The aluminium surfaces are cleaned by scraping and covered with a layer of paraffin wax as a flux. They are then coated by fusion with a layer of an alloy of zinc, tin and lead, preferably in the proportions—

Zinc	5
Tin	2
Lead	1

The metallic surfaces thus prepared are soldered together in the usual way with any good solder.

C. Sauer, of Berlin, patents the following:† An alloy is made of

Aluminium	9 parts.
Silver	1, 2, 3 or 4 "
Copper	2, 3, 4 or 5 "

He also claims the above alloy, to which is added 1 or 2 parts of zinc, cadmium or bismuth, or even of a fusible metal such as Wood's alloy. A small proportion of gold may be added. In making, the copper and silver are first melted, molten aluminium, added and the solid zinc last dropped in. In using, the alloy is broken small, spread between the surface to be soldered, previously heated, and the joint then made with a soldering-iron. No flux is required.

J. Novel‡ states that the following alloys can be used on aluminium, aluminium bronze or for any other metals:

* English Patent, 11,499, Sept. 26, 1885.

† English Patent, 8,551, May 5, 1892.

‡ Comptes Rendus, **116**, 256.

		Melting point.
No. 1.	Pure Tin	235° C.
" 2.	Tin 1000, Lead 50	280–300°
" 3.	Tin 1000, Zinc 50	280–330°
" 4.	Tin 1000, Copper 10 to 15	350–450°
" 5.	Tin 1000, Nickel 10 to 15	350–450°
" 6.	Tin 900, Copper 100, Bismuth 2 to 3	350–450°

Nos. 1, 2, and 3 are for pure aluminium, having a white color; Nos. 4 and 5 are harder and stronger, but are light-yellow; No. 6 is yellow, and best adapted for soldering aluminium bronze.

By reference to Deville's statement, (p. 459), it will be seen that aluminium was soldered with tin in 1855, but the joints were found too weak; and it has been the writer's experience that such joints quickly disintegrate and fall apart.

Mr. C. H. Land, of Detroit, Mich., states, however, that joints of pure tin can be made strong and permanent by operating in the following manner:* The pieces of aluminium to be soldered are immersed in molten tin, and while submerged, the parts to be soldered rubbed briskly with a brush having steel bristles. This removes the skin of oxide and permits the tin to unite firmly with the aluminium. Edges thus treated can be sweated together or soldered together with ordinary solder. Aluminium can thus be soldered also to copper, brass, galvanized-iron or cast-iron. It is stated by Mr. Laird that joints made four years ago are still strong, and show no signs of coming apart. Since the writer's experience with pure tin used in the ordinary way is just the reverse of this, it may be that the wetting of the edges by rubbing in the molten tin is of great benefit in producing a permanent joint. Exactly the same method of procedure was patented in England by L. Oliven, more than two years later.†

The Aluminium Company at Neuhausen, Switzerland, put on the market in 1890 specially-prepared sheet aluminium,

* U. S. Patent, 440,952, Nov. 18, 1890.

† English Patent, 23,477, Dec. 20, 1892.

which was easier to solder than ordinary aluminium. The special preparation was not divulged, but I have heard that aluminium containing 1 or 2 per cent. of zinc solders more easily than the pure metal. The edges to be joined were not scraped, but a flux of resin, tallow and zinc chloride was to be used. The same firm also recommended depositing a thin film of copper on the edges to be joined, and then soldering on the copper. The trouble with this device is that the copper is apt to shell off by the sudden heating. The same firm also subsequently recommended the use of cadmium chloride as a flux, when doing blow-pipe work, but this salt quickly absorbs moisture from the air and becomes worthless for the purpose.

Otto Nicolai, of Wiesbaden, and Carn Langenbach, have patented * the use of the chloride, sub-chloride, bromide or iodide of silver as a flux. Their action would be, of course, to deposit metallic silver on the aluminium. The salt is strewn as powder along the joint, and the soldering done with any good solder. The use of silver chloride in this way was patented in the United States previous to the above date. The flux is certainly of advantage to use, but is too expensive for ordinary work.

Wegner and Guhrs † recommend using as a flux a mixture of 80 parts stearic acid, 10 parts zinc chloride, and 10 parts stannous chloride, $SnCl_2$. They claim excellent results when this is used with a solder of 80 parts tin to 20 zinc.

E. Werner, of Hamburg, ‡ proposes to use as a flux when soldering aluminium the cyanide of the metal used as solder, *e. g.*, cyanide of tin. The solder and flux are strewn along the joint and melted with the blow-pipe.

B. I. Roman § patents a solder composed of zinc 50 parts,

* English Patent, 16,292, Sept. 12, 1892.

† English Patent, 512, Jan. 10, 1893.

‡ German Patent, 75,659.

§ English Patent, Sept. 19, 1893, No 17,623.

tin 34, aluminium 9, nickel 5, silver 2. No flux is used with it, and an aluminium bolt is recommended.

The Alsite Aluminium Solder, made in New York, was extensively advertised during 1893 and 1894, and at a demonstration before the Franklin Institute, Philadelphia, the inventor did some very neat and solid work with it, using the blow-pipe. The melting point, however, was high, and considerable skill was required to use it. The composition was not divulged. After the lapse of a year, however, the work done has tumbled apart by the disintegration of the solder, and even the bar of solder itself has become black and so brittle that it will not support its own weight.

The writer's father, Mr. Joseph Richards, of the Delaware Metal Refinery, Philadelphia, one of the most extensive makers of lead-tin solder in the United States, has experimented a great deal with aluminium solder, and finally concluded that a small amount of *phosphorus* was a great improvement to any other solder hitherto used. The composition has been patented in the United States and England * and describes as preferable a solder composed of—

Tin	32 parts	=	78.34 per cent.	tin
Zinc	8 parts	=	19.04 "	zinc.
Aluminium	1 part	=	2.38 "	aluminium.
Phosphor tin	1 part	=	0.24 "	phosphorus.

On re-melting some of this solder, a liquation was noticed, and it was inferred that the more fusible part was probably a better alloy for soldering, being less likely itself to liquate. It was therefore analyzed, and found to contain 71.65 per cent. of tin, corresponding closely to the formula Sn_4Zn_3, which would call for 70.7 per cent. The solder as now made contains 1 part aluminium, 1 part phosphor tin, 11 parts zinc and 29 parts tin, giving it 71.2 per cent. of tin.

As regards the use of this solder, it may be said that it fills most of the conditions of a satisfactory solder. It fuses easily,

* United States Patent, 478,238, July 5, 1892; English Patent, 20,208, of 1892.

at a heat attainable with a copper or nickel bolt; it has a wonderful ability to take hold on the metal, for I have heated a piece of sheet aluminium and then firmly traced my name on it with a stick of solder used as a pencil; it is so tough that if a joint is well made the metal will break before the solder; it does not disintegrate, for joints made three years ago are still firm; it is very nearly the color of aluminium, but darkens slightly on standing some time; when the article is in constant wear, however, the solder retains its bright color, or when discolored it becomes bright again by polishing; the solder is not expensive. Joints may be made with the bolt, the blow-pipe, or by sweating together. The edges to be joined are filed or scraped clean immediately before soldering, then, if the piece will allow, heated to a temperature at which the solder melts and the edges are *tinned* by rubbing with a stick of solder. If the whole piece cannot be heated, the edges can be tinned by heating with a tinned bolt, and rubbing in the melted solder briskly. Any surplus solder is removed from the edges by a small scraper, while still hot. The prepared edges are then soldered together in any way desired. For a lap-joint, the edges are over-lapped, the soldering bolt passed along, and a little extra solder melted in the joint. For a joint at an angle, it is necessary that the bolt be shaped to fit, as the solder must be rubbed in well at the edges. No flux of any kind is to be used either on the bolt or the joint. In making a lock-seam, the edges of the aluminium should be coated with the solder as above described before being turned over, else the solder cannot soak into the joint. Common sheet-tin does not need such preparation, because the whole sheet is already tinned to start with. In brief, to put it in a way which any tinsmith can understand, aluminium is similar to copper and black-iron, not like tinned iron, and the edges to be joined *must* be prepared for soldering. The solder answers equally well for uniting aluminium to copper, brass, German-silver, steel or cast-iron, which work has been repeatedly performed, and found to make a permanently good joint.

This solder is sold in Great Britain by Mr. Archibald Briggs, of Dundee, Scotland, and on the Continent by the Aluminium Industrie Actien-Gesellschaft at Neuhausen, Switzerland. Dr. Kiliani, director of the latter's works, pronounced it the only satisfactory solder for use with the bolt. It is the only solder used by the large makers of aluminium goods, and its use is increasing rapidly with the growth of the aluminium industry.

Coating Metals with Aluminium.

Many attempts have been made to give baser metals a thin coating of aluminium and thus impart to them superficially the resisting properties of that metal. We may distinguish broadly two different methods of procedure used to accomplish this—the chemical (and electric) and the mechanical. Aluminium is not thrown down in a metallic state from its solutions by any other metal, and therefore it cannot be obtained as a plating by dipping the article in any solution of its salts. It can, however, be deposited electrically from aqueous solutions, using soluble aluminium anodes, as has been already described in Chapter XI.

Aluminium can also be deposited electrolytically in the solid state from a fused bath of its chlorides, etc., but, although Deville says that this principle can be utilized for coating other metals with aluminium, yet the metal is never deposited in a dense, compact film, but more or less as a powder mixed with carbon and other impurities, and satisfactory results cannot be obtained. The mechanical methods alluded to are conducted in two ways, either by uniting thin sheets of aluminium to the surface of another metal (veneering), or by using aluminium powder and burning in (aluminizing).

Of the practice of veneering with aluminium, Deville says in 1859: "M. Sevrard succeeded in 1854 in plating aluminium on copper and brass with considerable perfection. The two metallic surfaces being prepared in the ordinary manner and well scoured with sand, they are placed one on the other and held tightly between two iron plates. The packet is then

heated to dark redness, at which temperature it is strongly compressed. The veneer becomes very firmly attached, and sheets of it may be beaten out. I have a specimen of such work perfectly preserved. The delicate point of the operation is to heat the packet just to that point that the adherence may be produced without fusing the aluminium, for when it is not heated quite near to this fusing point the adherence is incomplete. Experiments of this kind with copper and aluminium foil did not succeed, for as soon as any adherence manifested itself the two metals combined and the foil disappeared into the copper. In an operation made at too low a temperature, the two metals, as they do not behave similarly on rolling, become detached after a few passes through the rolls. Since then, the experiments in veneering aluminium on copper, with or without the intervention of silver, have succeeded very well." Deville stated later, in 1862, that Chatel had brought this art to perfection, the veneered plates being used largely for reflectors, etc., in place of silver-plated material.

Dr. Clemens Winckler * gives his experience in this line as follows: "The coating of other metals with aluminium by the so-called plating method is, according to my own experience, possible to a certain degree, but the product is entirely useless, every plating requiring an incipient fusing of both metals and their final intimate union by rolling. The ductility of aluminium is, however, greatly injured by even a slight admixture with other metals; iron makes it brittle, and copper, in small per cent., makes it fragile as glass (?). If now it were possible in any way to fuse a coating of aluminium upon another metal, there would be formed an intermediate alloy between the two metals from which all ductility would be gone and which would crumble to powder under the pressure of the rolls, thus separating the aluminium surface from the metal beneath. But even if it were possible in this way to coat a metal with a thin plate, it is still doubtful if anything would be attained thereby. For,

* Industrie Blätter, 1873.

while compact aluminium resists oxidizing and sulphurizing agencies, the divided metal does not. In powder or leaves aluminium is readily oxidized, as is shown by its amalgam becoming heated in the air and quickly forming alumina. In the form of a coating upon other metals it must necessarily be in a somewhat finely divided state, and hence would probably lose its durability."

Dr. G. Gehring* has patented a method of aluminizing by which difficultly-fusible metals, stone-ware or the like, can be coated with aluminium. A mixture is made of a fatty acid (sebacic) and acetic acid with clay, etherized oil and aluminium (or aluminium bronze) in powder. This is spread evenly on the metal or object to be treated and then heated with a Bunsen burner using blast or in a muffle. The coating produced is silver white, does not oxidize under ordinary conditions, stands heating in an ordinary fire, and can be highly polished. It is stated† that this process is now largely made use of in Germany.

Somewhat analogous results are obtained by Brin Bros, (p. 417) without the use of metallic aluminium (similar to those claimed also by Baldwin, p. 426), but while in Dr. Gehring's process the coating would be formed on any surface, in these other processes the presence of the metallic base is necessary, and an alloy with a few per cent. of aluminium is formed on the surface of the object and penetrates a little way into its interior. Such a coating, then, is simply a transformation of the outer layer of metal into an alloy with a small quantity of aluminium, and could possess very few of the qualities of aluminium, but might possess, as an alloy, qualities superior to those of the original metal.

H. C. Broadwell, of Philadelphia, claims that sheet-iron can be coated with aluminium by first cleaning the iron carefully, then immersing it in a bath of molten aluminium, and while immersed rubbing its surface vigorously with a steel brush. If a

* German Patent, 29,891 (1885).

† Engineering and Mining Journal, Feb. 13, 1886.

temperature over a red-heat is used, the iron will probably be attacked, because this happens when melting aluminium in an iron crucible (p. 444). I cannot learn, however, that the process has been applied on a commercial scale. If such a process could be made practicable, we should have in the aluminium-coated plates a rustless substitute for tinned sheet-iron, the only drawback to which would be that it is not so easily soldered as sheet-tin.

Plating on Aluminium.

Deville says: "The gilding and silvering of aluminium by electricity is very difficult to do satisfactorily and obtain the desirable solidity. M. Paul Morin and I have often tried it by using a bath of acid sulphide of gold or of nitrate of silver with an excess of sulphurous acid. Our success has only been partial. However, M. Mourey, who has already rendered great services in galvano-plasty, gilds and silvers the aluminium of commerce with a surprising perfection, considering the little time he has had to study the question. I also know that Mr. Christofle has gilded it, but I am entirely ignorant of the methods employed by these gentlemen.* The coppering of aluminium by the battery is easily effected by M. Hulot by using an acid bath of sulphate of copper."

Tissier Bros. state that aluminium can be gilded without using a battery by preparing a solution as follows: "Eight grammes of gold are dissolved in aqua regia, the solution diluted with water and left to digest twenty-four hours with an excess of lime. The precipitate, with the lime, is well washed, and then treated with a solution of twenty grammes of hyposulphite of soda. The liquid resulting serves for the gilding of aluminium without the aid of heat or electricity, the metal being simply immersed in it after being previously well cleaned by the successive use of caustic potash, nitric acid, and pure water."

* M. Mourey has since stated that his means are galvanic, and that he has no trouble in depositing silver and gold in six different colors—shining, matt, or dull—but does not describe his methods.

Aluminium can be veneered with other metals in a manner strictly analogous to the reverse process described by Deville. For example, Morin describes the veneering with silver as follows: "Sheet silver is laid on the clean aluminium surface, a steel plate placed over the silver, and the whole bound into a packet with fine copper wire. Two large cast-iron blocks are heated to a dark red heat, the packet placed between them and a pressure of 1 ton to the square centimetre (10 tons per square inch) applied gradually and sustained for 15 minutes. When removed from the hydraulic press they can be rolled like silvered copper when brought to the proper heat. The plating with gold succeeds best if a thin leaf of silver is slipped between the two sheets of metal, the operation proceeding then exactly as above. Platinum may be plated on aluminium just as easily as silver."

The firm of J. and A. Erbslöh, of Barmen-Wupperfield, Germany, put on the market copper-sheet on which aluminium has been rolled, but they keep their mode of procedure secret. They also roll together gold and silver with aluminium.

Wegner and Guhrs, of Berlin, plate aluminium electrolytically with gold, silver, nickel, copper, bronze or brass. Their process has been very successful in practice, depositing directly on the aluminium. The baths recommended are solutions containing potassium cyanide, and require less than the ordinary power for precipitation. The same investigators have discovered processes for coloring aluminium black, brown, or almost any other shade, the colors being permanent.

Neeson, a German chemist, recommends first dipping the aluminium in alkali till bubbles of gas appear, then into a solution of corrosive sublimate, then again into the caustic, and finally into a salt of the desired metal, which is then deposited on the aluminium as an adherent film.

Uses of Aluminium.

Deville wrote in 1862: "Aluminium is the intermediate metal between the noble and the base metals." This was true

then of its price as well as of its properties; it does not withstand chemical agents in general as strongly as the noble metals, but it withstands air, water, sulphuric acid, nitric acid and sulphuretted hydrogen—which is not the case with iron, copper, or even silver. We have then a semi-noble metal; but while silver, gold and platinum have extremely small prospect of becoming noticeably cheaper, yet the time is probably not far distant when we shall have our semi-noble metal at the price of the base ones. This affords the immense future for aluminium. Whatever its price, it can only replace gold or platinum because of its lightness; it already replaces silver especially because of its resistance to sulphur, as well as for its lightness, besides being cheaper; it can only replace the common metals, at its present price, for uses where its lightness is an extraordinary advantage. But when its price is down to that of these baser metals, it will begin to replace them by virtue of its other superior qualities, chemical and physical; aside from its lightness it will win a large field simply in comparison with them on its merits as a metal. Thus, there are wide applications now almost unthought of, because the high price has been a blank wall to stop its use; but as it cheapens more and more, we hear every day of new uses brought to light. Thus its sphere will widen until, since its ores are as cheap as those of iron, it will approximate in utility to that universal metal. At the time of this writing, (1895) there are only four metals which are cheaper bulk for bulk than aluminium; viz.: iron, zinc, lead and copper; and the amount of aluminium produced yearly is increasing much more rapidly than any of these. Aluminium has therefore already won its place among the common metals of everyday life. It will, of course, be many years before it outstrips any of these, but I believe the ultimate goal of aluminium industry will be reached only when it stands next in importance and value of annual production to iron. From this time forth, every year will see substantial advance towards this goal, and the next century may see this end attained.

Chronologically, the first article made of aluminium was a

baby-rattle intended for the infant Prince Imperial of France, in 1856. For this purpose it no doubt answered excellently, from its brightness, lightness, ring and cleanliness, but only a prince could afford to possess one in those days. In the next few years it was used for all sorts of articles of ornament and luxury. It was found well-suited for fine jewelry by reason of its adaptability to being cast and carved, the beautiful reflections from a chased surface, its color, matching well with gold, and the absence of odor. But it did not keep its polish so well as gold, and perhaps more to the point, it did not stay in fashion long; so that the rage for aluminium jewelry subsided almost as fast as it had arisen, and it is only quite lately that it is being used again in this way to any extent. Then the French, with their ability for producing artistic furniture, used it for inlaid work on carved mouldings, cabinets, table tops, etc., but this application never exceeded a limited extent.

It is said that the Emperor's interest in aluminium, in 1854, was aroused partly by the idea that if it could be had cheaply it would wonderfully lighten the weight of military equipments, such as spurs, buttons, sword-handles, sabre-sheaths, helmets, and the imperial eagles. A helmet was made for the Emperor's cousin, the King of Denmark, which when gilded, ornamented, and fitted up complete, weighed only one and one-fifth pounds. The weight of the imperial eagles was lessened from eight pounds to nearly three pounds, it being remarked that "since they were gilded, only the bearer perceived the difference." When Garopon, in Paris, was furnished with very fine wire by Vaugeois, he was immediately successful in working it into embroidery, lace and passementerie. This use of aluminium has also a military bearing, since aluminium wire can be used instead of silver in embroidering banners, and especially in working figures and epaulets on soldiers' uniforms.

Military uses.—Within the last five years, several governments have taken up the questfon of aluminium for military uses. The Germans have taken the initiative. They appointed a commission to test its suitability for canteens, cooking uten-

sils, pontoons, and, in fact, almost every other metallic part of a soldier's equipment. As a result of this inquiry the German army is being permanently equipped with aluminium cooking utensils, canteens and pontoons. Every ounce of weight thus saved means as many more cartridges carried per man. In the Russian army, ammunition wagons with aluminium frames are being tried. The United States have not officially adopted any aluminium articles in their military service, but Lieut. Brown has been making many of the service articles in aluminium and sending them to headquarters at Washington. It is to be hoped that his efforts will be successful, and that our country will not be behind Europe in increasing in every way the comfort and efficiency of the military.

Naval use.—Within a very short time it has become possible to build aluminium vessels. Escher, Wyss & Co., of Zurich, were the first in this line, building a naphtha launch entirely of aluminium, even to its smoke-stack and rigging. Several others have been built by the same firm; also, a sailing yacht and a flat-bottomed boat for inland navigation in Africa. The naphtha yacht "Mignon" built by them is 43 feet long, 6 feet beam, draft 2 feet 2 inches. The keel, stern and stern posts are of forged aluminium with a section of 7 in. by 1 in. The frames are angles of 1 inch wide by 1 inch deep, one-sixteenth inch thick. The shell is three thirty-seconds of an inch thick. The whole is held together by aluminium rivets. The rigging is of aluminium wire, not painted. All the machinery is of aluminium, including the propeller, except the cranks and shafting. The engine is 6 horse-power, and on the trial trip the boat attained a speed of eight miles an hour. A writer in Dingler's Polytechnic Journal compares 3 yachts of 10 tons displacement, made respectively of wood, steel and aluminium. He finds that the light frame of the latter permits heavier ballast, thus lowering the centre of gravity, and increasing the stability. In reckoning the cost, the value of the worn-out hull was not considered, and aluminium was taken at its price in 1892, which is 50 per cent. above its present price.

	Wood.	Steel.	Aluminium.
Relative cost	1.0	1.0	1.8
Centre of gravity below water	0.43 m.	0.47 m.	0.65 metre.
Relative sail area	1.00	1.06	1.35
Relative speeds	1.00	1.03	1.16

The calculation with regard to the stability, as shown by the lowering of the centre of gravity, will hold for any type of vessel.

The *Vendenesse*, a sea-yacht constructed at Saint-Denis, France, in 1892, built for Count Chabonne, is of 12 tons displacement, contains a little over one ton of aluminium, a saving in weight over steel or wood of two tons. A prolonged stay in the harbor at Havre has proven that the sea water has practically no effect on the hull, and with 11 tons of lead in the keel there was no straining or weakening in a heavy sea. Immediately thereafter the French Minister of the Marine decided to have an aluminium torpedo boat constructed, to be carried by the warship La Foudre. This was built by Yarrow & Co., and had its trial trip in September, 1894. The vessel is 60 feet long, 9 feet three inches in depth. The aluminium was strengthened by being alloyed with 6 per cent. of copper, which increased its tensile strength to 35,000 pounds per square inch. All frames were made 25 per cent. larger than if they were steel, and therefore weighed exactly one-half as much. The weight of the hull alone was reduced from 4 tons to 2 tons. The extra cost of the material, compared with steel, was $5000, for the whole boat, in return for which there was a saving of 2 tons in dead weight and an increase of 3.5 knots in speed over vessels of the same class and dimensions made of steel. The maximum speed attained was 22.2 knots, and the average 20.5 knots. The total weight with steam up and coal in the bunkers is 10 tons, the horse-power of the engines 300.

While this torpedo boat is the largest vessel so far constructed in aluminium, yet we may expect in the near future to hear of still larger ones, particularly pleasure steam-yachts, being constructed of it. At the same time we must not omit to mention

the aluminium boats constructed by Rossiter & Co., of Baltimore, for the explorer Wellman, and which did such good service in the battle with ice and frost that he has nothing but praise for them; nor the aluminium rowing-shells built by Galanaugh, of Philadelphia, in one of which the local champions lowered their course record 8 seconds the first time they rowed in it. Hunting boats and small row-boats are being made at present in considerable numbers.

The yacht "Defender," which defended the American Cup against the English yacht Valkyrie III, in 1895, has its hull of aluminium-bronze plates to the water line, and aluminium plates alloyed with 3 per cent. of nickel above the water line. The upper frames and deck beams are also of the nickel alloy. The aluminium work is very properly protected by painting. This is undoubtedly the staunchest and fastest racing yacht ever built.

Vehicles.—For apparatus which has to be moved around, aluminium is rapidly coming into extensive use. Bicycles are being made very successfully, notably by a St. Louis firm, who harden the aluminium with copper and zinc, and cast it very solidly under pressure. Their frames have stood even more severe tests than steel ones, and yet have only one-half the weight. Aluminium racing sulkies are used for fast running, and two records, broken during 1894, were by horses carrying aluminium shoes and pulling aluminium sulkies. One of these is said to have weighed only 20 pounds entire. An aluminium cab is running in Paris, and a railway carriage of this metal will probably appear soon. In fact, many of the doors, sash-frames, handles, racks, etc., formerly made of iron or brass, have already been replaced by it.

If the problem of äerial navigation is ever satisfactorily solved, we may expect to see aluminium largely employed in constructing the machines. Professor Langley, at Washington, and Maxim, in Great Britain, represent the utmost so far accomplished in this direction, and they use sheet and wire-rope of aluminium.

Decorations.—The sulphurous acid of the air or of the products of combustion likewise leave aluminium untouched, while they quickly blacken silver. This caused its early use for reflectors, for, while not taking at the start so high a polish as silver, yet it keeps its lustre indefinitely; it has also the added superiority that its slight blue tint partly neutralizes the yellow color of artificial light, thus reflecting a very soft, white light. Even the unconsumed gas itself, containing sulphuretted hydrogen, does not blacken the aluminium reflector in the least. It would follow that as a material for candelabra, chandeliers, or, in general, for any objects exposed to the air in dwellings, aluminium keeps its color in a manner far superior to silver. This explains the superiority of aluminium leaf to silver leaf for almost any use, either for picture-frames or mural decorations indoors, or for outside decorations, especially in large cities where the air contains much sulphurous acid gas Since aluminium leaf can be purchased in books at as low a price as silver leaf, it has entirely displaced the latter.

Some of the latest uses in this line are extending very rapidly, such as reflectors for locomotive headlights, in the ceilings of public halls, and shades for incandescent electric lights. For the first mentioned use it is vastly superior to the present nickel reflectors, and the Philadelphia firm manufacturing them can scarcely supply the demand.

Much of the fancy grill-work used for decorating desks, shelves, stair-cases, elevator shafts and elevators themselves, is being made in aluminium. It is strong enough for all such purposes, and for the elevator car, which is lifted many thousands of feet in a day, the saving in weight is of great advantage.

Mine-work.—For underground work, aluminium possesses great advantages over iron because of its non-rusting. Mine cars and lifting-cages are made of it to great advantage, because every pound of dead weight saved on these allows so much more coal or ore to be lifted by a given power. Aluminium safety lamps are also a great improvement, not only from their

lightness but because the high conductivity of aluminium gauze keeps the flame from passing through it so quickly as through brass gauze. Several collieries around Essen, Germany, are using these, as also aluminium lamps for the miners' hats.

Medicine.—The harmlessness (innocuousness) of aluminium gives it exceptional advantages for use in surgery. M. Charrière made, in 1857, a small aluminium tube for a patient on whom tracheotomy had been practiced. The tube was very light, and, therefore of little inconvenience to carry, and after wearing for some time the metal was very little attacked. After a long time a very thin, almost invisible coat of alumina formed, which was absolutely without harmful effect on the patient. Under the same circumstances a silver tube would have been blackened and corroded by the purulent matter. Aluminium has been used very advantageously for suture wire, and we can also deduce from this the great advantage there would be in making various surgical instruments of this material, not only from their not being corroded, but also because of the decrease in weight of the instrument case which the physician has to carry, often for long distances. We would also notice the comfort to be derived from this large decrease of weight in any sort of surgical appliances, braces, trusses, etc., which have to be worn and carried about continually on the person.

Dental plates have been cast of aluminium, and, when complete, their weight is only a fraction of that of gold plates. But two difficulties are met in this application; aluminium contracts very much in solidifying, and it is found almost impossible to cast it solidly on to the teeth; also, pure aluminium is slightly corroded by the acids of the food and the saliva. To overcome these difficulties, Dr. Carroll (see also p. 446) adds a little copper, which he says decreases the contraction so much that the teeth remain solidly imbedded in the plate; while the addition of some platinum and gold renders it unalterable in the mouth. The aluminium plates possess the added advantage that on contact with metallic substances no disagreeable electric current is set up. It is a matter of common experience that if

a bit of iron, *e. g.*, a carpet tack, is held in the mouth and touches a gold plate, a disagreeable bitter sensation is at once felt, due to electro-magnetic action. For this reason, some persons even refuse to wear the gold plates; but it is stated by those who have worn aluminium plates that no such effect occurs with this metal. Further, broken teeth, etc., can be again attached by means of rubber cement, the sulphur of the rubber having no action on the aluminium.

Dr. Fowler* obtained a patent for using aluminium in dentistry in combination with vulcanite, which consisted in mixing granulated aluminium with a vulcanizable compound and then vulcanizing in the usual manner. The patent also claimed the inlaying of vulcanite articles with aluminium, the joining of articles made of vulcanite or rubber with clasps or rivets of aluminium, and the use of aluminium tacks, nails, etc., in making rubber shoes.

Scientific Instruments.—We have long been familiar with the appearance and advantages of the aluminium opera and field glasses, but the difficulties met in working the metal, and more especially the monopoly of their manufacture by a few firms, have kept the price of these desirable instruments at unreasonable figures. Since there are but a few ounces of aluminium in the frames of these glasses, there is no reason at all why purchasers should have to pay double price for aluminium mountings over those of other metals; and with the present wide development of the employment of aluminium I hope it will not be long before some enterprising American firm will make these instruments and sell them more nearly at their proper cost. Long before 1860, Loiseau, of Paris, made for Captain Gordon a beautiful sextant, which only weighed one-third as much as those ordinarily made of brass. For an instrument which one is obliged to hold to the eye by one hand for several minutes, making observations from the rolling deck of a vessel, this property is of the greatest convenience, as any one will at-

* U. S. Patent, 46230, Feb. 7, 1865.

test who has had his wrist ache after making the noon observation. Similarly, a difference of a pound in the weight of a tourist's glass may hardly seem much on lifting the glass, but we have trustworthy witnesses who say that it makes twenty pounds difference towards the end of a long walk. I suppose that sextants have not been more generally made of aluminium because of its high price; this is now much less of an obstacle than formerly, and it is to be hoped that the instrument-makers will take up this subject again with fresh vigor. Engineering instruments, as transits, levels, etc., are made with aluminium frames, but it is certain that they have not come as yet into anything like common use. With cheaper aluminium it is to be hoped that the makers of these instruments will lighten the burdens of our surveyors by bringing about their general adoption.

For any scientific instrument where the inertia of a heavy moving part is to be avoided, aluminium is the material par excellence. For electrical instruments it has the additional advantage that it is absolutely without magnetism or polarity, if pure, and it thus makes the most suitable material for compass boxes, galvanometer cases, etc.

Aluminium is used for the beams of fine chemical balances as well as for the very small weights used with them. The aluminium weights for this purpose are in general use; they are quite rigid, unattacked by the air, and the smallest weights are of such size as to be quite manageable. The 50 milligramme weight can still be formed into a cylinder and terminated with a button, while the tenth of a milligramme is sufficiently large to be easily handled. The only other metal used for these small weights is platinum, and when the same weights in each metal are placed side by side the difference in size is very striking. Aluminium balances are now frequently seen. Collot Bros., of Paris, made a balance which, with the exception of the aqua-marine bearings, was composed entirely of aluminium. Pure aluminium, however, is hardly rigid enough for the beams, and Sartorius, of Göttingen, was the first to

stiffen these by adding 4 per cent. of silver. With this improvement an aluminium balance has no equal. They are now made by almost all the fine-scale-makers. Troemner, of Philadelphia, places aluminium beams on all his assayers' button balances, while his analytical balance, entirely of aluminium except the bearings, is pronounced the chef d'œuvre of the scale-makers' art. Dr. A. A. Blair, the noted analytical chemist, after using one for several years, states that for sensitiveness and quickness it is unsurpassed, while the gases of the laboratory have not had the slightest effect on it. The same maker constructs large bullion balances of the same material.

*Coinage.**—Aluminium has been repeatedly proposed as a material for coins. As far back as 1856 Henri Montucci, a member of the French Academy, proposed this use to the Emperor. It then combined high price with lightness, and if it had always kept that high value it might have been substituted for silver. But what a mistake it would have been! A single invention, which reduced the price of aluminium one-half, would have depreciated the value of this currency to the same extent. The matter is different now, for two reasons; first, the price of aluminium is so low that future reductions can only be by cents per pound; second, as aluminium is so cheap it is out of question that it be used for money of final redemption, but this same fact brings it into direct competition with nickel and bronze for minor coinage.

Granted that aluminium can be suitably hardened by adding a few per cent. of some other metal, and there is not a single requirement for a metal for coinage which such an alloy does not possess. For instance, the conditions to be filled are:

1. Capability of being cast, rolled, punched, stamped, and taking a fine impression. Aluminium does this as well as any metal known.

2. Durability. Aluminium is a very smooth metal, possess-

* Further information than given here may be found in an article by the writer in the "Aluminium World," January, February and March, 1895.

ing a sort of inherent, anti-friction quality, and even the pure metal, hardened by stamping, wears remarkably well.

3. Non-corrosion. Aluminium resists corrosion better than copper, bronze or any of the base metals. In addition to this is the fact that if it does corrode slightly, the salts formed are entirely harmless. No other metal compares with it in this regard.

4. Cheapness. Since small coins are only of nominal value, it becomes a matter of profit to the government to make the coin as cheap as it can. But aluminium ingot at $0.50 per pound is equivalent for coining purposes to nickel alloy at $0.14 and bronze at the same figure. But these really cost $0.20 and $0.10 respectively, so that aluminium would cost slightly more than one and less than the other. It is therefore clearly suitable in this respect.

5. Large supply. If all the nickel and copper coins in the United States were replaced by aluminium, the annual amount required would be about one hundred tons. This is only ten per cent. of the total amount which will be produced this year. When nickel was adopted for coinage the supply of it was relatively much less abundant.

6. Difficult to counterfeit. Of all ordinary metals, aluminium would be the hardest to counterfeit. Further, the inducement to try to counterfeit minor coin is much less than with larger money, and this condition is not of as great relative importance.

7. Lightness. The people of the United States are carrying around probably 3,000 tons of minor coins. If this could be made 2,000 tons less, who would not favor an immediate change? Granted, therefore, that aluminium can be suitably hardened, there is not a single requirement in which it is not equal to the metals now in use for minor coin, and in two ways it is far superior to them, viz., innocuousness, cleanliness and lightness. It is to be hoped that the United States government will recognize the advantages of such a change and lead the world in making its minor coinage of aluminium.

Chemical Apparatus.—Dr. George Bornemann has critically

tested some aluminium utensils made by Max Kaehler and Martini of Berlin, and reports as follows:* An aluminium hot-air oven is heated quicker and to a higher temperature than a copper one; the distribution of temperature is more even; no chemical alteration after daily use for ten months. Water baths evaporate water very quickly, and one tested suffered no loss in weight or disfiguration in three weeks' use. Rings and pincers stay bright; lacquering is unnecessary. Sand baths remain unaltered in weight, but care must be taken not to overheat them. Stove-pipe, tripods and hot funnels are very desirable. Crucibles are not to be recommended, as they cannot be used above incipient redness.

Several chemical companies are using aluminium stills, evaporating dishes, etc., particularly in the manufacture of medicinal extracts, etc., with great satisfaction.

Culinary Utensils.—No less than six large firms are at present making aluminium cooking utensils in the United States. The pioneer was the Illinois Pure Aluminium Company, at Lamont, Illinois, whose factory was put in operation early in 1893. For about a year, the success of the venture was uncertain, but everyone who used the utensils recommended them so highly that the trade then began to grow, and at present the supply is not equal to the demand. America has certainly taken the lead in this application of aluminium, which, it is the writer's firm opinion, will overshadow in magnitude all other applications of the metal.

The well-established advantages of these utensils are:

1. Non-poisonous. This cannot be said of any other utensils except the expensive and fragile enamel-lined vessels.

2. Easily cleaned. It is very seldom that anything burns fast or sticks to an aluminium utensil. If such does happen, a soaking in water removes it entirely.

3. Not corroded. None of the acids found in foods have any perceptible corrosive action on aluminium. Daily use for

* Chemiker Zeitung, January 11, 1893, p. 34.

three years, in every way, has left no signs of corrosion on a utensil in use at the writer's home. In weight, the utensil has lost one-quarter of an ounce, which would point to about a hundred years as the probable time it will take to wear out.

4. Do not scorch. It is a singular fact, that it is almost impossible to scorch even the most delicate foods in an aluminium vessel. This is a well-attested fact, and is due to the great heat conductivity of aluminium preventing a high local temperature at any one spot. On this account aluminium is not well-suited for frying-pans or skillets, in which the object is to brown the food, that is, to superficially scorch it in a measure.

5. Cook quickly. Kettles and sauce-pans have their contents heated very quickly, because of the great facility with which the metal conducts heat.

6. Lightness. Only one-third that of other utensils.

7. Durability. Do not corrode, and show very little wear outside; besides, there is nothing to crack off, as in enamel wear, no coating to wear through, as in tinned wear, and it will not crack like cast-iron ware. The utensils, if properly treated, are almost indestructable and will wear almost indefinitely.

I have no hesitation in predicting that when the general public have proven by actual experience the merits of these utensils, they will displace all other kinds in the kitchens of all except the poorest classes. Already, they are being largely used in hotels, restaurants, railway cars, steamships, large institutions, and by makers of preserved food and confectionery. Several makers of pickles, condiments and soups have adopted them. For such use on a large scale, the kettles are made with a double bottom and are heated by steam.

Table Ware.—The writer does not recommend aluminium for use on the table for such articles as are subject to considerable wear. Spoons, knives, forks and plates, especially, very quickly lose their high polish, and become dull. However, for articles which do not meet heavy wear, its use is advantageous. Especially is this the case with soup-tureens, vegetable and meat covers and dishes, in which the property of aluminium of

keeping hot a long time is of the greatest advantage. Aluminium chafing-dishes are also highly recommended. For sugar bowls, cream and water pitchers and trays, aluminium does very well, its particular advantage over silver-plate in these cases being that it does not blacken. Every housekeeper knows what an amount of cleaning and polishing this saves. Whole services of plate have been made in aluminium.

Constructions.—For purposes of construction, aluminium cannot replace steel, except where expense is a secondary consideration, and lightness or resistance to oxidation are the first conditions to be filled. If in a machine a certain moving part must be as light as possible, that piece may be made of aluminium, while the rest is still of iron or steel. In torpedo boats, railway carriages, cabs, wheel-barrows, or any apparatus which is moved around continually, lightness is a prime consideration, and the substitution of aluminium for steel is simply a question as to whether the lightness gained compensates for the increased cost. For a stationary structure, the question is simply one of the minimum cost for a given strength, and in such fields steel is king, and will stay at the head until aluminium can compete with it in price, bulk for bulk, which is a very remote contingency.

It was said that a 16-story building in Chicago was to be built of iron frames with plates of aluminium fastened on for a facing. These plates were to be 36 inches by 20 inches, and three-sixteenths of an inch thick, composed of an alloy of 90 per cent. aluminium and 10 per cent. of copper. The information, however, was partially misleading; the alloy used was aluminium bronze, 90 per cent. copper and 10 per cent aluminium.

Batteries.—Since aluminium is so inert in presence of nitric acid, it forms a good substitute for platinum in the Grove battery. Hulot used a couple composed of an aluminium plate and a zinc plate amalgamated for some time previous to use. The exciting fluid may be either dilute nitric or sulphuric acid. With water, charged with one twentieth part of sulphuric acid

at 66°, the cell gave for some hours a current at least equal to that afforded by platinum in the same conditions. After six hours its original force was diminished one-fifth, and at the end of 24 hours the cell was not entirely polarized, but still gave one-fourth its original current. To restore the electro-negative character of the aluminium it was only necessary to immerse it an instant in nitric acid and wash well. Col. Frishmuth, of Philadelphia, used aluminium-zinc batteries for several years in electrolytic experiments as well as for ordinary house use, and has stated that it answered as well as platinum, and in some cases gave greater power.

From experiments made by the writer (p. 91), it appears that the purer aluminium is, the more it resists nitric acid. It is therefore recommended to make battery plates out of the purest obtainable aluminium, and on no account to use an alloy.

Lithographic Plates.—Aluminium is being successfully used to replace the expensive Solenhofen lithographic stone. One inventor gives the directions for using it as follows:* "The plates are cleaned, levelled and polished, and then prepared for printing in one of two ways. One way is to apply "transfers" in chalk or ink to the plates, on which "facings" are then produced by the action of suitable acids. Or, the plates may be first treated with the acids until their surfaces have an opaque white appearance, then, after rinsing with a solution of alum or of acetic acid to enable the plates to take them, "transfers" are applied and the plates then subjected to a second treatment with acid, this time more concentrated than before. Acids suitable for this purpose are ortho-, meta- or pyro-phosphoric, or hydrofluoric. These acids form salts of aluminium which are insoluble in water, and which, while attached to the plates, retain enough water to prevent the adherence to the parts acted on of the oily inks employed for coloring the other parts of the plates. An acid mixture such as is used in the process is com-

* English Patent 16,312; Sept. 12, 1892. O. C. Strecker. Mainz, Germany.

posed, for example, of 10 parts of a solution of gum, 3 of a saturated solution of gallic acid, and 1 of a 20 per cent. solution of ortho-phosphoric acid.

Krebs, of Frankfort, recommends sponging the polished surface with a dilute solution of caustic soda, and in order that the surface shall take the ink it is covered with a varnish composed of zinc white, potash and saltpetre moistened with alcohol.

The Ellery-Howard Co. of New York are using aluminium plates for printing, and report them entirely satisfactory.

Flash-light Powder.—Very fine aluminium filings, or aluminium powder made by grinding up the leaf, makes an excellent flash-light for photographic purposes. Its advantages over magnesium are that it is cheaper, not so liable to explode in preparation, and produces none of the white fumes so disagreeable when using magnesium. Villon, the first to use it, recommends the three following mixtures:*

	I.	II.	III.
Aluminium powder	8	10	10
Chlorate of potash	20	25	25
Sugar	2	—	2
Nitrate of potash	—	5	—
Potassium ferro-cyanide	—	—	3
Sulphide of antimony	—	4	—

These powders may be ignited in various ways, but the best and safest is to project them into the flame. The following mixture also gives a very intense light:

Aluminium powder	20 parts.
Lycopodium	5 "
Nitrate of ammonia	1 "

Villon recommends using a lamp fed in its centre with a jet of oxygen.

Mr. Alexander Black, of New York, recommends the following mixture for very rapid flashes:

* Reveu de Chimie Industrielle, 1892.

Aluminium powder	5 parts.
Chlorate of potash	15 "
Sulphide of antimony	3 "

The London *Lancet* recommends for medical photography, laryngoscopic, auroscopic and other demonstrations, the burning of a thin aluminium ribbon in an ordinary spirit-lamp or blow-pipe flame.

Miscellaneous.—We can do no more than mention the various other uses to which aluminium has been put.

Cash registers and conveyers.
Watch and key chain. Dog chains.
Horse-shoes, bits, bridles, stirrups, harness trappings.
Insoles for shoes, to keep out dampness. Shoe horns.
Surgical instruments, suture wire, tracheotomy tubes.
Braces, trusses, supports for various parts of the body.
Fine wire woven into passementerie, uniforms and flags.
Metallic parts of trunks and traveling bags.
Keys—hardened by drop-forging cold.
Watches, compasses, knife-handles.
Cases for cigars, cigarettes, matches, spectacles.
Teething plates for infants.
Artificial limbs and noses.
Pen and pencil holders. Slate pencils. Paper cutters. Thimbles.
Pocket rules, scales, levels.
Toilet articles, backs of brushes, combs, etc.
Walking sticks, umbrella frames, billiard cues.
Picture frames, mirror frames, placques for hand-painting.
Puff boxes, collar and cuff boxes, perfume bottles.
Hat pins, hair-pins, bracelets, brooches, rings, etc.
Candlesticks, fancy baskets, card receivers, ink-stands.
Cigar-holders and pipes, with amber mouthpieces.
Moulds for forming cigars.
Patterns and models for metal castings.
Eye-glass frames and chains.
Name-tags on flying pigeons.

Boot-trees and lasts in shoe factories.
Connections in rubber hose, clasps on rubber garments.
Blades for ventilating fans, especially those run by electric motors.
Business and visiting cards.
Body of ice and roller skates.
Photographic cameras, tripods, "kodaks."
Padlocks, especially for portable use.
Car roofs, railway semaphore signals.
Shelves on which to evaporate fruit.
Musical instruments, cornets, trombones, horns, drum frames.

CHAPTER XIV.

ALLOYS OF ALUMINIUM.

ALUMINIUM unites easily with most of the metals, the combination being usually accompanied by a disengagement of heat, which is particularly active in the case of copper. (I do not know that any attempt has been made to measure this heat quantity except in the case of iron). This circumstance is taken to be an indication that these alloys are chemical combinations of the metals rather than mere mechanical mixtures. Lead and antimony appear to be the only metals not alloying with it easily. The practical production of these alloys from the metals is in general a very easy operation. The aluminium may be melted in a carbon or magnesia-lined crucible, without a flux, and the other metal simply thrown in; it falls to the bottom, melts, and is absorbed by the aluminium.

In some few cases the alloying metal must be mixed in powder with finely-divided aluminium and heated together in a closed crucible, but this is only exceptionally the case. Again, a bar of aluminium may be taken in the tongs and held under the surface of another metal already melted. This is the best method of introducing small percentages of aluminium into other metals, unless we may except the adding of a small quantity of rich alloy to pure metal, thus diluting the percentage of aluminium to the desired quantity. Most of the alloys thus produced are improved by careful remelting, the aluminium seeming to become more intimately combined. The alloy made in the first operation is often not entirely homogeneous, but becomes more uniform, and finally perfectly so, by repeated fusions. Very few of the alloys will liquate; in general the alloy acts as a single metal. However, in some cases where

the alloy is not of a very definite or certain composition, a liquation may take place, leaving as a residue an alloy with different proportions from the fluid metal running off. In the case of volatile metals, they can usually be driven out of the aluminium by keeping the alloy melted and exposed to a heat sufficient to drive off the volatile metal.

The useful alloys of aluminium seem to fall naturally into two groups: 1. Aluminium containing not over 10 to 25 per per cent. of other metals; 2. Other metals containing not over 10 to 15 per cent. of aluminium. In almost every case, alloys between these limits possess no useful properties, and are mere chemical curiosities.

1. Aluminium is too soft to stand much wear, or to keep a high polish, and too weak to support much stress. In order, then, to make it harder, stronger and better wearing, and at the same time to keep its valuable lightness and beautiful color, it is alloyed with a small percentage of some suitable metal. Silver, nickel, copper or tin is frequently used for this purpose, as well as some other metals, as will be explained at length in the succeeding consideration of the alloys. It might here be remarked that the color of aluminium is not radically altered, except by very large proportions of the foreign metal, by reason doubtless of our proportions being expressed by weights, while the influence of a metal in changing the color of another depends more on its volume. For instance, an alloy of 50 per cent. aluminium and 50 per cent. copper has the color of aluminium, an alloy with 70 per cent. of copper still has the white color of aluminium, but with 85–95 per cent. of copper the alloy is yellow. It has experimentally been observed that the color appears to change from white to yellow at about 82 per cent. of copper. If we combine equal volumes of copper and aluminium, our alloy would contain about 77.5 per cent. of copper. If then, we acknowledge the principle that the metals affect each other's color according to the proportions by volume in which they combine, we see the explanation of both facts—the very small influence of foreign metals in changing the color

of aluminium, and the great influence aluminium has in whitening or changing the color of other metals. Again, precisely the same principle holds when we consider the specific gravity of these alloys, except that in this case our fundamental proposition—that the metals affect each other's specific gravity according to the proportions by volume in which they combine—is capable of mathematical demonstration. But we have also to consider in the case of the specific gravity a most curious phenomenon, which is, that aluminium seems to be able to absorb several per cent. of certain metals without increasing in volume, and, in some cases, it even decreases in volume. The basis for this statement is easily recognized. For instance, some aluminium was cast in a mould which gave a piece of a certain size weighing 480 grains. The aluminium was melted and 5 per cent. of silver added to it; a piece was then cast in the same mould. Now, if the aluminium had absorbed the silver without increasing in volume, the second test piece should have weighed 504 grains; it weighed 502 grains, showing only the merest dilatation of the aluminium in absorbing 5 per cent. of silver. So, if we calculate from the analyses of commercial aluminium given in Chapter III., the specific gravity of the alloy (for we can so consider it), on the supposition that all the foreign elements are absorbed by the aluminium without change of volume, it will be found that in almost every case this calculated specific gravity is very close to or even below the observed gravity, showing in the latter event that even a condensation beyond the volume of the aluminium had taken place. This condensation seems to offer a natural explanation of the hardening and strengthening effect produced by the addition of a small quantity of the metals named.

2. At the other extreme of the scale of alloys we have those containing a few per cent. of aluminium. In general, the effect of a small quantity seems to be principally a notable increase in strength and a striking change in color of the highly colored metals. A very small quantity has little effect in reducing the specific gravity, but as the quantity increases, the effect is what

we would infer from the previous remarks on specific gravity. The reason of this is that the condensation in alloying taking place with these alloys is so great that the metal absorbs the aluminium without any noticeable increase of volume, and its specific gravity may be even increased slightly at first. This great condensation offers a partial explanation of the strengthening of the original metal, since its texture is finer and its hardness increased. After a certain small limit in the percentage of aluminium is passed, the beneficial effects alluded to are overpowered by the influence of crystalline chemical combinations between the alloying metals, and the alloy quickly loses strength and malleability. With the exception of copper and tin, 5 per cent of aluminium is the limit of the useful alloys at this end of the scale.

The alloys of aluminium with copper and iron have become so important that it seems proper to devote separate chapters to their consideration; the remainder of this one will therefore treat of the alloys with metals other than copper and iron. I wish to remark, that as the tertiary alloys cannot be rigorously classified, we will have to place them under the alloys of that metal which, besides aluminium, seems to be their characteristic ingredient. Some of the combinations of aluminium with metalloidal elements, which might possibly be looked for in this chapter, are described in Chapter V. among the compounds of aluminium.

Aluminium and Antimony.

Tissier Bros. state that they were unable to get a homogeneous alloy of these two metals.

Dr. C. R. A. Wright * concluded that there is no commercially valuable alloy of these two metals. He found that when aluminium is melted in a crucible and lumps of antimony dropped in, they fall to the bottom and melt quickly. The two metals remain separate until stirred, when part of them unite to an alloy which immediately solidifies because of its high melting

* Journal of the Soc. of Chemical Industry, June, 1892.

point, while the remainder stays as a fusible alloy of much lower melting point. This solidified alloy has the composition AlSb (81.6 per cent. of antimony), is a gray mass with an iridescent lustre, and does not melt below 1000° C., which is most remarkable, considering that the melting points of its ingredients are 625° and 425° respectively. The alloys low in aluminium look like antimony, those low in antimony are somewhat spongy, and they all slowly disintegrate in the air and disengage hydrogen in water.

Roche * arrives at somewhat different results. He confirms the existence of the alloy AlSb, with its abnormally high melting point, but he claims that aluminium containing less than 5 per cent. of antimony is malleable, and superior in hardness, tenacity and elasticity to pure aluminium. Above this, the hardness and tenacity diminish, until at 10 per cent. antimony the alloy crystallizes in brilliant laminæ. The melting point and ease with which moist air attacks the alloy increase up to 81.6 per cent. of antimony (AlSb), which in moist air or water crumbles to a black powder. Roche recommends these alloys as forming, when melted with other metals, as copper or nickel, alloys of great hardness, strength and elasticity.

† Hoeveler states that he has tried to get Roche's alloys, but with negative results. In no way could he get homogeneous alloys with 6 or 12 per cent. of antimony; even a little antimony makes the aluminium weak and brittle.

The only useful alloy claimed by Roche is the one with less than 5 per cent. of antimony. This, it is true, can be made apparently quite homogeneous, casts and rolls perfectly, and is apparently superior in many ways to pure aluminium, as remarked by Roche. But, after a few months' standing, it will be found that the alloy has disintegrated to such an extent as to be worthless, a point which has probably been discovered by this time.

* Moniteur Scientifique, 1893, p. 269.

† Chemiker Zeitung, July 12, 1893.

Aluminium and Arsenic.

Wöhler* stated that when these two metals were mixed intimately and heated together they combine with a flame, forming a dark-gray metallic powder which smells a little of arsenuretted hydrogen. It slowly evolves that gas in cold water, rapidly in hot.

H. N. Warren† melted aluminium and dropped arsenic upon it. He states that an alloy is thus formed, which is decomposed on raising the temperature; but if the aluminium is used alloyed with another metal, a regulus results.

Aluminium and Bismuth.

These two metals combine easily, the alloys being very fusible, unchanged in the air at ordinary temperatures, but oxidizing rapidly when melted. As small a quantity of bismuth as 0.1 per cent. in aluminium makes it so brittle that it will crack under the hammer in spite of repeated annealings. Tissier Bros. tried 0.5, 2.5, 3 and 5 per cent. of bismuth, but with similar results; with 10 per cent. of bismuth, however, the alloy was not so brittle and could be worked under the hammer to a certain extent, but could not be rolled or drawn. It takes a fine polish and is not attacked by nitric acid or blackened by sulphuretted hydrogen. The same chemists found that on melting 1 part aluminium with 2 parts of bismuth they obtained in the crucible an alloy of the two metals floating on top of pure bismuth. The alloy contained approximately 75 per cent. of aluminium, showing that aluminium does not appear to be able to take up over 25 per cent. of bismuth. This alloy was not so brittle as pure bismuth, and was so distinct from it in the crucible that the two layers could be separated by a blow of the hammer.

Aluminium and Boron.

Deville obtained an alloy rich in boron by melting aluminium

* Pogg. Ann., 1827, ii. 160.

† Chemical News, Aug. 1, 1890.

with borax, boracic acid or fluo-borate of potassium. The alloy is very white, only able to bear slight bending and splits in the rolls. It exhales a strong odor of hydrogen silicide, due to its having absorbed silicon from the vessel in which it was prepared. Metallic boron may be easily extracted from the alloy as both graphitic and diamantine boron. (See also Chapter V.)

H. N. Warren introduced aluminium into a molten mixture of fluor-spar and vitrified boric anhydride which had been heated in an oxy-hydrogen furnace until fumes of boron fluoride appeared. The aluminium immediately set free boron, which dissolved in the aluminium in excess, rendering it crystalline and brittle. The boron thus dissolved is in the graphitoidal state.

Aluminium and Cadmium.

Cadmium unites easily with aluminium, producing alloys which are malleable and easily fusible, and which have been used for soldering aluminium, but only answered that purpose imperfectly. I have not found in any aluminium solder I have tried any advantage gained by replacing zinc by cadmium.

C. R. A. Wright melted together equal parts of aluminium and cadmium, and states that on keeping the mixture some time about 100° C. above the melting point of cadmium it separated into two distinct layers, the upper part of which contained 3.39 per cent. of cadmium, while the lower part contained only 0.22 per cent. of aluminium. The addition of tin prevented the separation and formed a strong ternary alloy.

Aluminium and Calcium.

Wöhler states that an alloy of these metals was obtained by fusing together equal parts of aluminium and sodium with a large excess of calcium chloride. The alloy produced had a lead color, easy cleavage, specific gravity 2.57, and was unalterable in air or water. Analysis showed it to be evidently a mixture, as it contained—

Aluminium	88.0 per cent.
Calcium	8.6 "
Iron	2.0 "

Prof. Mabery describes a peculiar product formed in the electric furnace, consisting principally of aluminium, copper, and up to 3 per cent. of calcium (p. 343).

Aluminium and Chromium.

Wöhler* heated violet chromium chloride with aluminium wire, obtaining an alloy of the two metals, while aluminium chloride volatilized. When 1 part of aluminium was used to 2 of the salt, a gray, crystalline mass resulted, from which excess of aluminium was removed by caustic soda, leaving lustrous, tin-white crystals. When these were heated in the air they became steel-gray, but did not oxidize further. They were unattacked by caustic soda or concentrated nitric acid, but dissolved in hydrochloric acid, with separation of a little silica. Concentrated sulphuric acid oxidized them to a green mass. They were fusible only at a very high temperature. On analysis, this alloy was found to contain both iron and silicon, coming from the aluminium used. Taking these out, the composition, as regards aluminium and chromium, was—

		Calculated for AlCr.
Aluminium	31.6	33.92
Chromium	68.4	66.08
	100.0	100.00

Professor J. W. Langley has alloyed chromium with aluminium by dissolving chromium oxide in a bath composed of fused fluorides of aluminium, sodium and calcium, then stirring in metallic aluminium. The latter reduces the chromium oxide, passing into the bath as alumina, while the chromium alloys with the excess of aluminium. It is found that 2 or 3 per cent. of chromium makes the aluminium harder, denser and stronger but decreases the malleability. Over 5 per cent. makes an alloy which is almost unworkable.

* Ann. der Chemie und Pharmacie, 106, 118.

Lejeal produced by Wöhler's method an alloy with 11 per cent. of chromium. It was very brittle, crystalline and impossible to work. It was necessary to dilute to below 3.5 per cent. before the alloy could be hammered or rolled, and this metal was criquè (crickly) after rolling hard. With this percentage, the fracture is crystalline, seggregated in the centre, and gives a tensile strength, annealed, of 12.5 kilos per square millimetre (18,000 lbs. per sqr. inch) with an elongation of 7 to 12 per cent.

Aluminium and Cobalt.

The following alloys have been mentioned, but I know nothing of their properties:—

	Cobalt.	Aluminium.	Copper.	Iron.
Sun bronze	40 to 60	10	30 to 40	—
Metalline	35	25	30	10

Lejeal made an alloy with 6 per cent. of cobalt. It was rolled easily from 8 m. m. thickness down to 2 m. m. without annealing, and gave a fracture which was dark and pretty uniform. An alloy with 3 per cent. of cobalt gave:—

	Tensile Strength.		Elongation.
	Kilos per $\frac{\text{m.}}{\text{m.}^2}$	Lbs. per $\frac{\text{in.}}{\text{in.}^2}$	Per Cent.
Worked hard	22.0	31,000	4
Annealed	16.5	26,000	20

Aluminium and Copper.

(See Chapter XV.)

Aluminium and Gallium.

Lecoq de Boisbaudran has stated that alloys can be formed by melting these metals together at dull redness. The alloys thus obtained remain brilliant, and do not sensibly absorb the oxygen of the air in their preparation. After cooling they are solid but brittle, even when the excess of aluminium has raised the melting point to incipient redness. They decompose water

in the cold, but better at 40° C., with rise of temperature, evolution of hydrogen, and formation of a chocolate-brown powder, which is ultimately resolved into white flakes of alumina.

Aluminium and Gold.

Tissier Bros. state that aluminium can contain as much as 10 per cent. of gold without its malleability or ductility being impaired. The alloy with 10 per cent. of gold can be forged at a red heat as well as aluminium, is a little harder than aluminium but polishes scarcely any better. The color of the alloy is a peculiar brownish tint. The alloy with 15 per cent. of gold can no longer be forged.

The addition of a small amount of aluminium to gold quickly takes away all its malleability. Ten per cent. of aluminium makes a white, crystalline, brittle alloy; five per cent. is said to be extremely brittle, as much so as glass; one per cent. gives an alloy similar to the gold-silver alloy called by the jewelers "green gold." It is very hard but still malleable. Professor W. Chandler Roberts-Austin, in a lecture on the influence of other metals on gold, stated that while a sample of pure gold had a tensile strength of 7 tons per square inch with 25 per cent. elongation, the addition of 0.186 per cent. of aluminium increased its strength to 8.87 tons (26 per cent.), its elongation remaining practically the same—25.5 per cent.*

"Nürnberg gold" is an alloy used to make cheap imitation-gold ware, resembling gold in color and not tarnishing in the air. Its composition is said to be

Copper	90 per cent.
Gold	2½ "
Aluminium	7½ "

G. F. Andrews † has made a large number of experiments with reference to using aluminium in jewelry, and states that

* Journal of the Society of Arts, vol. 36, p. 1125.

† Journal American Chemical Society, July, 1894, p. 485.

the alloys with gold are of little practical use except for decorative purposes. His results are as follows :

Per cent. of Gold.	
6	As white as aluminium but much more brittle.
10	Harder than aluminium, does not work well except at a high temperature. Color light violet brown.
15	Slightly violet, although nearly white. A very soft, fine-grained metal.
50	Beautiful violet color; very soft and spongy.
78	Color peculiar, between pink and violet; very brittle.
90	Pale violet.
94	Violet approaching pink again.

Alloys with very little aluminium leave a bright violet color on the cupel, under the blowpipe. An alloy of 50 parts gold, 45 copper and 5 aluminium takes the color and polish of fourteen carat gold, but easily tarnishes.

Roberts-Austen has found with a Le Chatelier pyrometer that the alloy $AuAl_2$, containing 22 per cent. of aluminium, melts at 1065° C. to 1070° C., or 25° to 30° above gold itself. Small amounts of aluminium, however, lower the melting point, 0.47 per cent., giving the alloy Au_{100} Al, almost effacing the melting point of the gold, making it pasty, the mass only becoming really solid at 900° C. Up to 1 per cent. of aluminium the melting point is lowered, over this it begins to rise.

Roberts-Austen also made a curious experiment, showing the great heat of combination of gold and aluminium. Thirty grammes of gold was melted in a crucible, and kept at 1155° C. A piece of cold aluminium weighing 0.3 gramme was put in and rapidly stirred. At first the temperature fell to 1045°, then rose briskly to 1380°, which was 225° above the initial temperature of the gold.

It is possible to calulate roughly the heat set free in this experiment. Assuming the specific heat of gold in the molten state to be 0.036, and of liquid aluminium 0.308, we have—

Heat absorbed by the gold				
30 × 225 × 0.036	=	243 gramme calories.		
Heat absorbed by the liquid aluminium				
0.3 × (1380—625) × 0.308	=	70	"	"
Heat to liquefy the aluminium				
0.3 × 258	=	77	"	"
	Total	390	"	"

This is equal to 1300 kilogramme calories per kilo of aluminium, a quantity equal to nearly 20 per cent. of the heat of oxidation of the aluminium, and suggests the query whether the evolution of heat may not have been largely due to the oxidation of the aluminium by oxygen dissolved in the molten gold. A careful analysis of the alloy after the experiment would have thrown light on this question.

Aluminium and Iron.

(See Chapter XVI.)

Aluminium and Lead.

Deville remarked that these two metals had so little tendency to combine that there may be recovered intact at the bottom of an ingot of aluminium any small pieces of lead which may accidentally have dropped into the metal. Later, however, Deville remarked that M. Peligot was able to cupel buttons of impure aluminium with lead, thereby purifying the metal, and thought that an alloy may exist in certain proportions at the temperature necessary for cupellation. It is well known that if aluminium and lead are melted down together and cooled they separate, the aluminium chilling first and floating on the fluid lead. Mierzinski remarks that this property would render it possible to use aluminium for de-silverizing bullion, if its price allowed.

I do not think that the separation is quite as absolute as is indicated above. On melting the two metals together, they separated, with a sharp line of demarkation, so that there appeared to be no combination; but the lead was hardly as blue

as at first, and contained about ½ per cent. of aluminium, while the aluminium had visibly deteriorated, was darker, more crystalline, heavier, and contained at least 5 per cent. of lead, a test for which could easily be had before the blowpipe on charcoal. A small percentage of lead appears to be very harmful to aluminium.

Lejeal melted together lead and aluminium and allowed them to cool slowly. There was almost complete separation of the two metals, and analysis showed—

	Upper part of ingot.	Lower part of ingot.
Lead	9.78 per cent.	94.49 per cent.
Aluminium	90.22 "	5.51 "

If antimony is present, however, the lead can take up more aluminium.

I. H. Johannes,* of Washington, has patented an alloy composed of 15 parts of aluminium to 85 parts of lead and antimony combined, but for what purpose he finds it suitable is not stated, it is probably for type metal.

C. B. Miller† patents an anti-friction alloy of lead 320 parts; antimony, 64; tin, 24; aluminium, 2.

T. MacKellar‡ patents a type metal consisting of lead 65 parts; antimony, 20; tin, 3.3; copper, 3.3; aluminium, 3.3.

Heycock and Nêville state that a small quantity of aluminium does not cause a fall in the melting point of lead, which would show that no alloy is formed.

Aluminium and Magnesium.

Wöhler § fused these two metals together in the proportions represented by Al_2Mg, forming an alloy with 69.2 per cent. of aluminium. The product was a tin-white mass, very brittle, igniting at a red heat and burning with a white flame similar to

* U. S. Patent 443,943; Dec. 30, 1890.

† U. S. Patent, 456,898; July 28, 1891.

‡ U. S. Patent, 463,427: Nov. 11, 1891.

§ Ann. der Chemie und Pharm. 138, p. 253.

magnesium alone. The alloy in the proportions Mg_2Al, containing 36 per cent. of aluminium was malleable, but completely destroyed by leaving in water for a day, without any evolution of hydrogen. Both these mixtures appear to contain a compound of definite composition, for when treated with a solution of sal-ammoniac they disengaged hydrogen abundantly and deposited a brilliant, tin-white metallic powder. The solution contained magnesium chloride, while the residue was rich in aluminium and appeared to produce some aluminate of magnesium, which clouded the solution. The metallic residue was washed with water, again treated with sal-ammoniac solution and then with solution of caustic soda until it no longer evolved hydrogen. This residue was about one-third the total alloy, and was insoluble in both the above reagents. It burned with brilliant sparks when thrown into a flame.

Aluminium and Manganese.

Michel * (a pupil of Wöhler) obtained an alloy of these metals by melting together—

Anhydrous manganous chloride	2 parts
Potassium and sodium chlorides	6 "
Aluminium	3 "

On treating the regulus with hydrochloric acid the excess of aluminium was removed, leaving a dark-gray crystalline powder. This was unattacked by concentrated sulphuric acid in the cold, but dissolved on warming. Dilute caustic soda dissolved out the aluminium, leaving a residue of manganese. Its specific gravity was 3.4, and analysis showed it to correspond to the formula $MnAl_3$, containing 60 per cent. of aluminium.

Mr. A. H. Cowles manufactured an alloy for electrical purposes, consisting of manganese 18 parts, aluminium 1.2, silicon 5, zinc 13, copper 67.5. It was said to have a tensile strength of 35,000 pounds, with 20 per cent. elongation, and as its elec-

* Ann. der Chem. und Pharm, 115, 102.

trical resistance was greater than German-silver, it was especially recommended for rheostats.

The same inventor also patented the addition of manganese to commercial aluminium up to five per cent. for hardening and strengthening purposes.

Aluminium and Mercury.

It is not easy to understand why Deville said in his treatise, "Mercury is not able to unite with aluminium. Experiments of this nature which I have made myself, and which Mr. Wallaston has confirmed, proved it most clearly." Several years ago, before reading anything about the failure of mercury to unite with aluminium, I remember on taking a clean, bright piece of aluminium foil, putting on it a small globule of murcury and rubbing in hard with the finger, I felt the foil become hot and a white powder appeared immediately. On rubbing still more a hole was eaten through the foil. I concluded at once that the mercury amalgamated the aluminium and that the latter when distributed through the amalgam was in such a fine state of division that the air readily oxidized it, forming the white powder. In looking up the literature on the subject the following information has been collected:—

Cailletet* stated that aluminium could be amalgamated by the action of ammonium or sodium amalgam in the presence of water; also when the aluminium is connected with the negative pole of a voltaic battery and dipped into mercury overlaid with acidulated water, or into a solution of mercuric nitrate. Tissier confirmed the latter method, adding that if the aluminium foil used is not very thick it becomes amalgamated throughout and very brittle. Tissier also found that aluminium may be made to unite with mercury merely by the intervention of a solution of caustic potash or soda, without the intervention of a battery. If the surface of the metal be well cleaned, or moistened with the alkaline solution, it is immediately melted by the mercury, and a shining amalgam forms on its surface.

* Comptes Rendus, **49**, 56.

Joule* states that if a solution of an aluminium salt is electrolyzed, using mercury as the negative pole, it will form an amalgam with the aluminium set free. Since the amalgam decomposes water, setting free hydrogen, it is probable that all the aluminium deposited would be promptly oxidized.

Gmelin† states that potassium amalgam introduced into a hole bored into a crystal of alum immediately acquires a rotary motion, which lasts sometimes half an hour. At the same time, it takes up a considerable quantity of aluminium and becomes more viscid.

It is first stated in Watts' Dictionary (vol. viii.), that "aluminium oxidizes when its surface is simply rubbed with a piece of soft leather impregnated with mercury; the rubbed surface becomes warm in a few seconds, whitish excrescences appear consisting of pure alumina." In Watts' Supplement I., the best method of preparing the amalgam for use is stated to be by heating the two metals together in a gas which does not act on either of them. The operation is performed by placing a piece of aluminium foil at the bottom of a thick-walled test-tube, and pouring well-dried mercury on it, the tube having been previously drawn out at the middle to prevent the foil rising to the surface. The air is then expelled by a stream of carbonic acid gas and the tube is heated, without interrupting the current of gas, till the metal is all dissolved.

J. B. Baille ‡ and C. Fèry made a study of the production of aluminium amalgam, using the method just described; their results were as follows: "If aluminium foil is placed in a tube with mercury, it oxidizes very rapidly, becoming heated, while the mercury loses quickly its ordinary fluidity and becomes covered with a layer of alumina. By constructing thin glass tubes and filling them with known weights of aluminium and mercury, in an atmosphere of carbonic acid gas, heating the tubes on a sand bath, we verified these facts:—

* Chemical Gazette, 1850, p. 339.

† Gmelin's Hand Book, vi. 3.

‡ Ann. de Chim. et de Phys., 1889, p. 246.

"*a*. The amalgamation proceeds more rapidly the higher the temperature; at the boiling point of mercury the solution is very active.

"*b*. The vapor of mercury does not attack aluminium; only liquid mercury attacks it.

"*c*. The weight of aluminium dissolved is proportional to the weight of mercury used, and reaches a certain maximum after a given time.

"On cooling the bath of mercury obtained, it became evident that the amalgam consisted of a definite compound of aluminium and mercury dissolved in excess of mercury, for, on cooling, a crystalline paste separates out, floating on the bath. This paste was strained out, put in a covered crucible and heated in a current of hydrogen gas. The mercury distilled, leaving arborescent crystals of aluminium. We thus determined the composition of this compound to be, in 3.181 grammes,

Mercury	2.902 grammes	=	91.26 per cent.
Aluminium	0.279 "	=	8.74 "

"Its formula is probably Al_2Hg_3, which would require 8.26 per cent. of aluminium."

These investigators further noticed that if a leaf of aluminium has been once attacked by mercury and afterwards exposed to the air, it cannot be again attacked, since the layer of alumina produced adheres so closely as to protect it perfectly. In order to attack it again it is necessary to drive off all the mercury by heat and remove the alumina by acid. A leaf may be completely dissolved in a current of mercury.

Properties of aluminium amalgam.—The aluminium in its amalgam is very easily acted upon; indeed, it behaves like a metal of the alkaline earths. If let stand exposed to the air it covers itself immediately with gelatinous, opalescent excrescences of pure hydrated alumina, exhibiting both in their form and growth considerable resemblance to the so-called Pharaoh's serpents. This hydrated alumina is perfectly soluble in acids and alkalies. However, the coating protects the portion un-

derneath to some extent, so that it takes a long time, say 24 hours, for the mercury to free itself completely of aluminium. If the mercury containing aluminium is heated and agitated in air, more or less anhydrous alumina is formed, colored reddish from a little mercuric oxide, but all the aluminium is speedily oxidized. Water is decomposed by it at ordinary temperatures, hydrogen being liberated.

Acids attack the amalgam, dissolving the aluminium, even nitric acid (which does not attack aluminium *en masse*) dissolving out the aluminium completely. Caustic potash acts similarly, forming potassium aluminate.

Baille and Féry determined also that if antimony amalgam is mixed with aluminium amalgam, small crystals of antimony form immediately on the surface; later, the aluminium oxidizes and a bath of mercury remains free from both metals. Lead amalgam produces a similar effect, except that some lead remains with the mercury. It is interestiug to note that this is quite similar to the action of lead on a molten alloy of aluminium and tin, the aluminium being driven out of combination.

Krauchkoll * states that if aluminium and iron together are connected with the negative pole of a battery and dipped into mercury covered with acidulated water, an amalgam of both iron and aluminium is obtained, which oxidizes more slowly in the air than aluminium amalgam.

Helbig finds that when metallic aluminium is moistened with a solution of mercuric chloride, the white, hair-like formations characteristic of the oxidation of the amalgam are quickly formed. Even the dry salt will act similarly.

Aluminium and Molybdenum.

Molybdic acetate was dissolved in hydrofluoric acid, the solution evaporated to dryness, and the residue mixed with cryolite, flux and aluminium, in the same proportions as given for tungsten. Excess of aluminium was dissolved from the

* Journal de Physique, III., 139.

product with caustic soda, and there remained a black, crystalline powder consisting of iron-gray rhombic prisms, soluble in hot nitric or hydrochloric acid, and containing only aluminium and molybdenum in proportions corresponding to the formula Al^4Mo. (Wöhler).

Aluminium and Nickel.

Tissier: "An alloy with 50 per cent. of nickel was made by melting together the metals in equal proportions under sodium chloride; the heat evolved was sufficient to raise the mass to incandescence. This alloy remains pasty at the temperature of melting copper. It is so brittle that it pulverizes under the hammer. By melting proper proportions of this alloy with more aluminium, an alloy with 25 per cent. nickel was produced. This is less fusible than aluminium, and as brittle as the 50 per cent. alloy. By melting some 25 per cent. nickel alloy with aluminium, a 5 per cent. nickel alloy was obtained. This is much less brittle than the preceding, but is still very far from being easy to work. From the 5 per cent. alloy one with 3 per cent. was made. With this amount of nickel the aluminium acquired much hardness and rigidity, and was easy to work. A curious fact with this alloy is that it may be melted on a plate of aluminium, showing its fusing point to be less than that of pure aluminium, the reverse effect to what iron produces, which if present in the same proportion would diminish the fusibility of the aluminium. To sum up, the action of nickel on aluminium is much analogous to that of iron, for nickel, like iron, produces crystalline alloys with aluminium, but if employed with care it gives to it certain desirable qualities, such as hardness, elasticity, etc."

Michel* melted together aluminium with nickel chloride, and obtained an alloy with nearly 25 per cent. of nickel, which was tin-white, crystalline, specific gravity 3.65, but too brittle to be of any practical use.

* Ann. der Chem. und Pharm., 115, 102.

Lejeal states that an alloy he prepared containing 4.5 per cent. of nickel had a coarsely-crystalline fracture, was easily worked, rolled well, but gave poor mechanical tests, as follows:

	Tensile Strength.		Elongation.
	Kilos per mm.^{2}	Lbs per in.^{2}	Per Cent.
Forged cold and annealed	14.7	21,000	6.0
" at low red heat	16.0	22,800	5.5
" " weak cherry red	16.3	23,000	11.5

The Pittsburgh Reduction Company have recently commenced selling aluminium hardened by a small per centage of nickel, made by adding nickel oxide directly to the bath in which alumina is being electrolyzed. They claim for these alloys a tensile strength in castings of 25,000 to 30,000 pounds per square inch and in rolled bars or plates of 45,000 to 50,000 pounds. A bar of this metal shown to the writer was certainly very strong and possessed of great elasticity, suggesting its probable use for light wagon or carriage springs.

These nickel alloys, however, do not resist corrosion as well as some of the other light alloys.

Aluminium has been used in small amount in casting metallic nickel, as it reduces the nickel oxide and allows the metal to melt easier.

An alloy of nickel 40 parts; aluminium, 30; tin, 20, and silver 10, has been named "roseine" and is recommended for jewelry.

Aluminium-Nickel-Copper Alloys.

The following alloy has a beautiful white color and takes a high polish. It resembles some of the finer grades of German silver:—

Copper	70 parts.
Nickel	23 "
Aluminium	7 "

A similar alloy, but somewhat harder, is called Minargent. It contains

Copper	100 parts	= 56.5	per cent.
Nickel	70 "	= 39.5	"
Antimony	5 "	= 2.8	"
Aluminium	2 "	= 1.2	"

To make this alloy, the directions are first to melt together the copper, nickel and antimony, and then granulate the resulting alloy in water. The dried granules are mixed with the aluminium and with 1.5 per cent. of a flux consisting of 2 parts borax and 1 part fluorspar, and then remelted.

F. H. Sauvage states that the following alloy resembles pure silver. He gives it the name Neogen:—

Copper	58	parts.
Zinc	27	"
Nickel	12	"
Tin	2	"
Bismuth	½	"
Aluminium	½	"

P. Baudrin claims that the following alloy resembles silver very closely in color, malleability, ring, and even specific gravity:—

Copper	75	parts.
Nickel	16	"
Zinc	2¼	"
Tin	2¾	"
Cobalt	2	"
Iron	1½	"
Aluminium	½	"

Mr. Jas. Webster has patented the composition of several bronzes containing nickel. Prof. Kirkaldy's tests on these alloys, made by the "Webster Crown Metal Company," now the "Aluminium Company, Limited," gave results from 82,000 to over 100,000 lbs. per square inch with 20 to 30 per cent. elongation.

a)* Copper is melted and aluminium added to it until a ten per cent. bronze is made. There is then added to it 1 to 6 per cent. of an alloy, ready prepared, containing

* German Patent, 11,577.

Copper	20 parts.
Nickel	20 "
Tin	30 "
Aluminium	7 "

The alloy thus prepared would contain, as represented by the two extremes,

	I.	II.
Copper	89.3	86.4 per cent.
Nickel	0.3	1.4 "
Tin	0.4	2.0 "
Aluminium	10.0	10.2 "

b)* The two following alloys are prepared in the usual way, under a flux consisting of equal parts of potassium and sodium chlorides, and are cast into bars:

I.		II.	
Aluminium	15 parts.	Nickel	17 parts.
Tin	85 "	Copper	17 "
		Tin	66 "
	100 "		100 "

To make the bronzes, equal parts of these two alloys are melted with copper; the more of the alloys used the harder and better the bronze. The best mixture is of

Copper	84 parts.
Alloy I	8 "
" II.	8 "
	100 "

The copper is first melted, then the alloys put in together and stirred well. As iron is harmful to this bronze, the stirrer must be of wood or clay. This alloy is suitable for art castings, kitchen utensils, etc., or anywhere where durability, hardness, malleability, polish and very slight oxidizability are required. A cheaper and more common alloy may be made of

Copper	91 parts.
Alloy I	4 "
" II.	5 "

* German Patent, 28,117.

These two bronzes would contain centesimally

	Rich alloy.	Poorer alloy.
Copper	85.36	94.58
Tin	12.08	6.70
Nickel	1.36	3.85
Aluminium	1.20	0.60

c) * The following alloy is said to withstand oxidation well, to have great tenacity, durability, capability to bear vibrations, and to take a high polish. A preliminary alloy is made of

Copper	200 parts.
Tin	80 "
Bismuth	10 "
Aluminium	10 "

The alloy proper is formed by melting together

Preliminary alloy	4½ parts.
Copper	164 "
Nickel	70 "
Zinc	61½ "

The final composition would be by calculation

Copper	55.67
Nickel	23.33
Zinc	20.50
Tin	0.40
Bismuth	0.05
Aluminium	0.05
	100.00

It will be noticed that this alloy contains the same ingredients as Baudrin's alloy, though not in exactly the same proportions, the principal change being that it contains more nickel and less aluminium.

d) † Another alloy patented by Mr. Webster contains

* English Patent, 8320, June 23, 1886.

† United States Patent, 377,918, Feb. 14, 1888.

Copper	53	parts	= 51.0	per cent.
Nickel	22½	"	= 21.6	"
Zinc	22	"	= 21.2	"
Tin	5	"	= 4.8	"
Bismuth	¾	"	= 0.7	"
Aluminium	¾	"	= 0.7	"
			100.0	

"Lechesne" is an alloy not very different from some already mentioned, said to be invented by M. Thirion, but the English patent being taken out by the Société Anonyme La Ferro-Nickel, of Paris. The patent mentions two alloys, containing

	I.		II.	
Copper	900	parts.	600	parts.
Nickel	100	"	400	"
Aluminium	1¾	"	½	"

Which would give in per cents:—

	I.	II.
Copper	89.84	59.97
Nickel	9.98	39.98
Aluminium	0.18	0.05
	100.00	100.00

The first of these alloys is the one to which the name "Lechesne" appears to be given. In a description of the manufacture of this alloy a French magazine states that the nickel is first put into a crucible and melted, the copper stirred in gradually, then the heat raised and the aluminium added. The alloy is heated almost to boiling and cast very hot. It is claimed that this alloy is equal to the finest German silver, being very malleable, homogeneous, strong and ductile, and stands hammering, chasing, punching, etc., perfectly.

The proportion of aluminium in these bronzes last described is so small that it appears probable that its chief function must be as a deoxidizing agent, since a very small amount of oxygen dissolved in the bath would quickly combine with all the aluminium added. In any event, very little can be left over, apparently too little to be able to account for all the improvement made in the alloy.

Cowles Bros. have manufactured some of these bronzes, and have appropriated the name "Aluminium Silver" to the alloy made by adding aluminium to German silver, or to their alloy of aluminium, nickel, and copper called "Hercules Metal." Two of their alloys were made of—

	I.	II.
5 per cent. aluminium bronze	1	2
Nickel	2	1

containing respectively—

	I.	II.
Copper	31.67	63.33
Nickel	66.67	33.33
Aluminium	1.67	3.33

These alloys, on being tested, gave tensile strengths of 79,163 and 118,000 lbs. per square inch respectively, the first showing 33 per cent. elongation. They claim that an alloy of the proportions of II. will show an average strength of over 90,000 lbs. per square inch, but with very little elongation, and will take an edge in a manner that makes it quite suitable for table-knives.

G. F. Andrews* states that the following alloys are all very hard, fine grained, and show great strength.

	Aluminium.	Nickel.	Copper.
(1)	6¼	21¼	72½
(2)	10	24	66
(3)	12	33	55

(2) has the color of ten carat gold and takes a fine polish; (3) has a beautiful golden-brown color; (1) is similar, but richer and deeper. These alloys may become very useful for decorative purposes.

Aluminium and Phosphorus.

Wöhler found that finely-divided aluminium, heated in phosphorus vapors, burns and forms a dark-gray metallic mass,

*Jour. Am. Chemical Society, July, 1894, p. 486.

smelling strongly of phosphoretted hydrogen; it also evolves this gas copiously when placed in water.

Shaw's phosphor-aluminium bronze is described in Chap. XV.

Aluminium and Platinum.

Aluminium alloys readily with platinum, forming alloys more or less fusible according to the proportion of aluminium. Tissier Bros. state that an alloy with 5 per cent. of platinum approaches in color gold containing 5 per cent. of silver, but is not malleable enough to be worked. Debray says that a small quantity of platinum (no definite amount named) can be tolerated in aluminium without the malleability being destroyed.

Aluminium and Silicon.

Deville: "Any siliceous material whatever, put in contact with aluminium at a high temperature, is always decomposed; and if the metal is in excess there is formed an alloy or a combination of silicon and aluminium in which the two bodies may be united in almost any proportions. Glass, clay, and the earth of crucibles act in this way. However, aluminium may be melted in glassware or earthen crucibles without the least contamination of the metal if there is no contact between the metal and the material; the aluminium will not wet the crucible if put into it alone. But, the moment that any flux whatever facilitates immediate contact (even sodium chloride does this) the reaction begins to take place, and the metal obtained is always more or less siliceous. It is for this reason that I have prescribed in melting aluminium not to add any kind of flux, even when the flux would not be attacked by the metal. Among the fusible materials which facilitate the melting of aluminium, it is necessary to remark of the fluorides that they attack the siliceous materials of the crucible, dissolving them with great energy, and then the siliceous materials thus brought into solution are decomposed by the aluminium with quite remarkable facility. Aluminium charged with silicon presents quite different qualities according to the proportion of the alloy. When

the aluminium is in large excess, there is obtained what I have called the 'cast' state of aluminium, by means of which I discovered crystallized silicon in 1854. This 'cast' aluminium, gray and brittle, contains according to my analysis 10.3 per cent. of silicon and traces of iron. When siliceous aluminium is attacked by hydrochloric acid, the hydrogen which it disengages has an infected odor, which I formerly attributed to the presence of a hydrocarbon, but which we now know is due to hydrogen silicide, SiH_4, thanks to the experiments of MM. Wöhler and Buff. It is by the production of this gas that may be explained the iron smell which is given out by aluminium more or less contaminated with silicon. But aluminium may absorb much larger proportions of silicon, for, on treating fluosilicate of potash with aluminium, M. Wöhler obtained a material still metallic containing about 70 per cent. of silicon, sometimes occurring as easily separable crystals. Since I had the occasion in a work which I published on silicon to examine a large number of these combinations, I found that they were much more alterable than pure aluminium or silicon, without doubt because of the affinity which exists between silica and alumina. I have, therefore, dwelt on and tried to explain the importance of this point in obtaining perfectly pure aluminium."

A small amount of silicon does not appear to be very injurious to the malleability of aluminium, which bears it much as iron and copper do, but over 1 or 2 per cent. commences to change its color, make it harder and, especially, crystalline, so that its malleability is rapidly impaired. The silicon, however, may be present up to even 5 per cent. without preventing the use of the metal for castings and articles not to be worked.

Minet has proven that aluminium may contain even 8 per cent. of silicon and yet be quite strong, if the amount of iron present is small; but if the iron increases over 1 per cent., the metal becomes worthless.

The double role of silicon in aluminium, as combined and graphitoidal, was first pointed out by Rammelsberg (see p. 56),

and is now being noted in the analyses of the metal. It does not appear that chilling the metal has any influence in changing one kind into the other, and no fixed rule has yet been observed as to the relative amounts of each kind existing in the metal.

Aluminium and Selenium.

Wöhler* stated that if selenium and aluminium are mixed intimately and heated together, they unite with a flame, leaving a black, pulverulent, metallic powder, which smells strongly of silicuretted hydrogen and evolves that gas violently when dropped into water. The liquor is colored red from precipitated selenium.

Aluminium and Silver.

These alloys are easily made by direct fusion together of the two metals. All the alloys containing up to 50 per cent. of silver are more fusible than pure aluminium. In general, the introduction of a few per cent. of silver into aluminium benefits it considerably, increasing its hardness, capability of polish, making it whiter, denser and stronger. It has already been remarked that aluminium will absorb almost 5 per cent. of silver without increasing in volume. A great advantage gained by this small amount of silver is also the increased facility of casting, the metal filling the moulds better and shrinking less; this alloy also rolls, draws, and works under the hammer like pure aluminium, requiring, however, more power to work it. Deville states that the alloy containing 3 per cent. of silver is unattacked by sulphuretted hydrogen, but Mierzinski states that every alloy of aluminium and silver is blackened more quickly than pure silver. I think the latter remark untenable, since the alloys with 3 to 5 per cent. of silver are noted for keeping their color like pure aluminium in places where silver would be immediately tarnished. With over 10 per cent. of silver, Mierzinski's remark may be true. M. Christophle made statuettes of

* Pogg. Ann., 1827, ii, 160.

the alloy with 3 per cent. of silver, which kept their beautiful white color permanently,

With 5 per cent. of silver, aluminium becomes elastic and as hard as coin silver with 10 per cent. of copper, but is still as malleable as pure aluminium. It has a specific gravity of 2.8, casts better than aluminium, shrinks less, and can be rolled or drawn perfectly, but requires more power than pure aluminium. It has been used for dessert-spoons, knife-blades, and even for watch-springs. This is the alloy which has often been proposed as a substitute for coin silver, since it contains no such poisonous metal as copper, and the color is not appreciably different from that of pure silver. The beams of fine balances when made of aluminium contain from 3 to 5 per cent. of silver. The alloy with 3 per cent. of silver and 2 per cent. of copper, strongly compressed cold, is also recommended.

The alloy containing 10 per cent. of silver is much harder than the foregoing. It casts well, and can be rolled at a particular heat, but it does not work well under the hammer. Dr. Carroll, manufacturer of dental plates, uses an alloy for casting these articles * composed of—

Aluminium	90 to 93 parts.
Silver	5 to 9 "
Copper	1 "

This alloy, when cast under slight pressure, gives perfect castings, is very white and easy to work. The addition of copper is said to decrease to a minimum the shrinkage of the alloy, also giving it a closer grain.

The alloys containing from 10 to 50 per cent. of silver are all brittle and cannot be worked under the hammer. Debray states that the 50 per cent. alloy is as hard as bronze. "Tiers Argent" is an alloy of two-thirds aluminium and one-third silver. It is chiefly made in Paris; its advantages over silver are that it is cheaper, harder, and can be stamped and engraved with greater ease than the alloys of silver and copper. Some

* U. S. Patent 373,221, Nov. 15, 1887.

difficulty was met, at first, in getting the alloy homogeneous; but this has been overcome, and spoons, forks, salvers and articles generally made of silver are now made of this metal with an appearance equal to that of any other silver alloy. Tissier Bros. stated that the alloy with 33 per cent. of silver (the same as "Tiers Argent") is fusible enough to be used as a solder for aluminium, but they found difficulty in running it out, and also found that it made a brittle joint.

Hirzel* made alloys of aluminium and silver in atomic proportions, containing from 6 to 20 per cent. of aluminium. He found the alloy AlAg, containing 20 per cent., to be silver-white, very porous, tarnishing in the air, with a specific gravity of 6.73; the alloy $AlAg_2$, containing 11.11 per cent., to be also silver-white, less porous, also tarnishing in the air, specific gravity 8.744; and the alloy $AlAg_4$, containing 5.9 per cent., to be pure silver-white, very malleable and forgeable, tarnishing in the air and with a specific gravity of 9.376.

Aluminium and Sodium.

Deville states that aluminium unites easily with small proportions of sodium; with 1 to 2 per cent. it decomposes water in the cold. It follows from this that the properties of the metal made carelessly by using sodium are completely altered. The last traces of sodium can be removed only with great trouble, especially when the aluminium has been produced in presence of fluoride, because of the marked affinity of aluminium for fluorine at the temperature at which aluminium fluoride, AlF_3, commences to volatilize.

Aluminium and Tellurium.

Wöhler states that when heated together in powder, these elements combine very violently, leaving a black, brittle, metallic mass, smelling strongly of tellurretted hydrogen and evolving that gas actively when put into water. The water becomes first red, then brown, and finally opaque, from precipitated tel-

* Bayerisches Kunst und Gewerb-Blatt, 1858, p. 451.

lurium. Put on paper, a piece of this alloy forms a brown, metallic ring around it. Wöhler noted that it decomposed water even more energetically than aluminium sulphide.

Aluminium and Tin.

These two metals unite readily, small amounts of either metal changing the properties of the other quite materially.

A small amount of tin renders aluminium brittle. Tissier Bros. made an alloy with 3 per cent. of tin, melting the metals under sodium chloride, then remelting once without any flux. This alloy was a little more fusible than aluminium, but very brittle; the grain was very fine and crossed, but the bar broke at the first blow. Deville stated that these alloys with a small proportion of tin may be used as solders for aluminium, but they answer only imperfectly.

M. Bourbouze* has recommended the use of an aluminium-tin alloy for the interior parts, especially, of optical instruments, in place of brass. The alloy formed of 100 aluminium to 10 of tin, or 9 per cent. of tin, is recommended as being the best for this purpose. It is white and has a specific gravity of 2.85, only slightly above that of aluminium itself. It may therefore be used in place of aluminium where great lightness is desired, and it is further superior to aluminium itself in resisting alteration better, being more easy to work, and finally it can be soldered without any special apparatus, as easily as brass, particularily if the solder recommended by M. Bourbouze (p. 463) is used. If the alloy does work as well as represented by Bourbouze, there must be a very sudden change in the properties of aluminium alloys between the 3 per cent. tin alloy described by Tissier Bros. and this 9 per cent. alloy; but from analogy with other aluminium alloys we admit that this is not impossible. Having so many advantages over aluminium it should replace it for many purposes, especially in instruments of a portable character; it would, besides, be somewhat cheaper

* Comptes Rendus, cii., p. 1317.

than pure aluminium. An analysis of some of this metal exhibited at the Paris Exposition of 1889 gave

Aluminium	85.74 per cent.
Tin	12.94 "
Silicon	1.32 "
Iron	none.

A test by Minet of a similar alloy, containing tin 10 per cent. aluminium 88, silicon 1:30, iron 0.65, gave a tensile strength in casting of 9.8 kilos per square m. m. (14000 pounds per sq. in.) with an elongation of only 4.11 per cent. It thus appears that this alloy is in reality not quite so strong as aluminium itself.

At the other end of the scale we have alloys containing only a few per cent. of aluminium. Aluminium gives to tin greater hardness and tenacity if it is not present in too large an amount. The alloy with 3 per cent. of aluminium is harder than tin and less acted on by acids; 5 per cent. of aluminium gives a much stronger and more elastic metal. The alloy with 7 per cent. of aluminium is especially recommended as being easy to work, being malleable at a red heat, and capable of a good polish, but possessing the drawback that it cannot be melted without a part of the tin separating from the aluminium. Tissier Bros. state that tin will not combine with more than 7 per cent. of aluminium, for they state that the alloy with 10 per cent. is not homogeneous, and on cooling in a mould arranges itself in two layers, an upper brittle one, a little more fusible than aluminium, and a lower one containing nearly all the tin, but rendered harder and less fusible than pure tin by a small quantity of aluminium. I have not been able to notice this liquation. Mr. Joseph Richards prepared an alloy with 10 per cent. of aluminium, which was whiter and much stronger than tin and kept its color perfectly in the air. It had a specific gravity of 6.45 (calculated value 6.28) and melted only imperfectly at a temperature slightly above that of tin. It was quite malleable, but became hard by rolling. On heating a piece of

this, in the form of sheet, at a gradually increasing temperature, small globules sprouted out in all directions, but they were identical in composition with the bulk of the alloy, so that no separation had taken place. The surface of the sheet appeared harder than the interior, and did not melt so easily, but this property seemed to result from other causes than difference in composition. After standing several months a peculiar internal change took place in this metal by which it lost all its malleability and became as rotten as baked clay, and annealing could not restore its strength.

The same disintegration has been noticed with even smaller proportions of aluminium. A metal company in Philadelphia, which makes tin foil, tried the experiment of adding less than 1 per cent. of aluminium to their metal. It rolled beautifully and had a fine color, but in a few hours it became brittle, and in a few days it had all fallen to powder.

Heycock and Neville have noticed that very small amounts of aluminium *lower* the melting point of tin, a minimum freezing point of 3 degrees lower than tin itself being obtained with 0.48 per cent. of aluminium. Very careful experiments showed this lowering to be, within the limit of 0.25 per cent. aluminium, at the rate of 1.3° fall per 1 atom weight of aluminium dissolved in 100 atom weights of tin.

The alloy with 19 per cent. of aluminium is said to be malleable and workable at a red heat, though not so much so as the 7 per cent. alloy. The alloys with over 30 per cent. of aluminium are described as silver-white, porous and brittle.

Minet found the alloy of 50 tin, 48.9 aluminium, 0.72 silicon and 0.36 per cent. iron to be malleable, but when forged it had a tensile strength of only 10 kilos per sq. m. m. (15,000 lbs. per sq. in.) with practically no elongation.

The melting points of a number of these alloys have been determined by Minet as follows, making the alloys with commercial aluminium containing 1.50 per cent. silicon and 0.76 per cent. iron, whose melting point was 619° C.:—

Commercial aluminium.	Tin.	Fusing point.
100	0	619° C.
92	8	595°
80	20	575°
70	30	535°
60	40	575°
50	50	570°
20	80	530°
10	90	490°
0	100	233°

Two points are worthy of particular attention in this table. First, that 10 per cent. of aluminium serves to raise the melting point over 250°, or 60 per cent. of the total difference between the melting points of the two metals. Second, the sudden drop at 30 per cent. tin, which looks almost as if a mis-print had been made. The alloy $Al_{10}Sn$ would correspond to 30.4 per cent of tin. By a peculiar co-incidence, there will be noted in the melting points of aluminium-copper alloys a similar sudden fall at 20 per cent. of copper, and oddly enough, the alloy $Al_{10}Cu$ calls for 19 per cent.

Aluminium and Titanium.

Wöhler* obtained an alloy by melting together—

Titanic oxide	2 parts.
Cryolite	6 "
Potassium and sodium chlorides	6 "
Aluminium	1 "

The excess of aluminium being dissolved out of the mass by caustic soda, bright, steel-colored crystals remained, containing aluminium, titanium, and a little iron and silicon from the aluminium used. The specific gravity was 3.3; the alloy was infusible before the blowpipe, but on ignition in chlorine gas burnt, forming chlorides of all the metals present. Its composition seemed to vary, for another experiment at a lower temperature gave an alloy richer in silicon, with a specific gravity of 2.7. On heating these alloys in the air they first become yellow, then steel-blue, and after that oxidize no further.

*Ann. der Chem. und Pharm., 113, 248.

Michel, proceeding in a similar way, obtained an alloy whose analysis denoted the formula Al_3Ti, containing about 62 per cent. of aluminium.

L. Levy* describes an alloy which he obtained by similar processes, as being in crystalline plates, insoluble in water, alcohol, or ether, steel-gray in color, brittle, and conducting heat and electricity. Specific gravity 3.11: composition on analysis—

Aluminium	70.92
Titanium	26.80
Silicon	2.17

In 1891, the Pittsburgh Reduction Company began to manufacture alloys of aluminium with 0.5 to 2 per cent. of titanium by a process analagous to Wöhler's. Cryolite is melted in a carbon-lined crucible, and titanic oxide dissolved in it. After thorough solution, aluminium is introduced, solid or liquid, and the heat continued. The titanic oxide which has been added will be completely reduced to titanium, which alloys with the aluminium, and the per cent. of titanium in the alloy is regulated by the weight of aluminium added. These alloys are harder than aluminium, and when rolled have a degree of elasticity comparable to spring brass, with a tensile strength of 30,000 to 40,000 pounds per sq. inch. If chromic oxide is added to the bath as well, a triple alloy of aluminium, titanium and chromium is obtained which is very hard and rigid. The titanium alloys alone will bear a cutting edge about as well as soft steel, and have been already used for potato and fruit knives.

Lejeal made an alloy with 7 per cent. of titanium, and calls attention to its peculiar fracture, which is traversed by sharp lines like the top of a butcher's block.

The following mechanical tests were made in Le Verrier's laboratory:

* Comptes Rendus, 106, 66, (1888).

Titanium. Per cent.	Tensile Strength. Kilos per sq.m.m.	Pounds per sq. in.	Elongation Per cent.
2.92 (rolled poorly)	19	27,000	2.5
2.20 (rolled well)	24	34,000	5.0
1.70 (rolled well)	20	28,000	1.5
" (annealed)	15	21,000	16.5

These results agree with the experience of the Pittsburgh Company, who have found 2 per cent. to be about the strongest alloy. While these alloys are very strong, yet they are not of as fine color as pure aluminium, being somewhat leady in appearance, and they do not solder so easily. Still, for purposes where great strength and elasticity combined with lightness are the prime requisite, and looks are a secondary consideration, the 2 per cent. alloy can be highly recommended.

Aluminium and Tungsten.

Michel fused together—

Tungstic acid	3 parts.
Cryolite	6 "
Potassium and sodium chlorides	6 "
Aluminium	3 "

at a strong red heat. The fusion was afterwards treated with hydrochloric acid, leaving an iron-gray, crystalline, brittle powder, single crystals being several millimetres long. Hot caustic soda extracted from them all their aluminium, leaving pure tungsten. Their specific gravity was 5.58, and the composition corresponded to the formula Al_4W, containing 37 per cent. of aluminium.

Mannesmann recommends the addition of small quantities of tungsten for improving the resistance of aluminium to corrosion. He also claims greatly increased strength.

Tests made in Le Verrier's laboratory show properties similar to the titanium alloys. The following are the properties of the alloy with 7.5 per cent. of tungsten:

	Tensile Strength. Kilos per sq. m.m.	Pounds per sq. in.	Elongation. per cent.
Cast	15.5	22,000	1.5
Rolled hard	25.0	35,000	4.0
Annealed	18.0	25,000	10.0
"	15.9	22,000	14.0

Aluminium and Zinc.

Aluminium unites readily with zinc, the alloys being in general harder and more fusible than aluminium. Some of the first attempts to solder aluminium were with these alloys, containing 6, 8, 12, 15, and 20 per cent. of aluminium. They answered better than any other solders which had been tried, but unfortunately, when melted they are thick and run with difficulty, so much so that it is necessary to spread them over the joint as a plumber does when he wipes the joints of lead pipes. Joints thus made stand hammer blows or rough usage very poorly.

The alloy containing 10 per cent. of aluminium is brittle, has the appearance of zinc, is more fusible than aluminium and less so than zinc. The alloy with 25 per cent. of aluminium has a fine, even grain, and is of about the same fusibility as the preceding. The alloy AlZn, containing 29.5 per cent. of aluminium, forms a silver-white, very brittle, crystalline alloy, with a specific gravity of 4.53. It was noticed that in the preparation, when the two metals were fused together in this proportion under a layer of sodium and potassium chlorides, they united with incandescence. The 50 per cent. alloy is white, crystalline, brittle, and does not appear to be homogeneous, for the Tissier's report that when heated on an aluminium plate it separated into a fusible portion which ran off, and a less fusible part which did not melt until the plate did.

When zinc is in small proportion in aluminium it makes it brittle, unless below a very few per cent. in quantity. The alloy containing 3 per cent. of zinc is described by Debray as harder than aluminium, very brilliant, but still quite malleable. Some of the aluminium first made by Deville contained zinc, the presence of which he accounted for as follows: "The retorts used for making the aluminium were made at the Vielle Montagne Zinc Works, and having in their mixture some ground-up old zinc retorts, the new retorts contained zinc, which passed into the aluminium and altered its properties in a very evident manner. Some analyses of this metal having been

made in England, some asserted that French aluminium was only an alloy to which zinc gave a fusibility which might be wanting in pure aluminium.

The addition of both zinc and copper to aluminium makes a very stiff metal in castings. Alloys with five per cent. copper and 15 per cent. of zinc, also 3 per cent. copper and as high as 27 per cent. of zinc have been used very successfully in castings where great rigidity was desired. If such castings are made under pressure they are still stronger.

Aluminium has found considerable use in the zinc industry. Mr. Joseph Richards, of the Delaware Metal Refinery, Philadelphia, has patented * the addition of a very small amount of aluminium to the galvanizing bath. An alloy is prepared containing 2 per cent. of aluminium, and it is recommended to add 1 pound of this alloy to each ton of zinc in the bath. The effect is to make the zinc more fluid, a given weight coating 20 per cent. more surface, and the sheets produced being brighter and keeping their color better. The bath also oxidizes less, and so produces less skimmings, although, as the metal is rendered more fluid, the per centage of "dross bottoms" (*i. e.* impurities settling out of the zinc) is increased. As the amount of aluminium added is only 0.001 per cent., the cause of its marked effects seems difficult to explain. It has seemed to the writer that it acts chemically on dissolved oxygen or dissolved oxide of zinc in the bath, which substances have a strong tendency to render the metal thick or mushy. By completely eliminating the last trace of these ingredients, the aluminium gives the bath its maximum fluidity. The beneficial effects, in fact, are so well established that almost every galvanizer in the United States is already using Mr. Richards' process.

Similar advantages are gained by using a small percentage of aluminium in the zinc used in desilverizing (Parke's process). Here zinc is stirred into silver-lead, and kept at a low red-heat for several hours, and the addition to it of aluminium gives it much greater resistance to oxidation. With 1 per cent of alu-

* U. S. Patent, March, 1891.

minium the zinc will remain clear and white, even at a red heat. The improvement can be noted with even 0.1 per cent. Instead of repeatedly adding zinc to the lead in several kettles, the whole of the silver may be removed from the lead in one operation. A German patent of Rössler * recommends using as high as 0.5 per cent. of aluminium. The scums are removed on cooling the bath, and are almost entirely free from oxide, thus allowing them to be liquated easily with very little loss, and giving a rich zinc-silver alloy almost entirely free from lead or oxides. The small amount of aluminium used is almost entirely oxidized out during the process; but if the scums are burnt to zinc oxide, what aluminium is left passes as alumina into the zinc oxide.

Aluminium-Zinc-Copper Alloys.

These alloys are generally known as "aluminium brasses," and are about as much superior to ordinary brass as aluminium bronze is to ordinary bronze. They are made in two general ways; either by introducing metallic aluminium into melted brass, or by introducing zinc into melted aluminium bronze. The latter method is pursued by the Cowles Smelting Company, because they produce the bronze directly, while the makers of pure aluminium claim that the first method is superior, because by adding aluminium to melted brass the dissolved cuprous oxide and zinc oxide are removed, producing a dense metal, casting without pores, while the aluminium already combined with copper does not have this effect. It appears, however, that the Cowles brasses are equal in strength, elongation, and casting qualities to those made with pure aluminium. Repeated remeltings of aluminium brass are not advisable, since, like all brasses, it changes in composition on melting, though not to so large a degree. After mixing, it need be remelted only once in a clean crucible. Aluminium brasses flow well, give sharp, sound castings, are more ductile, malleable, and have greatly increased strength and power to resist cor-

* No. 64,416, 1892.

rosion. The working qualities are said to be governed largely by the percentage of zinc present, an increase of which makes the brass harder, but does not injure its malleability.

Numerous tests have been made of the strength and elongation under stress, of aluminium brasses. Even 1 per cent. of aluminium is found of benefit, while the strength increases with the amount of aluminium.

As early as 1863, Julius Baur, of New York, obtained a patent* for alloys containing—

Copper	14–16 parts.
Zinc	10 "
Aluminium	0.1–3 "

which he stated were of great hardness, toughness and durability. This alloy differs from the aluminium brasses now made only in containing about half as much again of zinc. The next year, M. G. Farmer, of Salem, Mass., patented† an alloy containing—

Copper	65–80 parts.
White metals	35–10 "
Aluminium	0.3–10 "

Cowles Bros. report the following series of tests made, in 1886, at their works in Lockport, their alloys all being made by adding zinc to aluminium bronze:

Composition.			Tensile strength per sq. inch (castings).	Elongation, per cent.
Aluminium.	Oopper.	Zinc.		
5.8	67.4	26.8	95,712	1.0
3.3	63.3	33.3	85,867	7.6
3.0	67.0	30.0	67,341	12.5
1.5	77.5	21.0	32,356	41.7
1.5	71.0	27.5	41,952	27.0
1.25	70.0	28.0	35,059	25.0
2.5	70.0	27.5	40,982	28.0
1.0	57.0	42.0	68,218	2.0
1.15	55.8	43.0	69,520	4.0

* U. S. Patent, 40388, Oct. 1863.

† U. S. Patent, 44086, Ang., 1864.

When it is remembered that ordinary brass rarely has a tensile strength over 30,000 lbs., with elongation about 10 per cent., the benefit of the aluminium can be easily realized. Government tests of this company's brasses, to determine their suitability for steamship propellers, were made on the alloy composed of 1 part 10 per cent. bronze, 1 part copper and 1 part zinc, containing therefore—

Aluminium	3.3 per cent.
Copper	63.3 "
Zinc	33.3 "

The test pieces were 22 inches long, 1 ⅞ inches diameter, and 10 inches between elongation marks. The results showed a tensile strength of 70,000 to 82,500 lbs., elastic limit 55,000 to 65,000 lbs., and elongation 1.6 to 2.5 per cent.; having, therefore, a tensile strength three times and elastic limit four times as great as the best Government bronzes.

The Aluminium und Magnesium Fabrik, of Bremen, state the strength of aluminium brass according to their tests to be—

2 aluminium, 23 zinc, 75 copper	41,000 lbs.
2 " 30 " 68 "	49,530 "
2½ " 30 " 67½ "	65,400 "

Prof. Tetmayer, of Zurich, has tested the strength of aluminium brasses with the following results:—

Content of aluminium.	Strength. Kilos per sq. mm.	Strength. Lbs. per sq. in.	Elongation, per cent.
4 per cent.	69	98,100	6½
3 "	60	85,300	7½
2½ "	52	73,900	20
2 "	48	68,250	30
1½ "	45	64,000	39
1 "	40	56,900	50

The amount of zinc in these brasses is not stated, but was probably 25 to 30 per cent.

In general, then, we may conclude that even a fraction of 1 per cent. of aluminium added to brass will increase very re-

markably its strength and ductility, while about 5 per cent. will make an alloy, having brought its tensile strength close up to 100,000 lbs. per square inch. This indicates that as far as strength alone is concerned the cost of aluminium brass castings is less than aluminium bronze castings of the same strength, for they contain less aluminium and a quantity of the cheap metal zinc. The principal disadvantage of the brass compared with the bronze is, that it cannot be remelted without changing its quality, by reason of its containing zinc.

A remarkable property of the aluminium brasses, however, is their capability of forging at a red heat; even 0.5 per cent. added to ordinary brass imparting to it this quality.

A very strong and, at the same time, cheap alloy is that known as "Richards' Bronze," the invention of Mr. Joseph Richards of Philadelphia. It contains copper 55 parts, zinc 42 or 43, iron 1, aluminium 1 to 2. This alloy is of a golden-yellow color, is exceedingly fine-grained, and has a tensile strength in castings of 50,000 pounds per square inch with 15 per cent. elongation. Like all the strong bronzes, however, it requires some experience in handling before the ordinary metal-worker can turn out uniformly castings with these maximum properties. The worked metal averages 50 per cent. stronger.

CHAPTER XV.

ALUMINIUM-COPPER ALLOYS.

THESE two metals unite readily in many proportions, the union being attended with evolution of heat, which in some cases is very large in amount. As has been noticed with regard to the alloys of other metals with aluminium, so here we note that the useful alloys of these two metals are in two groups, 1st—those in which a small percentage of copper imparts certain advantageous properties to aluminium; 2d—those in which a limited quantity of aluminium enhances the useful properties of copper. The latter is by far the class of most importance industrially.

General Properties.

The color of aluminium-copper alloys is white until the percentage of copper exceeds 80 per cent. or until its bulk becomes equal to that of the aluminium with which it is alloyed. Above this amount of copper, the color becomes first slightly violet and then yellowish, until with 90 per cent. the alloy is a light golden yellow; at 92.5 per cent. the color is greenish-gold; at 95 per cent. the full color of 18 carat gold alloyed with silver; at 97.5 per cent. the color of 18 carat gold alloyed with copper; above that amount, the color of red brass.

Le Verrier has made a study of the melting points of the aluminium-copper alloys by means of the Le Châtelier pyrometer, and has published the following results for alloys of commercial aluminium:

Composition.				
Aluminium.	Silicon.	Iron.	Copper.	Melting Point (C°).
100.00				625
97.75	1.50	0.75	0	619
90.00	1.40	0.70	8	587
89.00	1.35	0.68	10	578
83.00	1.28	0.64	15	573
78.20	1.20	0.60	20	528
73.30	1.13	0.56	25	553
65.50	1.00	0.50	33	527
58.70	0.90	0.45	40	535
48.90	0.75	0.38	50	553
36.70	0.56	0.28	62.5	545
29.30	0.45	0.23	70	692
22.00	0.34	0.17	77.5	694
19.60	0.30	0.15	80	947
12.20	0.19	0.09	87.5	974
9.80	0.15	0.07	90	1029
7.30	0.11	0.05	92.5	1000
4.90	0.08	0.04	95	1030
			100	1054

If these melting points are carefully examined, several peculiarities are noticed, indicating chemical alloying. The natural compounds of aluminium and copper are those with the formulæ $AlCu_3$ and Al_2Cu_3, containing respectively 12.4 per cent and 22 per cent. of aluminium. Both these alloys are well marked. The first melts completely without liquation and crystallizes in prisms, while all the alloys with a smaller proportion of aluminium have a serrated fracture. The fall of the melting point at 7.5 per cent. of aluminium indicates combination at this point, and its formula, $AlCu_5$, may be understood as $AlCu_3$ *plus* Cu_2, indicating that it is a chemical combination of the 12.4 per cent. alloy with a definite amount of copper. Its behavior on cooling supports this view, by showing indications of free copper in passing the melting point of copper. It is also interesting to note, that if we consider the specific gravities of the two metals, the alloy $AlCu_3$ consists of a combination of one volume of aluminium to two volumes of copper, truly a very simple relation.

The alloy Al_2Cu_3 is also very sharply defined. It contains

22 per cent. of aluminium, but its melting point, 994°, is 250° lower than that of the alloy with 20 per cent. That a difference of only 2 per cent. in composition should make this extreme change in fusibility is very curious. This alloy, moreover, consists by volume of equal parts of aluminium and copper, and it is at this point that the yellow color of the lower alloys fades out entirely, and the alloy is white.

Another sharp fall in the melting point at 37.5 per cent. of aluminium indicates the alloy Al_3Cu_2, in which the proportions of the two metals combined by volume is 2 aluminium to 1 of copper. Its melting point is 545° C., or 80° below that of aluminium alone; a fact which is very remarkable considering that the alloy contains over half of its weight of copper.

From this point until the percentage of aluminium is over 80, the melting point remains between 500° C. and 550°, with possibly definite alloys at Al_5Cu (68 per cent.) and $Al_{10}Cu$ (81 per cent). What the true constitution of these alloys is must be left to conjecture. They are probably definite compounds of Al_2Cu_3 with fixed quantities of aluminium; or, as we might put it, Al_2Cu_3 dissolved in a certain excess of aluminium.

From 85 per cent. of aluminium, the melting point rises; from 90 per cent. upwards at a nearly uniform rate of 4° for each per cent. increase. We therefore note the singular fact, that the addition of copper to aluminium, in amounts up to 10 per cent., *lowers* the melting point of the latter about 4° for every per cent. of copper present.

The study of the specific gravities of these alloys would be most interesting, but, unfortunately, the data are largely wanting.

Alloys of the First Class.

A small percentage of copper hardens aluminium, but does not take away its malleability. I have observed that a very small amount, less than 0.1 per cent., closes the grain of commercial aluminium, making it look more compact, and for that reason whiter, on a fractured surface. This small amount makes the aluminium perceptibly harder. It has been ob-

served that by adding a small amount of copper to aluminium much better castings are obtained and with greater ease than with pure aluminium. The reason is probably that the copper is mostly absorbed into the aluminium, so that it shrinks less in cooling and casts more solidly. Christofle, of Paris, exhibited at the London Exhibition in 1862, statuettes of a beautful silver-white color made of aluminium with 1 per cent of copper. Deville states that the addition of 2 or 3 per cent. of copper was found useful in making large art-castings, and that the alloy produced worked very well under the chisel and burin. The metal reduced by Deville in copper boats (see p. 255) contained from 5 to over 6 per cent. of copper, yet it could be worked easily. This malleability is retained until the copper exceeds 10 per cent., above which quantity brittleness sets in. Cowles Bros. report the alloy with 16.8 per cent. of copper as having a specific gravity of 3.23, tensile strength 29,370 lbs. per square inch, but elongation almost nothing, the alloy being too brittle for any practical use. Alloys containing from 30 to 40 per cent. of copper are very brittle, and hard as glass and beautifully crystalline.

The alloys with small percentages of copper have recently been in great favor with constructors of aluminium apparatus, boats, etc. The works at Froges, France, makes regularly a 6 per cent. alloy which rolls well, and has the following mechanical properties:

	Tensile Strength..		Elongation.
Treatment.	Kilos per sq. m. m.	Pounds per sq. in.	Per cent.
Rolled hard	25	35,000	3.5
Annealed	18	25,000	15.5

Captain Julien made experiments with these alloys at the Aerostatic Park at Meudon, and gives the following properties of sheet 1 millimetre thick cut in strips 5 millimetres wide:

	Observed.	Calculated.	Tensile Strength.	
Per cent. of Copper.	Specific gravity.	Specific gravity.	Kilos per sq. m. m.	Pounds per sq. in
0	2.67	2.67	18.7	26,500
2	2.71	2.71	30.7	43,500
4	2.77	2.75	31.1	44,000
6	2.82	2.79	38.6	55,000
8	2.84	2.83	39.5	56,000

These light alloys do not resist corrosion as well as pure aluminium, but they cast well and are very suitable for many purposes where lightness and strength together are wished.

The alloy with 2 to 3 per cent. of German-silver, first described by the writer, may be also commended as being of a fine white color, strong, and quite elastic. When rolled hard, its tensile strength exceeds 40,000 pounds, with an elongation of 3 to 5 per cent., while in casting its strength is 22,000 pounds, or 50 per cent. stronger than aluminium. The fine color and elasticity of this alloy commend it for many purposes where pure aluminium is too soft and non-elastic.

Alloys of the Second Class.

Aluminium is more efficient than any other metal in improving the qualities of copper. Under this second head we shall consider these alloys made by adding to copper any quantity of aluminium up to the limit within which the alloys are of practical value. This limit has been definitely established at about 11 per cent.; and the alloys here included are generally known as "the aluminium bronzes," being particularized as 1 per cent. bronze, 5 per cent. bronze, etc.; but on account of its general superiority over all the rest, the alloy with about 10 per cent. of aluminium has received the title of "aluminium bronze"—without any qualifications. This distinction has come into general use, and it will be well to keep it in mind in going over the succeeding pages, for, whenever the expression "the aluminium bronze" or "aluminium-bronze" occurs without the percentage of aluminium being specified, the 10 per cent. alloy is signified.

The late Dr. Percy seems to have been the first to call attention to these beautiful alloys, but I am unable to find any account given by him beyond the statement that "a small proportion of aluminium increases the hardness of copper, does not injure its malleability, makes it susceptible of a beautiful polish, and varies its color from red-gold to pale-yellow." This statement must have been made prior to 1856. In that year, Tissier Bros. brought aluminium bronze to the notice of the

French Academy,* and a week later a paper by Debray,† hurriedly put together, made known the results obtained up to that time by Messrs. Rousseau, Morin and himself at La Glacière.

Aluminium bronze went through the same experience that aluminium itself and all its other alloys underwent during the first decade after its discovery. It was unduly praised, too much claimed for it, and so, while its wonderful properties did sustain for a season all the exaggerations heaped upon it, yet some unprejudiced observers soon made known the true state of the case, and determined its proper place among the alloys; but, as even the high place finally accorded it was far below the first expectations, we have seen the alloy become the subject of unmerited fault-finding. If some people expect too much of the alloy, and are therefore disappointed, let them blame themselves, or, perhaps, those who led them to expect so much, and not the metal.

The history of the application of aluminium bronze is summed up in the oft-repeated expression "it would come into extensive use in the arts if its price would permit." Since, until recently, it was made by melting directly together the copper and aluminium, its price was naturally dependent upon that of the latter metal, and by reference to the price of that metal in different years, it is an easy matter to figure out what one-tenth of a kilo or pound of aluminium would cost to make a kilo or pound of bronze. In 1864, Morin, of Paris, quoted the aluminium bronzes at the following prices:—

10	per cent.	aluminium	15	francs	per kilo	($1.36	per lb.).
7½	"	"	.....12½	"	"	($1.14	").
5	"	"	10	"	"	($0.91	").

During the years from 1860 to 1883 the price of aluminium remained almost constant, its use was not extended, and its

* Comptes Rendus, 43, 885 (Nov. 3, 1856).

† Comptes Rendus, 43, 925 (Nov. 10, 1856).

bronze shared the same apathy. In 1879, the Société Anonyme de l'Aluminium quoted—

10 per cent. aluminium bronze..... 18 francs per kilo ($1.64 per lb.)

which does not show much improvement on the price of fifteen years before. And so the bronze was kept out of almost every possible industrial application until 1885, when the application by Cowles Bros. of the electric furnace to the reduction of alumina in presence of copper brought the question of aluminium bronze nearer to a practical solution than it had ever been before. They sold the alloy at the start on the basis of $3.50 per pound for the contained aluminium, which brought the price down to—

10 per cent. aluminium bronze.....$0.50 per lb.

For several years, the Cowles Company and the owners of the Hèroult process sold large amounts of aluminium bronze on the basis of $2.50 per pound for the contained aluminium, and in 1890 on the basis of $1.50 per pound, which made the price of 10 per cent. bronze $0.30. However, when the price of commercial aluminium dropped below $1.00 per pound, and especially since it has reached $0.50, the bronze can be made from the pure metals, in any grade desired, so cheaply and accurately, that the sale for ready-made bronzes has well-nigh vanished. Users of the bronzes prefer to do their own mixing, and make the alloys according to their own formulæ. With copper worth $0.10 per pound, and aluminium $0.50, the metals in 10 per cent. bronze cost only $0.14; and if the cost of making is added, the total cost in ingots is not over $0.16 per pound. At such prices, there is no margin of profit left to the makers of bronzes by the alloy processes. This reversal of industrial conditions since 1890 has been a prominent feature of the aluminium industry.

Constitution of the bronzes.—The question whether the aluminium bronzes are chemical combinations of the two metals composing them has long been argued *pro* and *con*. It is

acknowledged that the bronzes containing about 2½, 5, 7½ and a little less than 10 per cent. aluminium behave most like true alloys, or chemical combinations in which the identity of the constituents is sunk completely in that of the compound. There is a coincidence to notice here, which would be remarkable if it had no significance. The alloys represented by the following formulas would contain respectively—

Cu_4Al	9.61	per cent.	aluminium.
Cu_8Al	5.05	"	"
$Cu_{16}Al$	2.59	"	"
Cu_5Al	7.84	"	"

With regard to these bronzes, Morin* advances the following arguments to prove that they are true chemical combinations according to the formulas given:—

1. The alloy made by melting 10 parts of aluminium with 90 parts of copper is a very brittle mixture, which only takes on its best properties after two or three repeated fusions, during which the excess of aluminium above that called for by the formula is oxidized and separated out. When this point has been reached, further meltings do not alter the properties any more.

2. The addition of 5, 7½ and 10 per cent. of aluminium gives perfectly homogeneous alloys, but if 6, 7 or 8 per cent. is added, only metallic mixtures result, in which can be distinguished uncombined aluminium. A point worthy of remark is that the color of the 5 and 10 per cent. bronzes is similar to gold, the latter giving a brighter shade; but the 7½ per cent. bronze is of a greenish cast, and has an entirely different appearance from the other two.

3. When 10 per cent. of aluminium is added to molten copper, the large amount of heat absorbed by the aluminium cools the copper so much that almost all of it becomes solid. However, as the whole becomes warmer, and the chilled part is

* Genie Industriel, 1864, p. 167.

stirred in that remaining melted, the mass gradually warms up as the copper combines with the aluminium, until towards the end the crucible is raised to a white heat by the heat set free within it. This phenomenon can only be explained on the basis of chemical action and combination between the two metals.

4. If a piece of aluminium bronze is heated nearly to its melting point and hammered at that temperature, it splits into fragments showing peculiar cleavage planes. These particles are evidently crystalline, and are smaller the nearer the temperature has been brought to the melting point. If they are analyzed it will be found that they are all identical in composition with the mass, and that therefore no liquation or separation of any kind has taken place. If the bronze were a mere mixture, the temperature to which these pieces were heated would have caused the more easily fusible aluminium to sweat out.

Almost all the arguments advanced to prove that the aluminium bronzes are true alloys are along these four lines discussed by Morin. A German pamphlet describes the 2½, 5 and 10 per cent. bronzes as not being mixtures, like the alloys of copper and zinc, but perfect combinations of absolute homogeneity and uniform density, and not altered by remelting. When, however, it is known that 1 per cent. or less of aluminium has a considerable influence on copper, it is almost begging the question to claim all the improvement to be due to the formation of some alloy in atomic proportion something like $Cu_{40}Al$. It is certain that the first effect of adding the aluminium, and in the case of very small proportions the whole effect, is that the aluminium acts as a deoxidizing agent, somewhat similar to the action of phosphorus in phosphorizing bronze. It reduces all dissolved oxides, combines with any occluded gases, and protects the copper from oxidization during cooling. Thus a fraction of a per cent. of aluminium is of considerable benefit to brass and bronze, adding just before pouring. I have in mind the statement of an English metallurgist who reported that on adding 1 per cent. of aluminium to a not very pure copper he

was unable to find any aluminium on analyzing the resulting metal, but its properties were a great improvement on those of the original metal. In this case the aluminium was entirely slagged off. On adding the same quantity to pure copper it is certain that a larger part of the aluminium remains in the copper, as is shown by its color, but part of the improvement is undoubtedly due to the elimination of gases and traces of impurities.

It is on the strength of these facts that some makers of pure aluminium have advanced the argument (directed against those makers producing bronzes directly) that the aluminium forms valuable bronzes *principally* by its action on the foreign substances in the copper, and that therefore a really valuable aluminium bronze can only be made by introducing pure aluminium into copper; that it is wholly wrong practice to reduce an aluminium bronze of high percentage to one of low percentage by adding fresh copper, since, although the bronze used may be of first quality, yet the already combined aluminium cannot produce any effect on the copper added, and the resulting bronze will be of inferior quality. The weak point in this argument is the last statement, that "the already combined aluminium cannot produce any effect on the copper added." We know that the aluminium and copper had previously combined with evolution of much heat, but there is reason to suppose that if subsequently a substance were brought into contact with this bronze which could be decomposed by aluminium with the evolution of much more heat than was set free in the formation of the bronze, the second reaction would take place. For instance, the reaction

$$Al_2 + 3Cu_2O = Al_2O_3 + 3Cu_2$$

is very strongly exothermic, to the amount of something like 270,000 calories, and it is in a high degree probable that the heat of combination of this amount of aluminium with 9 times its weight of copper is not more than a small fraction of this amount. Therefore, the reaction

$$2Cu_4Al + 3Cu_2O_3 = Al_2O_3 + 7Cu_2$$

which differs from the former one in involving the decomposition of the bronze, Cu_4Al, is still largely exothermic and therefore liable to occur. To sum up, even considering that the heat developed in the formation of the copper-aluminium alloy is very large, say even 3 or 4 times that of mercury combining with potassium, the largest so far measured experimentally, yet it would be so small in comparison with the heat developed by the reaction of the aluminium on the impurities present as to theoretically have very little effect in retarding that reaction. I would therefore conclude that the already combined aluminium would be very slightly less powerful than free aluminium in reducing and eliminating impurities in the copper, and the practical effects would be identical.

Further, it is clear that when a considerable percentage of aluminium occurs in the bronze, only a part of its beneficial effect is due to the removal of impurities, a considerable effect being necessarily produced by the presence of the aluminium in the bronze. Therefore, even if the argument advanced as to the combined aluminium not being able to remove impurities were true, yet this can only be part of the function of the aluminium, and if the aluminium is really present, the results will be identical in the two cases as far as the influence of the continued presence of the aluminium is concerned.

Therefore, it may be safely concluded, that if the bronzes are made with copper of the same purity, the one made by diluting a good quality high-priced bronze with copper will be practically as good as the one made directly from the metals. If it is true that the bronze placed on the market by those following the former method is not so good as that made from the metals directly, the reason is that the high per cent. bronze is not pure, due to the manner of its production. This is a defect inherent in the first production of the alloy, and not chargeable to the subsequent inability of the aluminium to perform its function during dilution.

The company producing bronzes by direct reduction have been understood to claim that since their alloy is made by cop-

per or copper vapor absorbing aluminium vapor, the result is a bronze far more homogeneous than is produced by melting the two metals together. This is partially true, since the metals in the latter case may not be kept molten long enough for complete combination to take place, and therefore would lack homogeneity to a certain degree if not carefully made. This opportunity for carelessness to enter into the question and affect the result does not occur in the reduction process, and the latter bronze would for this reason be at an advantage. But if the alloy is made carefully and with the precautions dictated by experience in melting the metals together, there is no reason why the bronzes should differ. Two specimens containing nothing but aluminium and copper in like proportions will be identical, no matter how they are produced.

Looking at the industrial side of the question, it is safe to say that users of bronze generally prefer to buy the constituent metals and make their own mixtures in whatever proportions their experience shows to be best for the kind of work they execute. Other things being equal, I think a bronze worker would prefer to purchase the metals, rather than buy the bronze ready-made, as in the former case he can always be sure of the composition of his alloy, and can profit by all those little variations in the manipulations and in the proportions of metals used which experience suggests, and which form so valuable a part of the successful metal-worker's art.

Preparing the bronzes.—In making aluminium-copper alloys great attention must be paid to the quality of the copper used. Ordinary commercial copper may contain small amounts of antimony, arsenic, or iron, which the aluminium can in no way remove, and which affect very injuriously the quality of the bronze. The aluminium bronzes seem to be extremely sensitive to the above metals, particularly to iron. This necessitates the employment of the very purest copper; electrolytic is sometimes used when not too high priced, but Lake Superior is generally found satisfactory enough. Even the purest copper may contain dissolved cuprous oxide or occluded gases,

and it is one of the functions of the aluminium to reduce these oxides and gases, forming slag which rises to the surface and leaving the bronze free from their influences. If tin occurs in the copper, it lowers very greatly the ductility and strength of the bronzes, but zinc is not so harmful.

Care should also be taken as to the purity of the aluminium used, though its impurities are not so harmful as they would be if occurring in similar percentage in the copper, since so much more copper than aluminium is used in these alloys. Yet, the bronzes are so sensitive to the presence of iron that an aluminium with as small a percentage of this metal as possible should be used. The silicon in commercial aluminium is not so harmful as the iron, but it does harden the bronze considerably and increases its tensile strength. The purest aluminium alloyed with the purest copper always produces the highest quality of bronze.

The "Magnesium und Aluminium Fabrik," of Hemelingen, gives the following directions for preparing the bronzes: "Melt the copper in a plumbago crucible and heat it somewhat hotter than its melting point. When quite fluid and the surface clean, sticks of aluminium of a suitable size are taken in tongs and pushed down under the surface, thus protecting the aluminium from oxidizing. The first effect is necessarily to chill the copper more or less in contact with the aluminium; but if the copper was at a good heat to start with, the chilled part is speedily dissolved and the aluminium attacked. The chemical action of the aluminium is then shown by a rise in temperature which may even reach a white heat; considerable commotion may take place at first, but this gradually subsides. When the required amount of aluminium has been introduced, the bronze is let alone for a few minutes and then well stirred, taking care not to rub or scrape the sides of the crucible. By the stirring, the slag, which commenced to rise even during the alloying, is brought almost entirely to the surface. The crucible is then taken out of the furnace, the slag removed from the surface with a skimmer, the melt again stirred to bring up what little

slag may still remain in it, and is then ready for casting. It is very injurious to leave it longer in the fire than is absolutely necessary; also, any flux is unnecessary, the bronze needing only to be covered with charcoal powder. The particular point to be attended to in melting these bronzes is to handle as quickly as possible when once melted."

As with ordinary brass and bronze, two or three remeltings are needed before the combination of the metals appears to be perfect and the bronze takes on its best qualities. When the alloy is thus made perfect, the bronze is not altered by remelting, and the aluminium, which in the first instance removed the dissolved oxides and occluded gases from the copper, now prevents the copper from taking them up again and so keeps the bronze up to quality. If, however, the bronze is kept melted a long time, and subject to oxidizing influences, the tendency of the copper to absorb oxygen will cause some loss of aluminium by the action of the latter in removing the oxygen taken up, and a slag consisting principally of alumina will result; but if the remelting of the bronze is done quickly and the surface covered with charcoal or coke, the loss from this cause will be very trifling, and the percentage of aluminium will remain practically constant.

We have already discussed at length the dilution of a high per cent. bronze to a lower one. This operation is practised on a large scale by the companies which produce aluminium bronze directly in their reduction furnaces. I understand that they simply melt the high per cent. bronze in a crucible and stir into it pure copper in the required proportions, or else melt the two down together on the hearth of a reverberatory furnace. The combined aluminium thus cleanses the added copper and produces a lower bronze of right quality if the high-per cent. bronze used is pure and the copper added of the proper quality. It is, of course, quite certain that no difficulty can occur in adding aluminium to a low-per cent. bronze to increase its percentage, other than that of imperfect combination, which may be overcome by one or two remeltings.

Fusibility.—The bronzes all melt easier than copper. Le-Verrier gives the following determinations with the Le Chatelier pyrometer:

Aluminium.	Copper.	Melting point.
0	100	1054° C.
5	95	1030°
7.5	92.5	1000°
10.	90.	1029°

These alloys all become slightly pasty below the melting point of copper until they have become thoroughly alloyed, showing that if not carefully prepared they contain free copper. When re-melted, this disappears, and the combination may be regarded as perfect.

Casting.—Aluminium bronze is not an easy metal to cast perfectly until the moulder is familiar with its peculiarities. The great enemies of steel castings, dissolved oxides and gases, forming blowholes, are here absent. As we have seen, the aluminium removes these impurities from the original copper, and by its presence afterwards keeps the bronze free from them. This difficulty, therefore, is not met in casting aluminium bronze, but the obstacles which afford the most trouble are the shrinkage in setting and contraction in cooling. These two factors are extraordinarily large, and must be met by provisions made in moulding, as shown later.

A plumbago crucible, or one lined with magnesite (see p. 444), is the best to use for melting the bronze, the melt being kept covered with powdered charcoal. I would recommend that the stirrers and skimmers used be coated with a wash made of plumbago and a little fire-clay, as the contact of bronze with bare iron tools cannot but injure its quality. The crucible should not be kept in the fire any longer than is absolutely required to bring the bronze to proper heat for casting. In casting, it is of considerable advantage to use a casting ladle, into which the bronze is poured, which is arranged so as to tap from the bottom. This effectually keeps any slag or scum from being entangled in the casting. The same result is also obtained

by arranging a large basin on top of the pouring gate, which is temporarily closed by an iron or clay stopper. Enough bronze is then poured into this basin to fill the mould, and after the dirt is all well up to the surface the plug is withdrawn and the mould fills with clean metal. For very small work the ordinary skim-gate will answer the above purpose; for large castings the tapping ladle is preferred. Plain castings, such as pump-rods, shafting, etc., and especially billets for rolling and drawing, are cast advantageously in iron moulds, which should be provided with a large sinking-head on top to feed the casting as it cools. Rubbing with a mixture of plumbago, kaolin and oil is said to protect the iron moulds from sticking. The chilling makes the bronze soft, and the slabs and cylinders thus cast for rolling and drawing are in good condition to be worked at once. For ordinary foundry castings, sand-moulds are used. The slower cooling makes the castings more or less hard; if soft castings are wanted they can be subsequently annealed.

Thomas D. West, the author of "American Foundry Practice," read a paper on "Casting Aluminium Bronze and other Strong Metals," before the American Society of Mechanical Engineers, November, 1886, from which we make the following extracts:

"The difficulties which beset the casting of aluminium bronze are in some respects similar to those which were encountered in perfecting methods for casting steel. There is much small work which can be successfully cast by methods used in the ordinary moulding of cast-iron, but in peculiarly proportioned and in large bronze castings other means and extra display of skill and judgment will be generally required. In strong metals there appears to be a "red shortness," or degree of temperature after it becomes solidified, at which it may be torn apart if it meets a very little resistance to its contraction, and the separation may be such as cannot be detected by the eye, but will be made known only when pressure is put upon the casting. To overcome this evil and to make allowances for sufficient freedom in contraction, much judgment will often be required,

and different modes must be adopted to suit varying conditions. One factor often met with is that of the incompressibility of cores or parts forming the interior portion of castings, while another is the resistance which flanges, etc., upon an exterior surface oppose to freedom of contraction of the mass. The core must generally be 'rotten' and of a yielding character. This is obtained by using rosin in coarse sand, and filling the core as full of cinders and large vent-holes as possible, and by not using any core rods of iron. The rosin would cause the core when heated to become soft, and would make it very nearly as compressible as a 'green-sand' core when the pressure of the contraction of the metal would come upon it.

"By means of dried rosin or green-sand cores we were able to meet almost any difficulties which might arise in ordinary work from the evils of contraction, so far as cores were concerned. For large cylinders or castings which might require large round cores which could be 'swept,' a hay-rope wound around a core barrel would often prove an excellent yielding backing, and allow freedom for contraction sufficient to insure no rents or invisible strain in the body of the casting. To provide means for freedom in the contraction of exterior portions of castings, which may be supposed to offer resistance sufficient to cause an injury, different methods will have to be employed in almost every new form of such patterns. It may be that conditions will permit the mould to be of a sufficiently yielding character, and again it may be necessary to dig away portions of the mould or loosen bolts, etc., as soon as the liquid metal is thought to have solidified. In any metal there may be invisible rents or strains left in a casting through tension when cooling, sufficient to make it fragile or crack of its own accord, and it is an element which from its very deceptive nature should command the closest attention of all interested in the manufacture of castings.

"Like contraction, the element of shrinkage is often found seriously to impede the attaining of perfect castings from strong metals. In steel castings much labor has to be ex-

pended in providing risers sufficient to 'feed solid' or prevent 'draw-holes' from being formed, and in casting aluminium bronze a similar necessity is found. The only way to insure against the evils of shrinkage in this metal was to have the 'risers' larger than the body or part of the castings which they were intended to 'feed.' The feeder or riser being the largest body, it will, of course, remain fluid longer than the casting, and, as in cast-iron, that part which solidifies first will draw from the nearest uppermost fluid body, and thus leave holes in the part which remains longest fluid. The above principle will be seen to be effective in obtaining the end sought. It is to be remembered that it is not practical to 'churn' this bronze, as is done with cast-iron. A long cast-iron roll, 1 foot in diameter, can by means of a feeder 5 inches in diameter and a ½ inch wrought-iron rod be made perfectly sound for its full length. To cast such a solid in bronze, the feeding head should be at least as large as the diamater of the roll, and the casting moulded about one-quarter longer than the length of roll desired. The extra length would contain the shrinkage hole, and when cut off a solid casting would be left. This is a plan often practised in the making of guns, etc., in cast-iron, and is done partly to insure against the inability of many moulders to feed solid, and to save that labor. A method which the writer found to work well in assisting to avoid shrinkage in ordinary castings in aluminium bronze was to 'gate' a mould so that it could be filled or poured as quickly as possible, and to have the metal as dull as it would flow to warrant a full run casting. By this plan very disproportionate castings were made without feeders on the heavier parts, and upon which draw or shrinkage holes would surely have appeared had the metal been poured hot.

"The metal works well in our ordinary moulding sands and 'peels' extra well. As a general thing, disproportionate castings weighing over 100 pounds are best made in 'dry' instead of 'green' sand moulds, as such will permit of cleaner work and a duller pouring of the metal, for in this method there is

not that dampness which is given off from a green-sand mould and which is so liable to cause 'cold shots.' When the position of the casting work will permit, many forms which are proportionate in thickness can be well made in green-sand by coating the surface of the moulds and gates with 'silver lead' or plumbago.

"From 'blow-holes,' which are another characteristic element likely to exist in strong metals, it can be said that aluminium bronze is free. Should any exist it is the fault of the moulder or his mould, as the metal itself runs in iron moulds as sound and close as gold. Sand moulds to procure good work must be well vented, and, if of 'dry-sand,' thoroughly open sand mixture should be used and well dried. The sand for 'green-sand' work is best fine, similar to what will work well for brass castings. For 'dry-sand' work the mixture should be as open in nature as possible, and, for blacking the mould, use the same mixtures as are found to work well with cast-iron."

In view of the above-recommended precautions, the reader recognizes at once the falsity of the statement in the pamphlet of a German manufacturer that "aluminium bronze shrinks almost none at all." I have, in fact, measured the contraction of a 5 per cent. bronze as ¼ inch to the foot, just twice that of cast-iron. Such wild statements at a time when aluminium bronze is coming into such extended use, can only bring discredit on the firm making them.

Color.—One per cent. of aluminium changes the color of copper considerably, making it like red brass. The influence of the aluminium is properly seen when two ingots, one of pure copper and the other of the bronze, are chilled from a high temperature, in which case the yellower color of the latter is plainly perceptible. If, however, the two ingots are let cool slowly in the air, the effect of the aluminium is more striking, since the copper oxidizes so as to turn quite black, while the bronze keeps as untarnished as if it had been chilled in water. Two and one-half per cent. of aluminium makes a bronze re-

sembling in color gold of low carat alloyed with copper. The five per cent. bronze is pure yellow and the nearest approach to the color of pure gold of any known metal or alloy. The seven and one-half per cent. bronze has the color of the jeweler's green gold. The ten per cent. bronze, or aluminium bronze proper, is a bright light-yellow, similar to the jeweler's pale gold. The eleven per cent. bronze is still paler. Fifteen per cent. makes a yellowish-white alloy which is too brittle to be of any practical use.

Specific gravity.—The aluminium bronzes are not as much lighter than copper as the percentage of aluminium would indicate. If the specific gravity of a mixture of copper and aluminium in the given proportions is calculated, it will be found uniformly lower than the observed specific gravities, showing the amount of contraction in alloying to be large. This will account for the denseness and very close grain of these bronzes. The following table will set forth these data more plainly:—

Per cent. of aluminium.	Specific gravity. Observed.	Specific gravity. Calculated.	Contraction in alloying (per cent.)
2½	8.60*	8.40	2.3
3	8.69	8.33	4.1
4	8.62	8.13	5.7
5	8.37	8.0	4.4
	8.20*	8.0	2.4
7½	8.00†	7.60	5.0
10	7.69	7.25	5.5
	7.56†	7.25	4.1
11	7.23†	7.10	1.8

Hardness.—Accurate observations of the hardness of the aluminium bronzes are wanting, with perhaps a single exception. It is known that the annealed metal, which has been chilled from a red heat, is much softer than that which has been allowed to cool very slowly. The metal which has been worked some time becomes almost as hard as steel. I think that the

* According to Saarburger.

† Cowles Bros.' alloys. The rest were given by Bell Bros.

pure aluminium bronzes, when softened, are yet harder than all ordinary bronzes.

The Cowles Company's bronzes almost invariably contain a small amount of silicon, which slightly increases the tensile strength, but is principally active in increasing the hardness of the bronze. For this reason, the following determinations, made on their alloys at the Washington Navy Yard, graded according to the government standard of hardness, must be considered as maximum figures:—

Metal.	Hardness.	Remarks.
Average of gun-steel forgings, oil-tempered and annealed.....	21.4	Elongation 20 per cent.
Same, not oil-tempered and annealed	14.9	" 18.7 "
11 per cent. aluminium bronze, cast in sand.....	20.0	Elongation 4.5 per cent.
Same, forged at low redness.....	18.0	" 5.2 "
Same, rolled at red heat.....	21.2	" 6.5 "
7½ per cent. aluminium bronze, rolled hot	16.9	Elongation 30.0 per cent.
Same, cast in chill moulds.....	13.4	" 32.1 "
	11.8	" 26.1 "
Government bronzes.....	3.3	Elongation 12.5 per cent.
	6.6	" 33.6 "

Transverse strength.—The transverse strength or rigidity of aluminium bronze is one of its most noticeable qualities. Strange measured the amount of deflection in bars of aluminium bronze, gun-bronze, and ordinary yellow brass, laid on horizontal supports with the weight in the centre. From these experiments he concluded that the aluminium alloy was three times as rigid as gun-bronze and forty-four times as much so as ordinary brass.

Compressive strength.—Mr. Anderson made a test of aluminium bronze for compressive strength in the Royal Gun Foundry at Woolwich. The piece taken had a height and diameter of 15 millimeters ($\frac{9}{16}$ inch). The results were as follows:

Strain Applied.		Shortening, per cent.	Permanent set, per cent.
Kilos per sq. mm.	Lbs. per sq. in.		
14.84	21,100	1.01	0.17
96.42	137,140	(Specimen crushed.)	

It is seen from this test that the elastic limit for compression is comparatively low, but that the metal gives very slowly, as is shown by the large interval between this point and the ultimate crushing strength.

According to two tests made at the Watertown Arsenal on Cowles' bronzes, their compressive strength was as follows:—

11 per cent. aluminium ..... 160,400 lbs per sq. inch.
10 " aluminium..... 153,600 " "

The test pieces being 2 inches long and ½ inch in diameter, and cast specimens. The shortening up to the crushing point was 15 and 23.7 per cent. respectively.

Tensile strength.—One of the first properties of the aluminium bronzes to draw attention to them was their great tensile strength. Since this property is attended by a large extensibility under strain, and a high elastic limit, we see that they are very valuable metals for engineering uses. For such uses, however, a metal costing $1.50 to $2 per lb. was almost entirely out of question, and it is only recently that the lower price has permitted placing the metal in situations where its great strength is of most use.

Taking the various determinations chronologically, we have, first, those made by Lechatelier, in 1858. The alloy was cast in cylinders 10 millimetres (0.37 inch) in diameter, length of test pieces not given. The results were as follows:—

Percentage of aluminium.	Strength.	
	Kilos per sq. m. m.	Lbs. per sq. in.
10.....	58.36	83,000
10.....	55.35	78,720
8.....	33.18	47,190
5.....	32.20	45,800
5.....	31.43	44,700
French wrought-iron.....	35.00	49,780

Deville determined the strength of aluminium bronze drawn into wire, compared with that of iron and steel wire of the same size (1 mm. diameter=No. 19 B. W. G.), as—

	Kilos per sq. m. m.	Lbs. per sq. in.
Aluminium bronze	85	120,900
Best iron	60	85,340
Steel	90 100	128,000 142,000

Experiments made in 1861,* on the relative strength of aluminium bronze and the common metals gave—

Aluminium bronze	19
Gun metal (copper 89, tin 11)	10
Drawn brass wire	8
Drawn copper wire	7
Tin bronze (copper 96, tin 4)	4
Same, with 1 per cent. aluminium	10
Same, with 2 " "	16

In 1862, Anderson tested the strength of aluminium bronze at the Woolwich Arsenal—testing pieces 3¼ inches long and 0.6 inch diameter, with the following results:—

	Lbs. per sq. in.
Aluminium bronze	73,185
Gun metal	35,000
Hardest steel	118,000
Medium cast-steel	82,850
Steel from a Krupp cannon	74,670

The Cowles bronzes have been tested officially at the Watertown Arsenal and at the Washington Navy Yard, with especial reference to their comparison with the government bronzes. The Cowles alloys contain small variable quantities of silicon and the following content of aluminium:—

Grade.	
Special "A"	11 per cent.
A	10 "
B	7½ "
C	5–5½ "
D	2½ "
E	1¼ "

* Chemical News, v, p. 318.

Three tests of the "Special A" grade, made on the Watertown testing machine, gave the following results:—

1. Cast in sand.....	Test pieces	2 inches	long,	0.2 sq.	inch area.
2. Forged hot (some flaws).	"	10	"	0.5	" "
3. Rolled hot.....	"	2	"	0.2	" "

	1.	2.	3.
Tensile strength (lbs. per sq. in,).	109,800	87,600	111,400
Elastic limit " " .	79,900	41,000	84,000
Total elongation (per cent.).....	0.	2.	6.5
Modulus of elasticity.....		17,240,000	15,625,000

The curve of number 3 is given on the diagram (Fig. 45) as A. Two tests of the "A" grade, on the same machine gave

5. Cast in sand.	Test piece	1 inch	long,	0.08 sq.	inch area.
6. Forged hot.	"	10 inches	"	0.25	" "

	5.	6.
Tensile strength (lbs. per sq. in.)	87,510	89,680
Elastic limit " "	———	50,000
Total elongation (per cent.).....	17.	29.7
Modulus of elasticity.....	———	15,741,000

The curve of number 6 is marked B on the diagram.

The test of a specimen of Cowles' bronzes of "A 3" grade, containing 8½ per cent. of aluminium, made by Professor Unwin, F. R. S., gave

Tensile strength.....	82,389 lbs. per sq. in.
Elastic limit.....	39,738 " "
Elongation	33.26 per cent.

Test pieces 10 inches long and 0.2 sq. inch area.

The B, C, D, and E grades decrease in tensile, transverse, torsional and compressive strength, and in elastic limit in the order in which they are named, but the extensibility increases as the other properties decrease.

Samples of Cowles' B and C grades, tested by Mr. Edw. D. Self, at the Stevens Institute, Hoboken, N. J., gave—

	B.	C.
Tensile strength (lbs. per sq. in).....	51,680	40,845
Elongation (per cent).....	4.1	11.2

A sample of the D grade, tested on the manufacturers' machine, gave a strength of 42,770 lbs., with 53 per cent. elongation.

FIG. 45.

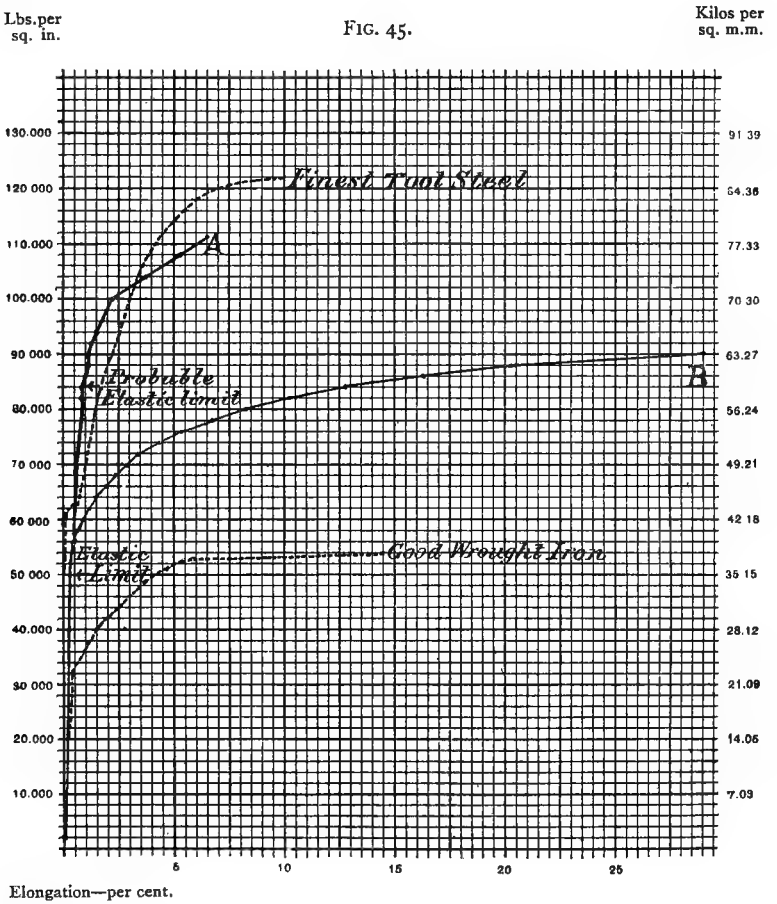

The bronzes made at Neuhausen by the Heroult process have been tested in Zurich with the following results:—

Grade.	Per cent. aluminium.	Tensile Strength. Kilos per sq. m.m.	Tensile Strength. lbs. per sq. in.	Elongation, per cent.
A	7	35.9	49,200	25.4
		38.7	55,060	27.3
B	7½	38.4	54,600	27.4
		40.7	58,320	25.5
C	8	36.4	51,760	34.3
		45.0	64,000	45.7
		46.3	65,950	48.4
D	8½	48.0	68,270	37.5
E	9	50.6	72,250	32.9
		51.6	73,380	39.2
F	9½	52.2	74,240	23.5
		56.0	79,650	16.1
G	10	55.3	78,620	18.5
		62.1	88,325	10.5
H	10½	59.0	83,915	12.0
		64.0	91,000	6.3

Professor Tetmayer, under whose supervision the above tests were made, made a series of bronzes from the pure metals, for the express purpose of testing, and obtained the following results:—

Per cent. of aluminium.	Tensile Strength. Kilos per sq. m.m.	Tensile Strength. Lbs. per sq. in.	Elongation, per cent.
5½	44	62,580	64.0
8½	50	71,115	52.5
9	57.5	81,780	32.
9½	62	88,180	19.
10	64	91,000	11.
11	68	96,720	1.
11½	80	113,780	0.5

The annexed diagram (Fig. 46) shows by its curves the variation of tensile strength and elongation of the aluminium bronzes with the increasing percentage of aluminium, the curves *C* and *C'* being taken from Cowles' advertised guarantee (1889), the elongation being the minimum and the strength the average values guaranteed in castings; *H* and *H'* represent the average values given by Professor Tetmayer for bronzes made by the Heroult process; *T* and *T'* represent Tetmayer's determinations with bronzes made from the pure metals.

FIG. 46.

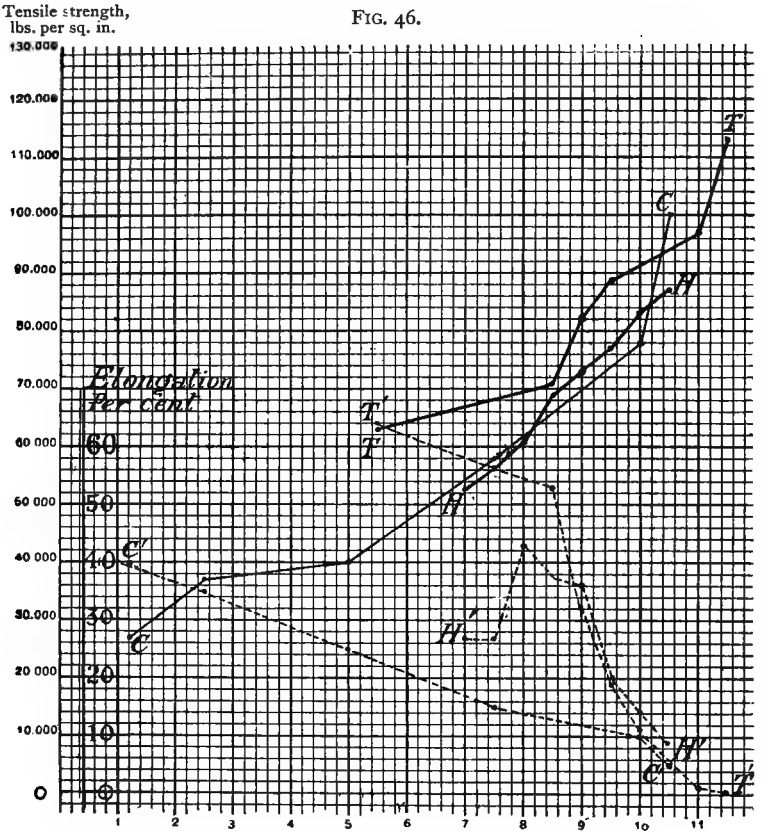

Le Chatelier has tested the resistance of 10 per cent. annealed bronze at different temperatures, with the following results—

Temperature.	Tensile strength.		Elongation.
C°	Kilos per sq. m.m.	Pounds per sq. in.	per cent.
15	53.2	76,000	19
100	52.4	74,800	22
150	51.0	72,800	21
200	49.2	70,200	22
250	47.0	67,000	21
300	44.2	63,000	19
350	37.0	52,800	15
400	23.2	33,000	21
450	10.0	14,200	23

These figures show that the bronze retains over three-quarters of its strength up to 300°, and show that it is admirably adapted for replacing copper tubes in steam boilers and for steam pipes.

Annealing and hardening.—Aluminium bronze acts like ordinary brass in these respects. It is softened by chilling; the best procedure is said to be to heat the articles to bright redness for some time, to destroy all crystalline structure, then cool in still air to full redness and plunge into cold water. The metal becomes very hard and stiff when worked for some time without annealing. To get the bronze to its maximum elasticity and hardness it must be cooled very slowly. Articles of bronze can be heated red-hot in charcoal powder and allowed to cool embedded in it. It is said that the bronze can be thus made elastic enough for the hair-springs of watches.

Working.—Despite the assertions that aluminium bronze can be heated to bright redness and then hammered out until quite cold, yet it is not so easily worked. Persons who have had a large experience with the alloy say that it possesses peculiarities in working which must be learned and strictly attended to. As with many other alloys, there is a certain temperature at which it works perfectly, but this is contained within narrow limits. This heat is rather indefinitely stated as full-redness. At a little above this heat (bright-red) or at a little below (low-red) it works with much less ease. If it is rolled at this temperature, it does not become brittle by working. When the bronzes are worked cold they will quickly stiffen up, and will crush or split unless annealed frequently. Working increases the strength and rigidity, but diminishes the extensibility. As aluminium bronze is such a strong metal, it is natural to expect that it would require a large amount of power to work it. This is the case, and accords with the fact that when Cowles Bros. first introduced their bronzes the workers of copper and ordinary bronze came very nearly breaking their rolls in endeavoring to work it; the steel workers, however, had no difficulty from this source. The Aluminium Brass and Bronze Company,

who work up the Cowles bronzes, have put in rolls which are even more powerful than those used for working steel billets of corresponding size. It is recommended to subject the billet at the first pass to the heaviest presure the rolls will give, in order to destroy at once any crystalline structure. When rolling cold, the lower grade bronzes can be worked for a longer time between annealings, but when rolling hot the higher bronzes give the least trouble.

When drawing the bronzes, they are first cast into rods of small diameter, annealed and then drawn. Very hard dies are required, or the ordinary bronzes, especially the higher grades, are apt to become so hard between annealings as to cut them.

The speed of drawing must be slow, and the reduction effected very gradually.

In regard to forging aluminium bronze, the statement that it can be forged perfectly at all temperatures from bright red to cold does not coincide with the experience of many workers. At a cherry red, the suitable temperature for rolling, it hardly forges at all. A much lower temperature must be used, a low redness, and at that heat it forges perfectly. Metal hammered from this heat until it is cold has its strength much increased.

Aluminium bronze can be spun, stamped, or pressed, like ordinary brass. In these operations it must be annealed after each successive treatment, since it hardens up so quickly under the great pressure.

In working with the file it is noticeable that the aluminium bronzes do not clog the file. Before the chisel it gives long, clean chips. On the lathe and planing machine the tool takes off long elastic threads and leaves a fine surface. It is especially in these cutting operations that the great advantages of a metal as strong as steel and yet as easy to work as brass become apparent. Simms states that aluminium bronze can be easily engraved, taking the sharp lines and deep cuts of the tool as well as any cast metal. Since it can be soldered, it forms a very suitable material for drawing into tubes. It is stated that it can even be hammered out into leaf, but this statement needs further proof.

Anti-friction qualities.—Along with the great toughness and malleability of aluminium bronze, as also its fine grain, we note a peculiar unctuousness or smoothness which seems to resist abrasion, and to render it one of the best anti-friction metals known. Morin held that to bring out the metal's best qualities it should not be used in castings, but as forged or rolled forms. He cites an instance where it was applied to the bearings of a large lathe, the axle having a diameter of 60 millimetres and making up to 1800 revolutions per minute. A plate of aluminium bronze was soldered in place on a common bearing metal back, and then carefully bored true. This bearing had been in use four years at the time of Morin's statement, and after 2½ years' working the wear was only 0.4 millimetre. Cowles Bros. recommend using the higher grades for bearings working under very heavy pressures, as their great strength prevents crushing, while the lower grades are more suitable for high speeds and low pressures. They recommend casting the bearings, bringing the working surface up to a high polish and using them only under steel axles.

An incident occurring under the author's immediate notice may be more to the point than quotations from other sources. A smooth metallic ball was required for a rotary steam engine, to work between steel guides in such a position that almost all the work of the engine passed through it. Steel balls were impracticable because they cut the guides. All sorts of bronzes and anti-friction metals were tried, but a few hours' work would cut them out of shape. Mr. Joseph Richards suggested to the maker that an aluminium bronze ball be tried. A ball was cast of ten per cent. bronze, but the casting not being solid it was warmed up and hammered until all the holes were closed. The ball was then turned smooth and polished. On putting into place it was worked several days at high speed without giving way, and on taking it out for examination the only sign of wear was that the polish was a little higher. I think that the hammering increased its capability of resistance, and would recommend that if the cast aluminium-bronze bear-

ings do not meet any extra requirements put on them, the hammered or rolled metal might be successfully substituted.

Conductivity.—The aluminium bronzes conduct heat and electricity better the lower the proportion of aluminium. Benoit measured the electrical conductivity of 10 per cent. bronze as 13, silver being 100 and copper 90. Edw. D. Self states that he found the heat conductivity of the 6 per cent. bronze almost the same as for pure copper, and that of the 10 per cent. bronze very little less.

Resistance to corrosion.—Deville said, "In chemical properties aluminium bronze cannot differ much from the other alloys of copper," yet from numerous experiments we have noticed that it does resist most chemical agents better, particularly sea-water and sulphuretted hydrogen.

Bernard S. Proctor,* after describing thirty-one experiments comparing aluminium bronze and brass, sums up the conclusions as follows:—

"From the above experiments it appears that aluminium bronze has a little advantage over ordinary brass in power to withstand corrosion, and its surface, when tarnished, is more easily cleaned. This should give it general preference where cost of material is not an important consideration, especially if strength, lightness and durability are at the same time desirable. It is out of my power to say anything about its fitness for delicate machinery, except that its chemical examination has revealed nothing which can detract from the preference its mechanical superiority should give it. Being so much less acted on by ammonia and coal-gas suggests its suitability for chemical scales, weights, scoops, etc. Its resistance to the action of the weather and the ease with which tarnish is removed render it especially applicable for door-plates, bell-handles, etc. Its mechanical strength and chemical inactivity together recommend it for hinges exposed to the weather. In experiments 18, 22, etc., the tendency of brass to corrode on the edges and at any roughness on its surface will be observed, while the

* Chem. News, 1861, vol. iv, p. 59.

bronze is free from this defect. In several cases the bronze seemed to be more quickly covered with a slight tarnish which did not increase perceptibly, probably the tarnish acting as a protection to the metal; but the brass, though less rapidly discolored, continued to be corroded and apparently with increased speed as the action was continued. The bronze is more easily cleaned. For culinary vessels its superiority to metals now in use appears questionable." The author states that he wrote the article with a home-made pen of aluminium bronze, and suggests that it is well worthy of the attention of pen-makers.

The Cowles Co. states in a pamphlet that salt-water, soap-water and urine have no effect on aluminium bronze, which would make it a very valuable metal for ship builders and sanitary engineers. It is well known that the fatty acids, as in tallow, corrode brass and bronze, as is seen in old fashioned brass candle-sticks, but aluminium bronze is said to be untouched by these agents. It is said that for preserving pans, in which fruit juices are boiled, aluminium bronze is superior in resisting power to the coppers now used. Sulphuretted hydrogen and coal-gas have hardly any effect on it. Hydrochloric acid dissolves out the aluminium, nitric acid dissolves out the copper. Tissier Bros. remarked that the color of the bronzes containing from 5 to 10 per cent. of aluminium could thus be altered at will by leaving in dilute nitric or hydrochloric acid. Concentrated sulphuric acid attacks it at first, but a coating is speedily formed which seems to protect the metal against further injury; dilute sulphuric acid attacks the alloy more deeply. Hot soda solution slowly removes the aluminium near the surface, leaving a velvety coating of copper oxide. The acid of perspiration is quite active in attacking aluminium bronze superficially, as any one can test by noticing how quickly a polished surface is tarnished. I do not think, however, that the corrosion is any more marked than other bronzes would show, and the tarnish is very easily removed and the polish restored by a little rubbing with a dry woolen cloth.

In order to test the suitability of aluminium bronze for boats, the following experiments were made at Neuhausen. Sheets of the metals were kept for 40 hours in (1) a solution of 3 per cent. sodium chloride and 4 per cent. acetic acid, (2) in sea-water. The comparative losses were as follows:—

	I.	II.
10 per cent. Bronze free from Silicon	1	1
10 per cent. Bronze with 2.89 per cent. Silicon	2	39
Brass with 3.59 per cent. of aluminium	4	101
Phosphor Bronze	32	116

When heated in the air, aluminium bronze remains unoxidized even if kept at a red heat for a long time. This is a remarkable property when contrasted with the behavior of brass wire, which would quickly turn to oxide. It is stated that it has been kept at a bright red heat for several months without showing any oxidation. As a chemist, who has in common with all other chemists been annoyed by the oxidation of brass wire when heated over a Bunsen burner, I hope that aluminium bronze wire gauze will soon be made for this purpose.

When exposed to the weather, the tarnish formed is very superficial and protects the metal underneath from continued oxidation. The aluminium bronzes take on a darker hue, after some exposure, but they never turn black like ordinary bronzes, or green like brass. Since the color of out-door bronze statues is only preserved by a coat of lacquer, which hides many of the most artistic strokes, the value of a bronze which will stand the weather unprotected should be utilized by the art casters. It has been proposed to cast cannon of aluminium bronze, and this incorrodibility gives it an advantage over all other bronzes for this purpose. A commission appointed by the Austrian Government in 1888, to report on various types of rifle barrels, tested, among other materials, aluminium bronze. Two rifles, one with a steel barrel the other of aluminium bronze, were left in the gutter on a roof for several weeks. On examining them, the steel gun was rusted so far as to be completely useless, while the bronze barrel was

only slightly tarnished and was loaded and fired without cleaning and without accident.

Uses of the aluminium bronzes.—The previous remarks have necessarily contained allusions to the many uses to which these bronzes may be advantageously applied. Their resemblance to gold early caused their use for jewelry, watch-chains, etc., but the ease with which their fine polish is tarnished by perspiration makes them unsuitable in this direction. Their wearing qualities make them valuable bearing metals, being also especially applicable to parts of machinery subject to heaxy strain and rapid work, such as weavers' shuttles, ball-bearings, pin pivots, etc. It seems to be the great strength united with considerable malleability which gives these wonderful wearing qualities.

The Engineering and Mining Journal * suggested that aluminium bronze should make excellent battery, sizing and jig-screens for mining and ore working machinery. The Cowles Company soon afterwards placed milling screens of 5 per cent. bronze on the market, and they have given excellent satisfaction. Screens of this bronze lasted six months, while Russia-iron screens broke through in two weeks.

The considerable resistance of aluminium bronze to chemical agents has suggested its use as a material for pumps and machinery subjected to the action of acid mine-water. It is said that the Worthington Company have used it in their high pressure mine-pumps.

Mr. Strange,† an English engineer, made a thorough discussion of the suitability of aluminium bronze for the construction of astronomical and philosophical instruments, and concluded that it was superior not only in some, but in all respects to any metal hitherto used for that purpose.

Mr. A. H. Cowles read a paper before the U. S. Naval Institute, October 27, 1887, urging the merits of aluminium bronze

* August, 1887.

† Chemical News, vii., p. 220.

as a metal for casting heavy guns. Reference was made to the casting of a mountain howitzer of this bronze in 1860, which stood every test put upon it by the French artillery officers, and which would have caused a revolution in cannon material but for the fact that its cost was prohibitory. The principal points made by Mr. Cowles are—1. The great strength and high elastic limit of aluminium bronze. 2. Its ductility. 3. The sound castings it produces. 4. The fact that no liquation takes place during cooling, as in ordinary gun bronze. 5. No tendency to crystallization, as is the case with steel. 6. No rusting or corrosion. 7. Seventy per cent. of the cost of the gun is represented by the metal, which may be melted over when the gun is worn out. 8. Even with this high cost of metal, the total cost of the gun would be only four-fifths that of a built-up steel gun. While the discussion following the reading of this paper was not altogether in favor of the solid gun *versus* the built-up gun, yet no doubt was expressed that for casting solid guns aluminium bronze was undoubtedly the best metal that could be used, and as regards its comparison with built-up steel guns, the sum total of the discussion seemed to point to the expectancy that the bronze gun would be as good, if not better. But, as Deville was wont to say, "It is not necessary to theorize if you can make the experiment," and we hope soon to see a large aluminium-bronze cannon successfully cast and its exact worth demonstrated.

Aluminium bronze has been used very advantageously as a material for propeller blades. Its freedom from galvanic action, its non-corrosion by sea water, and its great strength, make it particularly well adapted for this use. Quite a long discussion on this subject was printed in London *Engineering* during April and May, 1888, raised principally by the makers of manganese bronze, but it was shown conclusively that in every point in which the latter was claimed to be of special advantage, aluminium bronze was still more advantageous. The Webster Aluminium Co. cast a propeller for a vessel whose bottom was subjected to the destructive influence of tropical waters,

and it was used with the most satisfactory results as regards freedom from corrosion. I understand that several of the new U. S. gunboats have aluminium bronze propellers, since as speed is a great requisite, the lightening of the blades made possible by the use of a much stronger metal is of considerable advantage.

Besides the items mentioned, we might conclude by saying that if aluminium bronze were as cheap as brass or ordinary bronze, there is hardly a single use that can be mentioned for which it would not be preferred; since it costs more than these, it will be used for all those purposes for which it is of particular excellence, and its use will extend in a largely increasing proportion as its cost is lowered. Its specific gravity is not so much lower than ordinary brass or bronze as to cause its use on this account, but the fact that its superior strength allows a large decrease in weight without any less strength than with the other metals, will aid greatly in increasing its sphere of usefulness. The fact that it will not rust gives it always the advantage over steel in out-door uses, and the fact that it can be cast perfectly will cause it to replace complicated steel forgings.

With aluminium bronze at the prices now made possible by the low prices of aluminium and copper, it should be able to drive all other strong bronzes out of the field.

Brazing.—Aluminium bronze can be brazed easily at a red heat, using ordinary brazing solder (zinc 1, copper 1) and 3 parts of borax.

Soldering.—Deville stated that aluminium bronze could be soldered with ordinary hard solder at a low red heat. It resists the common soft solders at ordinary temperatures, but if some zinc amalgam is added it can be soldered cold. Schlosser* gives the following directions for preparing this solder: White solder is alloyed with zinc amalgam in the proportions

White solder	2	4	8
Zinc amalgam	1	1	1

* Das Löthen, p. 180.

The white solder may be composed as follows:—

Brass	40	22	18
Zinc	2	2	12
Tin	8	4	30

The zinc amalgam is made by melting 2 parts of zinc, adding 1 part of mercury, stirring briskly and cooling the amalgam quickly. It forms a silver white, very brittle alloy. The white solder is first melted, the finely powdered zinc amalgam added and the alloy stirred until uniform and poured into bars.

The Cowles Co. recommend the following solders as effective and convenient for aluminium bronze jewelry:—

Hard solder for 10 per cent bronze—

Gold	88.88
Silver	4.68
Copper	6.44

Middling hard solder for 10 per cent. bronze—

Gold	54.40
Silver	27.00
Copper	18.00

Soft solder for Al bronze—

Copper 70 per cent. Tin 30 "	Bronze	14.30
	Gold	14.30
	Silver	57.10
	Copper	14.30

The aluminium bronzes can be easily brazed, using borax or borax and cryolite as a flux. A cheap bronzing solder is an alloy of equal parts of zinc and copper, or 46 parts zinc, 52 copper and 2 tin. Butt and lapped joints made in this way are from one-half to one-third as strong as the bronze itself, and stand hammering or rolling.

Silicon-aluminium bronze.—Cowles Bros. have, by reducing fire-clay in presence of copper, obtained alloys of aluminium, silicon and copper. This alloy is white and brittle if it contains

over 10 per cent. of aluminium and silicon together. With from 2 to 6 per cent. of these in equal proportions, the alloy is stronger than gun metal, is very tough, does not oxidize when heated in the air, and has a fine color. With 10 per cent. of aluminium and 2 or 3 per cent. of silicon, Cowles Bros. claim to have produced one of the strongest metals known.

Phosphor-aluminium bronze.—Thos. Shaw, of Newark, N. J.,* patents a phosphor-aluminium bronze, making the following claims: First, an alloy of copper, aluminium and phosphorus, containing 0.33 to 5 per cent. of aluminium, 0.05 to 1 per cent. of phosphorus, and the remainder copper. Second, its manufacture by melting a bath of copper, adding to it aluminium in the proportions stated, the bath being covered with a layer of palm oil to prevent oxidation, and then adding a small proportion of phosphorus.

It has been stated that thfs alloy has a high conductivity (presumably for electricity), but I am unable to find any determinations or evidence of any kind to substantiate this statement.

Boron-aluminium bronze. H. N. Warren, of Liverpool, England, produces first alloys of aluminium with boron (see p. 498). These crystalline, brittle alloys are then dissolved in copper to the extent of 5 or 10 per cent. The bronze produced is described as melting sharply, casting well, and showing no signs of liquation. No information has been given as to its mechanical properties.

* U. S. Patent, 303,236, Aug., 1884.

CHAPTER XVI.

ALUMINIUM–IRON ALLOYS.

ALTHOUGH aluminium does not appear to combine as energetically with iron as with copper, yet the affinity between these two metals is sufficient to cause their combination in all proportions. The useful alloys, however, are confined to those containing a small amount of aluminium, the addition of small quantities of iron to aluminium producing no useful result.

Iron is one of the most obstinate impurities in commercial aluminium. About the only way to obtain aluminium free from iron is to keep the materials from which it is made scrupulously free from that metal, since if it once gets into the aluminium, it is almost impossible to remove it. As to its exact influence on the properties of aluminium, when in small quantities, we may say that it renders the color more of a gray, the aluminium becomes harder, less malleable, and appears to crystallize more readily. The most noticeable effect, however, is on the fusibility. Tissier Bros. observed, somewhere about 1857, that aluminium free from iron could be melted on a plate of aluminium containing 4 to 5 per cent. of that metal. Deville also observed that if a large amount of iron was present (10 per cent.), the aluminium could be liquated by careful heating, a ferruginous skeleton remaining, while aluminium containing less iron flowed away. This process, however, could not be used for the ultimate purification of commercial aluminium, since when the percentage of iron is low no liquation takes place. The exact rise in the melting point due to the presence of iron has been recently determined by Prof. Carnelly. He found that a specimen of aluminium containing 0.5 per cent. of iron melted very close to 700°C., whereas a specimen containing 5

per cent. of iron did not even soften at that temperature, but commenced to fuse at about 730°.* The effect of the iron is particularly seen in rendering the fusion pasty. Since silicon acts in an almost similar manner, it is important to observe that commercial aluminium can contain a certain small quantity of iron with very little detriment only on condition that the amount of silicon present is small.

Tissier Bros. took pure aluminium in small pieces, mixed it with bits of pure iron wire, and melted in a crucible under common salt. The alloy with 5 per cent. of iron thus made was harder, more brittle, and less fusible than pure aluminium. The alloy with 7 per cent. of iron differed from the preceding principally in showing a stronger tendency to crystallize. With 8 per cent. of iron the alloy crystallized in long needles. Deville states that the alloy containing 10 per cent. of iron has the color and brittleness of native antimony sulphide (stibnite).

By melting together 10 parts of aluminium, 5 parts of ferric chloride, and 10 parts each of potassium and sodium chlorides, Michel obtained a crystalline mass, which by careful treatment with very dilute hydrochloric acid left some six-sided crystals, having the color of iron, and agreeing nearly to the formula Al_2Fe, containing 51 per cent. of iron.† These crystals dissolved easily in hydrochloric acid; caustic soda dissolved out the aluminium. Calvert and Johnson obtained the alloy Al_2Fe_3 (see p. 420), containing on analysis 24.55 per cent. of aluminium—the formula calling for 24.34 per cent. Globules of this alloy were white, did not rust in moist air, and when treated with weak sulphuric acid gave up the iron, while the aluminium remained as a skeleton, having the shape of the original button. These experimenters also obtained an alloy containing, in two different experiments, 12.00 and 12.09 per cent. of aluminium. The formula $AlFe_4$ requires 10.76 per cent. This alloy was extremely hard, and rusted on exposure to the air; but could be forged and welded.

* These temperatures are both too high, which does not, however, affect the comparison.

† Ann. der Chemie und Pharm., 115, 102.

The iron-aluminium alloy which is being largely used at present for introducing aluminium into iron and steel is generally made with 5 to 15 per cent. of aluminium and has received the trade name of "ferro-aluminium." Several different makes of this alloy are on the market, some made directly from alumina, others made by adding aluminium to iron. An analysis of Cowles Company's ferro-aluminium has already been given. The grade mostly supplied by this company averages 6 to 9 per cent. of aluminium, with 2½ to 3½ per cent. of silicon, and about 3 per cent. of carbon. When ferro-aluminium is made by alloying aluminium with iron, a good quality of pig-iron is chosen, and when melted the aluminium, in bars, is seized in tongs and dipped under the surface. A rise of temperature occurs, and a noticeable separation of graphitic carbon, causing "kish" to collect on the surface. It is said that the pig-iron thus alloyed has its combined carbon almost entirely converted into free carbon, losing sometimes as much as 2½ per cent. in weight thereby. When all the aluminium required has been added, the melt is stirred, the crucible remaining in the furnace; then it is let stand for a few minutes, taken out of the fire, skimmed clean and cast into slabs or bars.

These alloys (ferro-aluminiums) are very hard, brittle, easily broken, and yellowish-white in color. Ledebuhr states that as the percentage of aluminium increases the iron becomes less magnetic, and at 17 per cent. the alloy is non-magnetic. It is said that in the works where the alloy is being made a workman can, after a few practices, grade the alloys roughly by a simple magnetic test, even some degree of accuracy being finally attainable. Since wrought-iron and steel are very sensitive to small amounts of impurities, it is important that the ferro-aluminium added to them should be as pure as possible, being made from the purest pig-iron; this condition is of less importance when operating on cast-iron. This has led to the manufacture of two grades of ferro-aluminium, one for ordinary foundry use, the other for steel and mitis-castings.

Pig-irons and commercial iron and steel do not take up any

appreciable quantity of aluminium in the process of their manufacture. Blair states that he finds aluminium nearly always present as such in steels, but only in quantities of a few thousandths of a per cent., such as, from actual analyses, 0.026, 0.029, 0.034 per cent. Corbin reported 2.38 per cent. in chrome steel, but Blair finds chrome steel to contain no more aluminium than other steels. Aluminium is very seldom reported even in the smallest amount in wrought-iron, since the puddling process may be reasonably expected to eliminate almost entirely any that might be in the pig-iron. Conflicting views have been expressed as to the presence of aluminium in pig-iron. As much as 1 per cent. has been reported in German gray-iron; Grüner states that some English pig-irons contain 0.5 to 1 per cent., and some Swedish irons 0.75 per cent. Percy quotes an analysis of pig-iron showing 0.97 per cent. of aluminium, but questions its correctness, supposing that much of this might have come from aluminium contained in included slag. The Marshall furnace, at Newport, Pa., has produced iron containing as much as 0.9 per cent. of aluminium, working with a slag carrying 25 per cent. of alumina. (See p. 428.)

Faraday and Stodart obtained an alloy containing 3.41 per cent. of aluminium by melting an iron carbide with alumina at a very high heat. This alloy is described as being white, close-grained and very brittle. G. H. Billings (see p. 424) made an alloy containing 0.52 per cent. of aluminium and 0.2 per cent. of carbon. Its fracture showed solid, homogeneous and finely crystalline, like steel with 1 per cent. of carbon. It forged very well at cherry redness, but crumbled to fragments at a yellow heat; it would not harden.

As the principal use of aluminium in iron is as a refining agent, we will sub-divide the remainder of this chapter into three parts; namely, the effect of small quantities of aluminium on (1) steel, (2) wrought-iron, (3) cast-iron.

Effect of Aluminium on Steel.

Although A. A. Blair found aluminium almost always present

in steel as a few thousandths of a per cent., yet he was not able to determine that so small a quantity had any appreciable effect on the properties of the metal.

Faraday, in seeking for the distinguishing ingredient of the famous Bombay Wootz-steel, found that it always contained aluminium in quantities varying from 0.0128 to 0.0695 per cent. In order, then, to prove the case synthetically, Faraday and Stodart took an alloy of iron with 3.41 per cent. of aluminium and a little carbon, and melted it in various proportions with steel. On melting 40 parts of the alloy with 700 of good steel (introducing 0.18 per cent. of aluminium), a malleable button was obtained, which on treatment with acid on a polished surface gave the beautiful damask peculiar to Wootz. On melting 67 parts of alloy with 500 steel (introducing 0.4 per cent. of aluminium) the resulting button forged well, gave the damask, and "had all the appreciable characteristics of the best Bombay Wootz." Karsten could not find any aluminium in specimens of Wootz which he examined, and suggested that that found by Faraday was due to intermingled slag; but the latter found aluminium in the steel without silica, which seems to prove that his results are beyond question.

Rogers* corroborated the above results obtained by Faraday. He melted an iron-aluminium alloy with steel in quantity sufficient to introduce 0.8 per cent. of aluminium. The product had great hardness, a bright silver-like polish, and when treated with dilute acid acid gave the undulating markings peculiar to Damascus steel and Wootz.

With aluminium costing $12 to $16 per lb. it can be readily seen that this use could not be practiced commercially; but, with aluminium at less than half that price, and especially with even more economical ferro-aluminium to be had, these old references were looked up, and many steel-makers began trying the virtues of aluminium. Since 1885 hardly a maker of crucible steel and steel castings but has made some experi-

* Moniteur Industriel, 1859, p. 2379.

ments in this line. It had long been known that if alumina is added during the melting of steel in a crucible, the grain and lustre are improved. It was found that ferro-aluminium, added just before pouring, had the same effect; and since the latter operation is under exact control, it is preferred to the former practice, providing that the ferro-aluminium can be obtained pure enough for this use.

From experiments made at Faustman & Ostberg's Mitis Foundry at Carlsvick, Sweden, in 1885, it was proved that ferro-aluminium is of great use in making steel castings, and the process was patented by Wittenstrom.* Wrought-iron scrap was melted in crucibles, carbonized to hard steel by adding pure pig-iron, and before pouring, ferro-aluminium added to supply 0.1 per cent. of aluminium. The steel was then cast into the shape of ordinary edge-tools, which needed only to be hardened and ground in order to be ready for use. The surface of these tools was very clean and took a high polish. It was found that manganese, which is so often purposely introduced into steel, was deleterious in its action on steel containing aluminium, and that mild steel almost free from manganese gave by far the best results when aluminium was added. If true, this is a curious fact which it is not easy to see the cause of. In Bessemer practice it is evidently of no use to add ferro-aluminium before blowing, but it has been thrown into the converter just before tipping into the ladle, and Mr. Ostberg states that Bessemer ingots containing only 0.06 per cent. of carbon have been thus made which did not rise in the mould at all, and were solid and of good quality throughout. Similar advantages should also result on treating Siemens-Martin steel in this way, and perhaps even greater advantages, since mild steels are so much more difficult to cast solid than high-carbon steel.

At present aluminium is in general use among steel-casters. Some add it in the crucible or furnace, others put it into the ladle or runner, while others even drop it into the main pour-

* U. S. Patent, 333,373; Dec. 29, 1885. English Patent, 8,269; July 8, 1885.

ing gate of the mould and pour the steel onto it. The latter method of procedure has been found by far the most economical, and even superior in efficiency.

The Phœnix Iron Company of Germany report that 0.2 per cent. of aluminium added (as ferro-aluminium) to their basic Siemiens-Martin steel gave them a metal with a tensile strength of 112,000 pounds per square inch, with 12.5 per cent. elongation, whereas the best results previously attained were never over 100,000 pounds. Swedish works have found that an addition of 0.02 to 0.025 per cent. to a Bessemer steel with 0.9 per cent. of carbon, ensures good castings; in Martin steel of 0.65 per cent. carbon, 0.01 per cent., put into the gate of the moulds, ensures dense ingots. In the latter steel, when casting ingots of 400 kilos weight, containing 0.15 per cent. of carbon, and using no aluminium, a zone of blow-holes was formed about 5 centimetres from the sides of the ingot; using 0.02 per cent. of aluminium, superficial blows appeared in such quantities as to make the ingot unsalable; with 0.04 per cent. the ingot was free from blow-holes and almost faultless.

In general, low carbon steel requires more aluminium to give sound castings than high carbon metal, Bessemer more than Siemens-Martin steel, and in any case more aluminium is required when it is added to the metal in the ladle than when dropped in small pieces into the flask during the pouring. The Swiss makers of aluminium, who should be naturally interested in selling as much aluminium as possible, recommend for steel the addition of only 0.004 to 0.025 per cent.; for carbonless iron 0.01 to 0.1 per cent., the latter being sufficient to quiet overblown iron which is "wild" in the ladle.

It is also important not to add too much aluminium to steel, because of the excessive shrinkage any excess causes. In high carbon steel, any considerable amount of aluminium left over also decreases its strength by separating out some of the combined carbon as graphite. It is therefore sometimes good policy to add a little less aluminium than is necessary to completely eliminate the blow-holes, preferring to have a few of

these left than to have a large shrinkage cavity. Ingots of aluminium-steel have been made, at a time when its use was not properly understood, which contained a "shrink" clear to the bottom of the ingot. It was hoped that perhaps the use of aluminium as a deoxidizer would render manganese unnecessary. P. A. Gilchrist investigated this point, and found that with aluminium alone the steel is red-short, so that while the manganese is less necessary, it is not rendered superfluous.

An interesting effect of the addition of aluminium to soft steel is the increased ease of welding. Specimens have been shown by the Cowles Syndicate Co., in England, of iron welded to Siemens-Martin steel with and without aluminium. With the ordinary steel the line of weld was clearly visible, but with steel containing 0.2 per cent. of aluminium no such line could be seen, the crystalline structure of the iron appearing to merge gradually into the fine grain of the steel, even under the microscope.

We shall see later that the addition of aluminium to cast-iron tends to separate combined carbon as graphite. This probably accounts for the poor results obtained by adding ferro-aluminium to high carbon steels; for these, melting more easily and fluidly than mild steels, would be made less fusible by the decrease in combined carbon and possibly also made pasty by graphite being entangled in the metal as it thickens. As illustrative of this point we will quote the experiments made by R. W. Davenport.* A large charge of carbonless ingot iron holding about 0.08 per cent. carbon, and boiling strongly, was tapped into two similar ladles and ferro-manganese added in order to convert it into a low-carbon steel. Into one ladle was put, in addition, ferro-aluminium sufficient to introduce 0.064 per cent. of aluminium. Both ladles were then teemed into sand castings and ingot moulds. The steel treated with ferro-aluminium lay perfectly dead and piped in the ingot moulds, and yielded practically solid sand castings; the other

* Howe's Metallurgy of Steel.

rose in the moulds, had to be stoppered, and gave very porous sand castings. On another occasion, ferro-aluminium sufficient to introduce 0.04 per cent. of aluminium and 0.10 per cent. of silicon was added to molten crucible steel, which owing to the presence of carbon and manganese evolved no important quantity of gas. This steel contained 0.25 per cent. of carbon. The result of adding the aluminium was to stiffen this steel, make it hard to pour and difficult to get solid castings.

Mr. J. W. Spencer,* of the Newbern Steel Works, Newcastle-on-Tyne, made a series of tests on this subject of the effect of aluminium on crucible steel, and reached a similar conclusion. With a low carbon steel, the effect on the tensile strength increased with the increase of aluminium, but it was found on analysis that the amount of silicon in the metal was also increased by the treatment, which may partly account for the difference in strength. The following table shows these results:—

Carbon in steel. (per cent.)	Aluminium added. (per cent.)	Silicon present. (per cent.)	Elastic limit. (tons per sq. in.)	Tensile strength. (tons per sq. in.)
0.10	0.12	0.06	9.8	20.8
0.15	0.22	0.08	10.2	21.8
0.28	0.43	0.22	12.0	25.5

These three steels were described as "fluid, sound and tough," excepting the last which was brittle before annealing. They were all stronger before annealing. With high carbon steels most of these properties were reversed, as is seen by the following results:

Carbon in steel. (per cent.)	Aluminium added. (per cent.)	Silicon present. (per cent.)	Elastic limit. (tons per sq. in.)	Tensile strength. (tons per sq. in.)
0.53	0.12	0.28	14.38	29.60
0.65	0.22	0.28	14.38	26.28
0.85	0.43	0.40	15.80	21.87

In these cases, as in the previous ones, the increase in carbon and particularly silicon would cause a corresponding increase in

* Iron Age, Dec. 22, 1887.

tensile strength; but it is very noticeable that with carbon over 0.5 per cent. the strength decreases with the increase of aluminium, in spite of a simultaneous increase in both carbon and silicon. These steels are also described as fluid and running into sound castings, but they are brittle and hard before annealing, particularly the one containing most aluminium. Mr. Spencer sums up his experience as follows: "The result is satisfactory in every instance so far as soundness and the usual attributes of good castings are concerned, running fluid and without ebullition into sharp, clear castings; the milder mixtures, under the hammer, breaking very strong, though unannealed. The general conclusion from the mechanical tests is that though aluminium may increase the elastic limit and tensile strength slightly, yet this is done at the expense of ductility, while in presence of high carbon it is disadvantageous in all these respects. It is also probable that the increase of elastic limit and tensile strength, when it does occur, is not more than can be accounted for by the carbon and silicon present. The chemical reactions of the aluminium in the crucible may be various, but the prevention of blow-holes and increased fluidity are the chief advantages."

In order to avoid introducing impurities into steel by using ferro-aluminium made from ordinary pig-iron, a German firm put on the market a steel-aluminium "containing 10 per cent. of aluminium and 90 per cent. of pure cast-steel." This can of course be used instead of ferro-aluminium for any purpose, but it is particularly preferable in treating steel, which is so extremely sensitive to minute quantities of certain impurities—sulphur, phosphorus, etc.

The *rationale* of the action of aluminium in preventing blow-holes and increasing the fluidity of the metal will be discussed more at length in considering the action of aluminium in the mitis process, a little further on.

Effect of Aluminium on Wrought-Iron.

When wrought-iron is heated to a high temperature, it does

not pass quickly into the fluid state, but for a large increase of temperature above the point at which it first softens it will remain thick or mushy. At a very high temperature it can be made sufficiently fluid to pour into moulds, but the castings thus made are notably unsound and weak. It was discovered by Mr. Wittenstroem, of Stockholm, working with the co-operation of Mr. L. Nobel, of St. Petersburg, that if a small amount of aluminium is added to a charge of wrought-iron which has been heated until pasty, the iron immediately liquefies and can be poured into castings having all the properties of wrought-iron except fibre, and as sound as if of cast-iron. This idea was investigated thoroughly at Nordenfelt's malleable-iron foundry, in Carlsvick, Sweden, by Messrs. Wittenstroem, Nordenfelt, Faustman and Ostberg. The result of two years' experimenting during 1883 and 1884 was so successful that the malleable-iron plant was pulled down and a new foundry, operated by Faustman and Ostberg, supplied their former trade with wrought-iron castings, which were called "Mitis" castings by Mr. Nordenfelt, because of their softness in contrast with cast-iron castings. This plant began operations in January, 1885, and its product soon reached a larger sale than that of the malleable castings which it had supplanted. Mr. Ludwig Nobel also installed the process in his foundry at St. Petersburg at about the same time. The process was represented by a fine display at the International Inventions Exhibition in London, in 1885, and received a gold medal. In 1885, Mr. Ostberg visited the United States for the purpose of establishing the process here,* and a plant was erected and put in operation at Worcester, Mass. In February, 1886, Mr. Ostberg spoke before the Institute of Mining Engineers at their Pittsburg meeting, showing specimens of the castings; an experienced iron worker said on that occasion that he would not have believed the statements if they had not been proved by the sight of the castings. In the same month, the "United

* U. S. Patent, 333,373; Dec. 29, 1885.

States Mitis Company" was incorporated in New Jersey, W. F. Durfee, M. E., of New York, being general manager, Mr. Robt. H. Sayre, of Bethlehem, Pa., president, and the list of directors including Mr. John Fritz, manager of the Bethlehem Iron Works, and several other well-known gentlemen. The object of this company, which owns the "Mitis" patents for the United States, is to regulate the use and sell rights to work under these patents; and it is said that five plants are now in operation in the United States. Abroad, plants are working in England, France, Germany, Austria, Sweden and Russia. The experimental plant started at Worcester, Mass., has been abandoned for some time, it being said that the success achieved there was anything but brilliant; but since the process does succeed in other places, the plant in question was probably closed for reasons satisfactory to those concerned.

Such, in brief, has been the rise of the mitis process. It seems to have found its sphere in replacing malleable iron castings, because principally of the superior toughness of mitis metal, although the castings are not so uniformly sound and trustworthy, nor hardly so cheap, as those of malleable iron.

The following details of the production of mitis castings are from descriptions by Nordenfelt, Ostberg, and E. A. Cowper, of London:—

Raw material.—As the raw material to operate on, wrought-iron scrap or mild steel are equally suitable. It was found that some of the best results are to be obtained by using Swedish scrap-iron or English hematite-iron—that is, materials containing less than 0.1 per cent of phosphorus, which is a very injurious ingredient if present in much larger quantity. Using a mixture with poorer quality iron, with phosphorus running up to 0.15 per cent., good results may still be obtained, that is, the castings still compare favorably with ordinary malleable castings. In using scrap steel, which is necessarily low in phosphorus, it was found that manganese interfered with the production of good castings, a result rather unexpected. Since almost every melter devises various mixtures of his own, as circumstances

permit, it is but natural that we find the best features of the mitis process united with some other old-established practices. Thus, in one mitis plant in this country the mixture for melting was composed of:

Mitis scrap	35	per cent.
Hematite muck bar	35	"
Wrought iron punchings	12⅔	"
Soft steel scrap (0.1 per cent. carbon)	12⅔	"
White pig-iron	3	"
Ferro-silicon (10 per cent. silicon)	1	"
Ferro-aluminium (6 per cent. aluminium)	⅔	"

It is seen that in this charge the melter used a little white iron as a flux, which would probably introduce 0.1 per cent. of carbon; then the virtues of ferro-silicon for making sounder castings are utilized by adding 0.1 per cent. of silicon to the charge; lastly, 0.04 per cent. of aluminium was introduced.

In general, it may be said that if iron free from impurities is used, very good castings are obtained; if iron is used with a large percentage of phosphorus, proportionately brittle and unsatisfactory castings result.

The ferro-aluminium used should be, for similar reasons, free from any considerable amount of such impurities as generally injure wrought-iron.

Since the castings are almost identical in composition with the charge of iron melted, the following analyses of mitis metal, made by Mr. Edward Riley, will show the range of material or mixture to which the process has been successively applied:—

Raw material.	Carbon.	Silicon.	Phosphorus.	Manganese.
Hematite bar	0.067	0.161	0.068	0.022
Swedish scrap	0.053	0.044	0.077	0.027
Refined iron	0.130	0.124	0.137	0.014
½ Staffordshire iron, ½ Swedish scrap	0.130	0.035	0.150	0.026
⅔ Staffordshire iron, ⅓ Hematite bar	0.070	0.093	0.194	0.014
Staffordshire iron	0.106	0.080	0.250	0.014

The above figures are percentages; sulphur was present in all

as a trace. The first in the table, those low in phosphorus, gave the best castings, the last the poorest; with over ¼ per cent. of phosphorus, the castings were brittle. As already stated in considering steel castings, mixtures containing higher percentages of carbon had been treated, but there seems to be a limit to the increase of this element, above which the addition of aluminium is no longer helpful, but even deleterious.

Method of treatment.—The charge of wrought-iron is placed in covered crucibles and brought to a temperature of about 2200° (Mr. Ostberg), at which heat it is just losing the solid and assuming the pasty condition. If it were desired to cast the iron without adding aluminium, it would be necessary to superheat it several hundred degrees above this point, not only to give it the desired fluidity, but also to permit it being carried around the casting shop. It is during this superheating that a large part of the gases contained in the molten iron are absorbed. If, therefore, the charge is treated with aluminium immediately on reaching the melting point, the effect is such that this superheating with its accompanying deterioration of the iron is rendered unnecessary. This is possible for the reason that on adding ferro-aluminium sufficient to introduce 0.05 to 0.1 per cent. of aluminium, the charge immediately liquefies, and is so far from its setting point that it can be removed from the furnace and poured into numerous moulds, retaining all the time its exceptional fluidity. The metal acts just as if it had been superheated several hundred degrees, but this has been accomplished without leaving it in the furnace for half an hour or so, thus attaining an economy in fuel which is not to be ignored. When the crucible is taken from the furnace the charge is perfectly *dead melted*, lies quiet in the crucible, exolves no gas and teems like molten silver. It is cast in either sand or iron moulds, and on account of its fluidity does not require large heads to bring the castings up sharp and show the finest impressions of the mould.

Several devices are used in connection with this process which it may be interesting to note. The furnace used is one

designed and patened by Mr. Noble, and burns naphtha or crude petroleum or petroleum residues. A full description with drawings may be seen in Engineering and Mining Journal, May 8, 1886. With this furnace are melted on an average 8 heats in 10 hours. Starting cold, the first charges are melted in 1 ¼ hours; when the furnace is fully up to heat only ¾ hour is necessary, so that the furnace is equal to 24 heats in 24 hours. Any one familiar with steel melting will recognize this as a great improvement in melting furnaces. The difficulty met with in this country has been to get oil of uniform quality. At the Chester Steel Casting Works they state that with one car of oil the furnace works splendidly, but with the next they may have difficulty in keeping up the heat. A supply of oil of uniformly good quality is necessary for the successful working of this furnace. A patent pouring ladle is also used in which the metal is kept up to its original heat as long as is needed in order that a number of castings can be all poured at the same temperature. The moulding material used is pure fire-clay, hard burnt, finely ground and mixed with sugar or molasses as a binding material. This is perfectly fire-proof at the temperature of the molten wrought-iron, and is said to answer well.

Properties of mitis castings.—The material being practically wrought-iron, the castings do not have to be annealed before using. The thinnest or most complicated castings can be produced, which it would be almost impossible to forge in wrought-iron, thus furnishing difficult forged pieces at not much greater expense than ordinary castings. When there is less than ¼ per cent. of phosphorus present, the castings can be welded and forged in all respects as wrought-iron. The castings come out of the above moulding material with a remarkably smooth surface and a peculiar bluish tint; there is no sand burnt into their surface. The castings are as ductile as the iron from which they are made, but when tested for elongation under stress it was found that they did not elongate so much. This is counterbalanced, however, by the fact that as mitis metal

contains no intermingled slag and absolutely no fibre, it has the same strength and elongation in all directions. In general, the tensile strength of the iron is increased, Mr. Ostberg says 20 to 50 per cent., but the lower figure is probably nearer correct. Experiments at the Bethlehem Iron Works showed 10 per cent. increase in tensile strength, with no change in the elongation. Mitis castings are, in short, objects cast in low-carbon iron, yet having all the desirable properties of wrought-iron. The uses to which they can be put are very numerous, including all purposes for which malleable castings are suitable, and particularly to replace complicated or even impossible forgings in any shape which admits of casting.

Rationale of the process.—The following facts are to be explained: 1. On adding ferro-aluminium to wrought-iron brought into a pasty fusion, the charge immediately becomes very liquid. 2. The castings made of metal thus treated are almost entirely free from the blow-holes which render ordinary wrought-iron castings almost useless.

Mr. Ostberg's explanation of the first point is that the addition of the aluminium produces a sudden lowering of the fusing point of the wrought-iron by some 150° to 250°, thus leaving the metal superheated to that extent above its *new melting point*, and consequently with greatly increased fluidity. That this view is erroneous has been shown by the fact that the aluminium added does not remain in the iron. Numerous analyses made abroad have failed to find any aluminium in the castings. Mr. R. W. Davenport, a trustworthy analyst, could find it in no instance. Mr. A. A. Blair, of Philadelphia, one of the greatest authorities on the analysis of iron and steel, has been unable to find any, and considers it very improbable that 0.03 per cent. could escape detection. Mr. Ostberg also admits that it has never been detected, and virtually abandons his explanation by saying, in a letter to Mr. Howe, "An iron may contain 1 or 2 per cent. of aluminium without any noticeable effect in the making of castings; it is not the presence of the aluminium, but the act of adding it at a certain moment, that produces the effect."

Mr. Osmond has definitely settled this question of the melting point of aluminium-iron alloys by determining the fusing point of an alloy with 5 per cent. of aluminium. This he found to be only 25° below that of the pure iron, so that the effect on the melting point is really inappreciable.

Mr. R. W. Davenport offers the following explanation: A rise of the temperature of the metal would explain the phenomena as satisfactorily as a fall in the melting point. Since the aluminium oxidizes and passes into the slag, probably according to the reaction,

$$2Al + 6FeO = 3FeO.Al_2O_3 + 3Fe,$$

the high calorific power of the aluminium would supply a considerable quantity of heat, in spite of its small amount. Mr. Davenport then assumes the calorific power of aluminium as 10,000, leaves out of consideration the heat absorbed by the reduction of FeO to Fe and the union of FeO with Al_2O_3 to form the aluminate, and from this calculates that the oxidation of 0.06 per cent. of aluminium would produce 640 calories of heat and raise the temperature of the bath about 40°. He further implies that a rise of 120° would thus call for the oxidation of only 0.18 per cent. of aluminium, which might easily have been added to Mr. Ostberg's castings.

This explanation is as untenable as Mr. Ostberg's, for the following reasons: 1. The calorific power of aluminium burning to alumina is very nearly 7500*; when producing hydrated alumina (the datum usually given in the tables) it is only 100 higher. 2. The heat required to reduce ferrous oxide is pretty accurately known, and there is no reason why this should not be taken into account. 3. The heat of combination of ferrous oxide and alumina is certainly not known, though probably quite small; but on inspecting slag from mitis metal, white patches or flakes of alumina are to be seen in it, showing that some of the aluminium, if not the greater part, escapes as

* Ann. de Chim. et de Phys., June, 1889, p. 250.

alumina uncombined. It would be erring on the safe side to leave this quantity out of consideration altogether. 4. As the ferro-aluminium is thrown into the crucible cold, the melting of it will very nearly absorb as much heat as is developed by its chemical reactions. Reconstructing the formula with these points in view we have—

	Heat developed.	Heat absorbed.
Oxidation of aluminium		
0.06×7250	= 435	—
Reduction of ferrous oxide		
$0.24 \times \frac{7}{9} \times 1286$	= —	240
Melting of ferro-aluminium		
1.00×200 (Gruner)	= —	200
	435	440

Making all reasonable allowances, the increase of heat due to the addition of the alloy will be too small to be noticeable. I might say, finally, that if the charge were left in the crucible untreated, and heated one or two hundred degrees hotter than the temperature at which the charges usually receive their ferro-aluminium, the wrought-iron would not flow with anything like the fluidity shown by mitis metal. It is probably safe to say that wrought-iron untreated could not, at any practicable temperature, be made as fluid as the aluminium-treated metal.

What then will explain the increased fluidity? The author asks a consideration of the following facts: Every metal melter who has tried to run down wrought scraps of any metal, zinc, copper, tin, etc., knows how the melt will become pasty, and in many cases resist every effort to run it together. Now zinc is zinc, and its melting point is somewhere about 420°, and yet the surface of the scrap metal will keep together while the interior is quite fluid. This is particularly noticeable with copper. It appears that the previous working has driven particles of foreign matter, particularly oxide, into the pores of the metal, and this less fusible skin keeps the melted particles from coming in contact and running together. Again, it is noticeable with many metals that the absorption or solution of a minute quantity of

its oxide tends to make the metal pasty. Let any one blow air for a very short time through perfectly fluid zinc, and in an incredibly short space the metal will thicken up, and an amount of mush out of all proportion to the amount of oxide which could have been formed, will float on the surface. It can also be noticed that on heating up this mushy metal again it passes out of the solid state at nearly the same temperature as pure zinc; but instead of becoming fluid it remains pasty for many degrees' rise of temperature above that point. The case of wrought-iron appears to me to be similar to those just noted. When wrought-iron scrap is heated it becomes soft at a moderately high temperature, but on heating it further to get it to form a homogeneous bath the hard, wrought surface is a great hinderance to its running together; a very high temperature causes the separate pieces to unite imperfectly into one body, but because of the scale and oxide present from the first, together with that formed during heating, the fusion is thick and viscid. Here the second phenomenon pointed out above can be noticed. This metal, because of the oxide in it, requires a higher temperature to make it fluid than if the oxide were not there. What follows then? Remove the oxide by some means, and the bath becomes perfectly fluid, and is superheated with respect to its *proper* melting point, *i. e.*, the melting point of the metal uncontaminated with oxide. The aluminium added does this work, reduces the oxide to metallic iron, the infusible and unalterable alumina produced rises to the surface, and the bath attains its extraordinary fluidity for the reason just given.

With regard to the lessening of blow-holes, we will first note their cause. First, they are not shrinkage cavities, which are caused by the metal chilling too quickly after pouring in the mould, and the sink-head not remaining fluid long enough to feed the cavities made in the body of the casting as it cools. The metal which is most liquid and least likely to chill quickly will produce the least number of unfilled shrinkage cavities, and these advantages are possessed by the wrought-iron when converted into mitis metal. But, in considering blow-holes proper,

we note three distinct causes for them in wrought-iron castings.

1. When molten metal is poured into a mould prepared with the greatest care there is always some ebullition caused by the expulsion of moisture from the mould or moulding material. This boiling will continue as long as the metal is fluid enough to allow the vapor to escape, but as soon as it stops escaping, there will be some gas entangled in the solidifying metal, producing cavities. The gas thus entrapped is principally hydrogen with some oxygen, most of the oxygen being caught by the metal and forming a lining of oxide inside the cavity.

2. When a stream of liquid, molten metal or water, is poured, it draws with it into the bath a considerable quantity of air. Every one who has poured water from a pitcher into a goblet has had opportunity to see this phenomenon, which occurs just as certainly and perhaps to a still greater degree when molten metal falls six or eight inches through the air and down a pouring gate. Such an arrangement is an actual suction apparatus. The gas thus drawn into the metal will be principally air with whatever proportion of moisture it contains. This gas escapes as long as the metal remains fluid enough, but will be largely entangled in the solidifying metal.

3. Metals possess the property of dissolving or occluding gases while molten, just as water dissolves air. They can retain some gas even when solid, but when they melt their dissolving power is largely increased. It results from this, that if iron is kept molten for some time it will be able to dissolve a certain quantity of gas. As it cools toward its setting point its dissolving power may increase or decrease, I cannot say which; but it is certain that when very near to its setting point it suddenly loses this power of solution, and considerable quantities of gas are evolved. The corresponding phenomenon in aluminium is very marked and quite easy to observe (see p. 57). The gas being set free near to the setting point, much of it is entangled in the casting.

4. In castings made of cast-iron there is another cause of

blow-holes; viz., the carbonic oxide produced by the carbon present reducing oxides; but since carbon is very low in mitis castings and the dissolved oxides are otherwise removed, this cause need scarcely be taken into account.

Reviewing the causes of blow-holes, we note that the first two will occur in casting any kind of metal, but that kind which is most fluid in the mould and remains fluid the longest time will permit most gases to escape and so set with the smallest number of blow-holes. The superiority of aluminium-treated metal in these requirements gives it great advantages over these causes of blow-holes. For the same reason, when the third cause is considered, fluidity of mitis metal down almost to its melting point, with a small range during which it is pasty, allows more of the dissolved gas to escape when once set at liberty. In the author's opinion, the increased fluidity of mitis metal and the closer definition of its melting point, are the chief causes of the comparative freedom of the castings from blow-holes. However, the point has been raised by Mr. Howe, that perhaps the aluminium imparts to the iron greater power of holding gases in solution, not directly by alloying with it, since none remains in the iron, but indirectly by removing the oxygen. In one of Mr. Davenport's experiments, wrought-iron was melted alone in a crucible, and while oxygenated and boiling gently, 1 per cent. of ferro-aluminium was added, introducing 0.04 per cent. of aluminium and 0.1 per cent. of silicon. It appeared to lessen the evolution of gas, and in 2½ minutes the iron was perfectly still, and when poured three minutes later lay quiet in the mould like cast-iron. In all of Davenport's experiments with molten iron, the addition of aluminium seemed to check the evolution of gas. We cannot say that Mr. Howe's suggestion is impossible, yet it is very improbable, because one of the laws of solution of gases in liquids is that when a liquid has dissolved as much of one gas as it is able, it will yet take up as much of another gas as if the first were not present.* If then, we have the case of solution of gases in

* Deschanel's Natural Philosophy, pp. 182, 183.

molten iron, the removal of one gas would not affect the amount of any other gas which the iron might take into solution. When wrought iron is boiling the cause is that carbon present (perhaps that still left in the metal, but more probably the graphite of the plumbago crucible) is reducing the dissolved ferrous oxide and forming carbonic oxide. To explain the action of the aluminium in stopping this ebullition, it is not necessary to suppose that it gives the iron increased power of retaining in solution the gases which are escaping (Howe's explanation), nor yet that it reduces the carbonic oxide gas as it forms, which reaction might take place,* but simply that it reduces all the dissolved ferrous oxide at once, and so leaves no available oxygen in the bath for the carbon to combine with. With regard to any carbonic oxide which might be held dissolved in the iron, and by being evolved near the setting point form blow-holes, it is quite probable that the aluminium takes the oxygen away from it also, and so lessens chances of blow-holes from this cause. If such gases as hydrogen or nitrogen are dissolved in the molten iron, the greater fluidity of the bath will have no tendency to cause their evolution, the aluminium cannot influence them chemically, and it is altogether probable that they remain.

Professor LeVerrier has given a very satisfactory explanation of the fact that the hydrogen and nitrogen also cease to be evolved when the carbonic oxide stops being evolved. He cites the case of carbonated water, saturated with gas, which evolves nothing when quiet, but the agitation caused by blowing a very gentle current of air through it liberates large quantities of gas. Just so in steel. When the evolution of carbonic acid ceases, the bath is no longer kept agitated, and in consequence the other gases cease coming off also, producing a result apparently out of all proportion to the quantity of aluminium which produces it.

* Professor Arnold blew 40 gallons of pure carbonic oxide through a crucible of molten steel containing aluminium, and obtained an increase of 35 per cent. in the carbon present in the metal, proving that aluminium can take oxygen away from carbon.

The arguments just presented may be summed up as follows:

1. Treatment with aluminium makes the bath fluid because it removes the dissolved oxide which made it pasty.

2. Treating with aluminium stops the evolution of gas because—(*a*) It combines with all the oxygen present, and so removes the essential gaseous ingredient of the carbonic oxide which was being evolved; (*b*) the stopping of the formation of carbonic oxide allows the bath to remain quiet, and so the other gases are not agitated out of the solution.

3. Treating with aluminium also lessens blow-holes in castings, because the greater fluidity of the metal allows the easier escape of the gases mechanically entangled in it during casting.

Influence of Aluminium in Puddling Iron.

The Cowles Company state in one of their pamphlets that if a small percentage of aluminium is added to iron in the puddling furnace, the bath comes to nature quicker, and the wrought-iron produced is much stronger, equalling the best grades of mild steel.

An article in the "Iron Trade Review," September, 1887, stated that on adding 0.1 per cent. of aluminium to iron about to be puddled, the tensile strength was raised from 52,000 to 60,000 lbs. per square inch, an increase of 16 per cent., while the elongation was variously increased up to 20 per cent.

The only thoroughly reliable report on this subject is made by Mr. G. W. Thomson, a gentleman connected with the well-known firm, Messrs. P. & W. MacLellan, Glasgow. He took a charge of 373 lbs. of No. 4 forge pig-iron, charged it into the usual type of puddling-furnace, and when nearly melted threw in an ingot of ferro-aluminium, which weighed 13 lbs., contained 7.11 per cent. of aluminium, and so introduced 0.25 per cent. of aluminium into the bath. The operation of puddling then went on as usual, and with no noticeable change, except that when the charge was just getting pasty it suddenly swelled up considerably, slag flowed from it abundantly, and the charge

was very soon ready for balling. In the shingler and rolls the balls worked decidedly stiffer than usual. The result was very satisfactory. The ordinary iron averaged 22 tons tensile strength, with 12 per cent. elongation. The aluminium-treated iron showed 31 tons tensile strength and 22 per cent. elongation, being gains of 40 and 80 per cent. respectively. These bars stood the bending test perfectly, and when polished and cut showed a remarkably fine surface and close grain. They also forged satisfactorily.

If the above reports are to be relied on, this subject deserves looking into by every puddling-mill manager desirous of improving the quality of his iron.

Influence of Aluminium on Cast-Iron.

Very early in the history of aluminium, away back in 1858, the Tissier Bros. suggested the possibility of this application of aluminium by saying: "When aluminium has become low in price, it will be interesting to see what qualities it can communicate to cast-iron, introduced in large or small quantities." This suggestion does not appear to have led to any experiments in this line until after 1885, when the discovery and publication of the mitis process turned many experimenters toward the determination of the effect of aluminium on cast-iron. In April, 1886, Mr. Sellers, of Philadelphia, remarked at the Washington meeting of the National Academy of Science that he had made a series of experiments on the use of aluminium with iron in casting, with the result that the castings produced were very sharp and without any flaws. In December, 1887, the Williams Aluminium Company, of Boston, began the sale of an alloy called by them aluminium-ferro-silicon, which they recommended to founders for addition to cast-iron in the ladle, claiming increased fluidity of the iron and greater freedom from blow-holes. This company is now located in New York, with works in Newark, N. J., and manufactures and sells this alloy in tolerably large quantities. The claims of this company, as also of other companies selling ferro-aluminium

for foundry practice, are certainly very broad, but we will discuss in how far they are probably true. These claims are, in general, that the addition of aluminium—

1st. Makes the iron more fluid.
2nd. Makes hard iron softer.
3rd. Frees castings from hard spots and blow-holes.
4th. Lessens the tendency of the metal to chill.
5th. Increases the resistance of the iron to chemical action.

It is also stated that while good, soft iron is made more fluid and benefited to some degree, yet the advantages of treating with aluminium are most evident with poor, hard, white iron. We will review these claims in the light of those trustworthy experiments which have been made and certified to.

It is now generally conceded that the addition of ferro-aluminium does affect the quality of the castings. The method of adding it which has been generally adopted is to put some pieces of broken ferro-aluminium into the bottom of a ladle, preferably a hot one, and tap the iron from the cupola directly on to the alloy. In this way the maximum benefit is obtained. A German experimenter states* that it is important that the iron be not too hot when the ferro-aluminium is added, for if it is white-hot, the aluminium burns with a greenish flame and a peculiar smell; a golden-yellow heat is recommended as the right heat for treatment. If the ferro-aluminium is thrown into the molten iron at this heat, the streaks playing on the surface of the metal disappear, and the bath becomes blistery looking. The same writer states that, in general, white iron is undoubtedly improved by this treatment, but that gray iron is made porous, the pores showing particularly in the lower parts of castings.

While there have been many testimonials from practical men as to the benefits derived from the use of ferro-aluminium, testimonies so numerous that the fact of benefit has become indisputable, the only systematic investigation of this subject is that

* Zeitschrift des Vereins Deutscher Ingenieure, 1889, p. 301.

made by Mr. W. J. Keep, of the Michigan Stove Company, Detroit, with the co-operation of Prof. C. F. Maybery and L. D. Vorce. Their results are embodied in two quite lengthy papers, one read before the American Association for the Advancement of Science at their Cleveland meeting, August 17, 1888, the other published in the transactions of the American Institute of Mining Engineers, December, 1889. As we shall quote many of the results given in these papers, we will first explain the methods employed in pursuing the investigation.

Two kinds of iron were used, having the following composition:—

	White iron.		Gray iron.	
Silicon	0.186		1.249	
Phosphorus	0.263		0.084	
Sulphur	0.031		0.040	
Manganese	0.092		0.187	
Graphitic carbon		0.95		3.22
Combined "		2.03		0.33
Total "	2.980		3.550	

The ferro-aluminium used contained 11.42 per cent. of aluminium and 3.86 per cent of silicon. The melting was done in a covered plumbago crucible, and the melt was run into test-bars one foot long, some having a section ½ inch square, others 1 inch wide and $\frac{1}{10}$ inch thick. The ferro-aluminium was added to the molten iron, the smallest quantity first, and, after casting, part of this first cast was remelted with more ferro-aluminium, and so on. Another series of heats was made under exactly the same conditions but without adding aluminium, these tests serving for comparison and determination of the true effect of adding the ferro-aluminium. The general plan of the tests consisted in adding 0.25, 0.50, 0.75, and 1.00 per cent. of aluminium to the white iron and 0.25, 0.50, 0.75, 1, 2, 3, and 4 per cent. to the gray iron, the test-bars being carefully examined as to strength, shrinkage, etc., and comparison made with the corresponding remelt of the iron alone.

The weak point of the first set of tests, recorded in the first

paper, was the fact that many of the changes credited to the addition of the ferro-aluminium might probably have been accounted for by the silicon in the alloy added, and so the results could not be accepted as demonstrating the influence of the aluminium except where the change was in a direction contrary to that which the silicon could have produced. Mr. Keep recognized at once the necessity of differentiating the effect of these two elements, which was accomplished very ingeniously by finding an iron containing the same amounts of silicon, carbon, etc., as the ferro-aluminium, and making comparison tests with this iron in place of the aluminium alloy; also, by adding pure metallic aluminium to the iron. Taking the second paper in connection with the first, the conclusions advanced may be regarded as final and beyond reasonable doubt. Since Mr. Keep's method of presenting his results is in some cases not easily understood, I have, from an inspection of his diagrams, re-cast the results into tabular shape.

Solidity of castings.—All Mr. Keep's tests bore on this point, but one particular test was made with white iron, adding only 0.1 per cent. of aluminium (0.03 of silicon). The castings were of slightly finer grain, but blow-holes and interstitial cavities were noticeably absent, this accounting for the largely increased strength. The resistance to dead weight was increased 44 per cent., and to impact 6 per cent. No check test was made to eliminate the effect of the silicon added, but the effect produced was much greater than can with any probability be ascribed to the silicon alone.

Does the aluminium remain in the iron?—To determine this question, enough ferro-aluminium was added to white iron to introduce 0.25 per cent. of aluminium (0.08 of silicon), and the resulting metal was re-melted five times. Samples were taken of each melt, and found to contain at first addition 0.23 per cent. of aluminium, and at the successive re-meltings 0.20, 0.18, 0.15, 0.13 and 0.10 per cent. respectively. On comparison with white iron remelted alone the same number of times, the influence on the strength is also seen to endure through the re-meltings; for instance—

No. of re-melting.	Per cent. of aluminium.	Increase in Strength (per cent). Dead wt.	Impact.
	0.23	35	109
1	0.20	118	235
2	0.18	115	165
3	0.15	123	150
4	0.13	32	62
5	0.10	21	39

The analyses of Mr. Keep's other tests also answer the above question affirmatively, since, as before explained, the percentage of aluminium was increased gradually by adding ferro-aluminium to a previous melting, giving the aluminium several chances to escape if it tended to do so, before a large percentage was reached, but the calculated amounts agreed with those actually found as follows:—

Percentage by calculation.	Found on Analysis. White iron.	Gray iron.
0.25	0.25	0.10
0.50	0.54	0.14
0.75	0.89	0.32
1.00	1.28	0.75
2.00	—	1.50
3.00	—	2.23
4.00	—	3.84

There were, of course, unavoidable irregularities in the making of the tests, but the general conclusion from the above analyses is that all the aluminium remains in the white iron and almost all in the gray, the reason of the slight loss in the latter case not being apparent. On adding small amounts of aluminium to wrought-iron, none remains in the metal; the reason for the contrary phenomenon in the case of cast-iron is that the presence of carbon in large quantity prevents the presence of iron oxide dissolved in the iron, and the aluminium remains because there is no such oxidized compound present to slag it off.

Transverse strength.—The addition of aluminium as ferro-aluminium had the general effect of strengthening the iron, the

white iron showing the greater improvement, and the resistance to impact being increased more than the resistance to dead weight. The following table gives the percentage increase in strength in each case, the minus quantities in parentheses meaning decreased strength:—

Percentage of aluminium.	White Iron.		Gray Iron.	
	Dead wt.	Impact.	Dead wt.	Impact.
0.25	32.5	82.8	—(12.5)	—(15.5)
0.50	128.0	291.0	—(8.9)	44.0
0.75	113.6	240.0	5.8	23.0
1.00	117.6	350.0	2.4	30.0
2.00	——	——	—(10.4)	29.0
3.00	——	——	4.6	11.0
4.00	——	——	15.8	130.0

Since, for every 1 per cent. of aluminium added, 0.34 of silicon was contained in the ferro-aluminium, the question very naturally occurred, how much of this benefit was due to silicon. Tests were therefore made on this point, proving the part taken by the aluminium. The figures show the percentage increase in strength, as in the former tables.

Addition.	White Iron.	
	Dead wt.	Impact.
1 per cent. aluminium in ferro-aluminium.....	117.6	350.0
Cast-iron, introducing the same quantity of silicon.	126.8	94.6
1 per cent. of aluminium as pure aluminium.....	141.7	156.5

The conclusions to be drawn are, therefore, that while the silicon in the ferro-aluminium is sufficient to explain the increased resistance to a dead weight, yet the increase in resistance to impact is clearly due in large part to the aluminium.

Elasticity.—The closing of the grain of the iron on treatment with ferro-aluminium caused the iron to be less brittle, or more elastic. The deflection of the different specimens for a fixed weight was measured, and the increase in deflection was found to be (in percentages)—

Percentage of aluminium.	White iron.	Gray iron.
0.25	31	125
0.50	89	116
0.75	100	147
1.00	153	133
2.00	——	133
3.00	——	194
4.00	——	193

To distinguish the effect due to the silicon added, tests made with silicon and aluminium alone showed increased deflections as follows:

Addition.	White-iron.
1 per cent. of aluminium in ferro aluminium	153
Cast-iron containing an equal quantity of silicon	11
1 per cent. of aluminium as pure aluminium	100

It is thus proved that the increased elasticity is due to the aluminium, caused, as Mr. Keep believes, by a very uniform distribution of the graphitic carbon when aluminium is the element precipitating it, a phenomenon to be examined further on.

Effect on the grain.—Mr. Keep found that the addition of ferro-aluminium made the grain of the iron decidedly darker, caused by the separation of more carbon as graphite. It is well-known that silicon acts in the same direction, but Keep's first impressions were that the separation of graphite took place much nearer to the setting point of the iron than he had ever observed to result from silicon acting alone. A check test, adding cast-iron without aluminium, confirmed this impression; for instance,

Addition.	White-iron. (Description of fracture.)
——	White.
0.25 per cent. aluminium as ferro-aluminium	A few gray specks.
0.50 " " " "	Light gray.
0.75 " " " "	Gray.
1.00 " " " "	Dark gray.
Cast-iron containing an equal quantity of silicon to preceding	White—a few gray specks.
1.00 per cent. aluminium as pure aluminium	Dark gray.

The comparisons made show that aluminium is undoubtedly

active in changing combined into graphitic carbon; from a comparison of the analyses of the above tests it appears that it is even more powerful than silicon in accomplishing this result, since 0.25 per cent. of aluminium (with 0.20 per cent. of silicon) seems to give a fracture identical with that produced by 0.62 per cent. of silicon alone.

Mr. Keep notices that the separation of the graphite seems to take place instantaneously just as the iron is about to set, and not before, the result of which is that there is very little opportunity for any gathering together of the graphite into soft spots in the casting, and also that no matter how quickly the iron sets, the graphite will be mostly separated out, and thus the iron chills less. This effect is very noticeable in gray-iron, where the first addition of 0.25 per cent. aluminium as ferro-aluminium decreased the depth of chill fully one-half and slightly darkened the fracture; subsequent additions of two, three and four times as much reduced the chill to nearly nothing; while with 2 per cent. of aluminium added, the drop of the graphite was so nearly instantaneous that no chill was visible.

Fluidity of the iron.—The general conclusion from Mr. Keep's tests is that, with white-iron, small additions of aluminium, such as would be used in ordinary foundry practice, increase slightly the fluidity; one-half per cent. of aluminium and over decreases the fluidity. Gray-iron is rendered decidedly less fluid by any addition of aluminium. Mr. Keep notices a peculiarity of cast-iron containing aluminium which is similar to that we have remarked in pure aluminium (p. 446); viz., that as the metal flows it seem to have a skin in front of it, causing it to run with a very thick edge, and if two currents of this iron come together in a mould, they are apt not to unite, but to simply chill without union.

Shrinkage.—Mr. Keep measured carefully the shrinkage of the different specimens of aluminized cast-iron. The general conclusion was that aluminium reduces the shrinkage if enough of it is added. The following table shows the reduction in the shrinkage, in percentage of the original shrinkage, under the different conditions—

Percentage of aluminium.	Reduction of shrinkage (per cent.)			
	White-iron.		Gray-iron.	
	Square bar.	Thin bar.	Square bar.	Thin bar.
0.25	—(4)	—(4)	0	14
0.50	0	—(4)	—(3)	4
0.75	16	—(4)	4	14
1.00	21	—(4)	9	16
2.00	—	—	19	16
3,00	—	—	34	16
4.00	—	—	28	26

It will be noticed that, particularly with the square bar, the first two additions of aluminium have very little effect either way, but that with subsequent additions the amount of shrinkage is reduced 5 to 30 per cent. Mr. Keep thinks that this behavior is dependent on the action of the carbon; that the small amounts of aluminium are chiefly active in closing blowholes and giving soundness to the casting, but the larger amounts have a noticeable influence on changing combined carbon into graphite, and that the increased deposition of graphite just as the metal sets increases its volume and decreases the amount of shrinkage.

Hardness.—The indications from Mr. Keep's tests are that aluminium of itself hardens cast-iron, but, by its influence in changing combined carbon into graphite, it indirectly renders the iron softer. It is noticeable that if an iron cast with soft spots, the parts in between being hard, that the addition of aluminium caused the graphite to be dropped so near to the setting point that it had no opportunity to collect into spots, and was therefore uniformly distributed, rendering the iron uniformly softer.

Aside from the above determinations, many testimonials could be quoted from practical iron founders as to the practical benefit to poor iron gained by adding ferro-aluminium. Perhaps one of the most striking results is the increased time which the aluminium-treated iron will remain molten. For instance, Mr. Keep found that 0.02 per cent. of aluminium added to a ladle of iron caused it to keep fluid 5 minutes, while a simi-

lar ladleful of the same metal without aluminium became solid in 2½ minutes. This property of keeping fluid longer is of direct usefulness in a foundry where it is necessary to run a large number of small castings, during which operation there is usually much trouble experienced in keeping the iron fluid, unless it was very hot to start with. I am quite assured of the fact that the addition of a very small amount of aluminium does have the effect described above. A friend of the author described an experiment in which a large ladleful of iron was tapped from a cupola and taken for pouring about 200 yards, partly through the open air. The iron was not hot enough to fill the moulds satisfactorily. Another ladleful, similar in all respects, was tapped immediately after, some ferro-aluminium being placed in the ladle. This iron was taken to the same place for casting, filled the moulds perfectly, and when brought back to the cupola the metal left in the ladle was still fluid enough to make good castings. I have heard similar reports from trustworthy sources, all stating that the judicious use of a small quantity of ferro-aluminium will result in nearly doubling the time during which a bath of iron will stay fluid enough to make castings.

The practical results observed by the foundrymen are that they obtain cleaner, more solid, softer castings, with a large reduction in the percentage of defective castings. Mr. Adamson, President of the British Iron and Steel Institute, says that "since using ferro-aluminium in my foundry, 80 per cent. of the the waste has been saved, and all the work manufactured is improved in quality." The general testimony seems to be that the castings come out of the sand cleaner, are much more free from blow-holes, work more uniformly in the lathe or planer because of the absence of hard or soft spots, come up sharper in the mould, and are generally stronger. There is not much improvement made on good gray foundry iron, in which case it is best to leave the good iron to itself; but when the quality of the iron is low, and difficulty met in getting good castings, then ferro-aluminium is of undoubted benefit. Very small

additions are relatively of greatest effect; Mr. Keep has stated that with only 0.00067 per cent. of aluminium added to a poor quality iron it could be observed that the blow-holes were lessened and the transverse strength noticeably increased. It is probable that the first one-hundredth of a per cent. of aluminium added has more effect than the next five-hundredths; and it is fortunate that this is so, for it opens up an extremely large field for the use of aluminium alloys.

The *rationale* of the action of aluminium on cast-iron may be said to be an open question. That 0.25 to 0.50 per cent. begins to affect the carbon has been proven by Mr. Keep, yet these are quantities which are not used in ordinary foundry practice, where 0.10 per cent. may be taken as the maximum amount which the founder can afford to use, while 0.01 to 0.05 per cent. may be said to be the usual additions. It would appear to me that such small proportions of aluminium can only exert the effects attributed to them by (expressing it figuratively) holding a sort of balance of power, by which it determines a much greater result than the aluminium alone could possibly bring about. This idea is alluded to by Mr. Keep when he says that to use ferro-aluminium to best advantage the cast-irons should be mixed so as to get mixtures most suitable for treatment, or in other words, to get an iron more sensitive to the aluminium. What the conditions are which render an iron sensitive to the action of the aluminium has not been definitely determined. We might infer that since it acts in many respects similarly to silicon, the less the amount of silicon present the larger the scope of the aluminium, that is, the more room it has to act. Or, similarly, the more combined and less graphitic carbon present, the more opportunity is given the aluminium to benefit the iron. But, why the aluminium-treated iron should stay fluid so much longer, we cannot see. This seems to be one of those effects out of proportion to the quantity of aluminium present. For the present, we will rest the case here; practically, very small additions of ferro-aluminium can be made very advantageous; theoretically, we have, as yet, no satisfactory explanation of the facts observed.

CHAPTER XVII.

ANALYSIS OF ALUMINIUM AND ALUMINIUM ALLOYS.

COMMERCIAL aluminium may contain the following elements besides aluminium: Silicon, iron, lead, tin, zinc, copper, silver, carbon, sodium, chlorine, fluorine. The method of attack generally preferred is solution in pure caustic soda. Hydrochloric acid usually attacks aluminium very energetically, and more easily the larger the percentage of silicon it carries, for the purest aluminium is not attacked very violently. When much silicon is present, the odor of silicuretted hydrogen is plainly perceptible during the action of the acid, thus indicating some loss of silicon. In dissolving in caustic soda this loss does not take place. Solution in bromine or iodine solution also offers similar advantages as respects avoiding loss of silicon. When analyzing particularly for carbon, the solvent used in the determination of carbon in iron may be appropriately used. We will consider these more in detail further on.

A qualitative test may very appropriately precede the analysis, and will often save much time in the quantitative determinations. These qualitative tests may generally be made on the same lines as the others; though in some cases shorter methods are practicable. Thus, after solution in hydrochloric acid, neutralizing with and adding excess of ammonia will show the presence of copper. If the solution is made hot, a spot of sulphuric acid will show whether lead is present. Iron may be detected by potassium ferro-cyanide. Silver will remain as a white residue after the action of the acid. Chlorine is detected most easily by Berzelius' blow-pipe test with oxide of copper. Lead and zinc can be detected to a certain extent before the blow-pipe. A specimen of aluminium which gave an unmis-

takable test for lead on charcoal before the blow-pipe, was found on subsequent analysis to contain nearly 7 per cent. of that metal. It appeared as though a much smaller proportion could have been thus detected. Another specimen similarly treated gave a good test for zinc, and the quantitative analysis gave 6.25 per cent. of that metal. Smaller amounts than this could probably be easily detected. On the other hand, however, it is not probable that the presence of tin would make itself evident in the charcoal test; for aluminium seems to protect the tin very strongly from oxidation. An alloy known to contain 90 parts of tin to 10 of aluminium was tested on charcoal, and would not, with the hottest flame at my command, give the usual white coat indicating tin. Such being the case, it appears highly improbable that aluminium containing a small percentage of tin would give the test in question. The better test would be the white residue left on solution in hot, concentrated nitric acid. The presence of iron or copper, or of both together, can usually be immediately recognized by dissolving a small piece of the aluminium in a borax bead, on a platinum wire, in the oxidizing flame. Copper thus detected by the author was found on analysis to be less than 1 per cent. of the weight of the aluminium tested. The presence of sodium is generally shown by the metal decomposing water heated nearly to boiling, setting free hydrogen. This test can be easily made in a test-tube.

The specific gravity of the metal, accurately taken, furnishes some intimation as to the presence of any of the heavy metals in any considerable quantity. Thus, 5 per cent. of silver increased the specific gravity from 2.65 to 2.8; 6 per cent. of lead from 2.75 to 2.9. This test is not, however, of much value, since, because of the very low specific gravity of aluminium, small amounts of heavy metals have only a small influence in increasing it, while silicon, an impurity most likely to be present, is lighter than aluminium (specific gravity 2.35), and therefore neutralizes to some extent the effect of the heavy metals. However, in commercially pure aluminium, containing

only iron and silicon, the specific gravity can be made useful in indicating the amount of iron present within rather wide limits —say within 1 per cent.

Another test of somewhat similar utility would be that given by Fr. Schulze.* He proposes to dissolve the aluminium in caustic alkali and measure the volume of hydrogen set free. If the metal contains no zinc, this volume will be approximately proportional to the amount of aluminium in the metal. Thus, ½ gramme of one specimen gave 648 cubic centimeters of hydrogen; a similar weight of another, 580 cubic centimetres. These figures are then taken as expressing the relative purity of the two samples. In an aluminium works where a quick, approximately accurate test is needed, which can be made, if need be, by a person not necessarily a skilful chemist, and which is applied to testing samples of nearly the same composition, this test would appear to be of practical utility.

Determination of silicon.—Deville recommended the following method: "Dissolve in pure hydrochloric acid and evaporate to dryness in a platinum dish. The evaporation to dryness is indispensable in order to render insoluble the quite important quantity of silica which is kept in solution by the presence of the acid. There remains an insoluble residue consisting of silicon, silicon protoxide and silica, which is washed by decantation with hot water and thrown on to a filter. This mixture of siliceous material is then calcined with the filter in a platinum dish at low temperature. A little flame may often be seen coming from different parts of the mass, caused by the production (at the expense of the silicon protoxide) of a little silicon hydride, according to the reaction—

$$3SiO + 2H_2O = SiH_4 + 3SiO_2$$

causing a slight loss of silicon. This may be altogether avoided by moistening the material with ammonia before calcining. The residue after ignition is a mixture of silicon and silica, the

* Wagner's Jahresbericht, x. 23.

silicon protoxide having completely disappeared, and is carefully weighed. This done, it is put into a platinum crucible, and treated with a little dilute hydrofluoric acid, which dissolves the silica and leaves the silicon, which is washed with care. This residue is then dried and weighed, and by subtracting from the former weight, the weight of silica is known with which it was mixed. This silica is calculated to silicon, and when the silicon weighed directly is added in, the result is the total weight of silicon in the metal tested."

The above method probably does determine with accuracy the amount of silicon which remains after solution of the aluminium, but Rammelsberg observed (see p. 56) that when aluminium contains considerable silicon there is always some silicon hydride formed during its solution in hydrochloric acid, which escapes and so causes error in the analyses. By passing the gases produced during solution through a solution of caustic potash. the silicon hydride was intercepted and the amount of silicon thus escaping was determined. It was found to be in two instances, 0.74 and 0.58 per cent., being 7 per cent. and 22 per cent respectively, of the total silicon in the metal (the first was very siliceous). It follows, therefore, that to make an accurate determination of the silicon in aluminium, hydrochloric acid cannot be used for attacking the metal unless care is taken to catch and determine the amount of silicon passing off as silicon hydride. Prof. Rammelsberg concluded from his study of the subject that silicon occurred in two forms in aluminium, a small amount free (like graphite in iron) the larger amount combined, and that on treatment with hydrochloric acid the free silicon remained as such, while the combined silicon partly escaped as silicon hydride and the rest was converted into silica. Such being the case, we can readily see the superiority of caustic potash or soda solution for dissolving the aluminium. Graphitoidal or crystalline silicon is dissolved by hot potash solution, the combined silicon will be dissolved, and if the nascent hydrogen forms for an instant any silicon hydride—as it does when acid is used—this gas is at once decomposed by the

alkali solution. The result is that if aluminium is attacked by hot potash solution, all the silicon present is oxidized and none lost. The solution of the aluminium should take place in a silver or platinum dish or crucible; a porcelain dish, however, is very slightly attacked, but glass should not be used. Care should be taken that the solution of caustic does not contain alumina or silica. After solution is complete, the liquor is filtered from any residue, hydrochloric acid is added until the reaction is acid, the bath evaporated to complete dryness until no smell of acid is perceptible, then moistened with a little hydrochloric acid to dissolve any alumina formed, water added and the whole brought to boiling. The silica is then filtered out, dried, ignited, weighed and calculated to silicon.

F. Regelsberger, chemist for the Aluminium Industrie Actien Gesellschaft, at Neuhausen, Switzerland, recommended using nitric acid to which was added one-fifth of its volume of hydrochloric acid. The oxidizing power of the nitric acid prevents any loss of silicon as silicon hydride, and solution of the aluminium takes place completely when the acid is warmed. This is the best and also the cheapest method of getting the aluminium into solution, and determining the total silicon. Mr. J. O. Handy, chemist of the Pittsburg Reduction Company, conducts the analysis as follows: * One gramme of turnings or drillings of the metal are dissolved in a mixture of 15 c.c. strong nitric acid and 2 c.c. concentrated hydrochloric acid. When the solution is nearly complete, add 2 c.c. more of the hydrochloric acid, and warm. When completely dissolved, add 20 c.c. of concentrated sulphuric acid, evaporate quickly on a hot plate until fumes of sulphuric anhydride appear, cool, add 75 c.c. of water and 10 c.c. of hydrochloric acid, stir well, boil for five minutes, and filter out the mixture of silicon and silica. Wash first with water, then with hot, dilute (30 per cent.) hydrochloric acid, and then with water, until free from acid. The filtrate may be used for determining aluminium, iron, etc. The silicon and silica are dried and fused with

* Journal of Applied and Analytical Chemistry, January, 1892.

about 3 grammes of sodium carbonate. After fusion, dissolve in hot water with hydrochloric acid, add 15 c.c. of concentrated sulphuric acid, evaporate to sulphuric fumes, cool, add 75 c.c. of water and 10 c.c. of hydrochloric acid, heat to boiling and filter. Wash with water, 30 per cent. hydrochloric acid, then with water, and weigh as silica. If it is desired to determine the graphitoidal silicon, another sample is dissolved in the same way, but the mixture of silicon and silica first obtained is filtered out upon platinum sponge in a platinum filter in a Grooch crucible, washed, dried at 80° C. and weighed. Then wash with hydrofluoric acid and sulphuric acid, thus dissolving away the silica, wash with hot water, dry again at 80° and weigh quickly the graphitoidal silicon. The loss in weight is, of course, the silica representing the combined silicon in the sample of metal.

Determination of iron (and aluminium).—Deville's method of procedure was as follows: "The metal is dissolved in pure hydrochloric acid, evaporated to complete dryness in a platinum dish, and the insoluble, siliceous materials filtered out. The solution is mixed with a large excess of nitric acid, evaporated in a porcelain dish covered by a glass, thus converting the bases into nitrates, which are then transferred to a platinum dish. Here the solution is evaporated to dryness and calcined lightly on the sand-bath, the dish being covered, until abundant vapors of nitric acid rise from all parts of the mass. Cool, and moisten with a solution of ammonium nitrate containing free ammonia. Heat until all odor of ammonia has disappeared, take up with water, and separate by decantation all soluble matter. (Decanting for greater precaution on to a filter.) The solution obtained contains all the sodium which was in the aluminium (see Determination of Sodium), while the insoluble residue is a mixture of aluminium and ferric oxide. This is heated to redness in the platinum dish which contains it, and transferred in whole or part into a tared platinum boat, where it is weighed. (It is best to make all these weighings with the boat inclosed in a glass tube closed by the flame at one end,

and at the other by a well-fitting cork. The tube and boat are then weighed together.) The boat is then placed inside a porcelain or platinum tube, heated up to redness, and a current of pure hydrogen passed over it. When the tube is bright-red, the hydrogen is replaced by hydrochloric acid gas, which transforms all the reduced iron into ferrous chloride without touching the alumina. At the end of the operation, when the tube is just below redness, the hydrochloric acid gas is replaced by hydrogen. When nearly cold, the boat is drawn out and weighed, the loss in weight being the ferric oxide removed, the portion still remaining being pure alumina. From these data the iron and aluminium are calculated. Very little trust can be placed on the alumina being perfectly white, to conclude that it is, therefore, free from iron; for experience has taught me that one may be very greatly deceived in making this conclusion. Experience will show about how long and at what heat the operation must be continued to remove all the iron; but to be absolutely certain, the operation should be repeated for a short time, when the alumina will remain constant in weight if it is perfectly pure."

The above operation is the most accurate method of determining iron and aluminium, and is more applicable to estimating small quantities of iron in aluminium rather than *vice versa*, since in the latter case the operation is much prolonged in reducing and volatilizing the iron compounds. The estimation of small amounts of aluminium in presence of a large quantity of iron generally calls for special methods of separation, which will be detailed under the analysis of aluminium-iron alloys. Confining ourselves here to the determination of iron in commercial aluminium, we may suggest the following modification of the above method. After solution in hydrochloric acid and separation of silica, the addition of a few drops of sulphuric acid will precipitate any lead which may be present, and then the iron and aluminium may be precipitated with ammonia in slight excess. Any copper present will remain in solution, and the precipitate may be washed well, filtered,

ignited, and weighed. Instead then of removing the ferric oxide by the method given by Deville, the method of H. Rose may be used, which consists in fusing the two oxides with caustic potash (by alcohol) or caustic soda (from sodium) in a silver crucible, when alkaline aluminate will be formed, and on boiling the mass with water and filtering, the alkaline fluid will contain the aluminium, while the residue will be ferric oxide containing some potash.

If a solution has been prepared containing only iron and aluminium (lead, zinc, copper, etc., having been separated out) many methods have been proposed for separating these two elements. The oldest method is to make the solution nearly neutral and then pour it gradually into excess of pure caustic potash or soda solution heated nearly to boiling in a platinum or silver dish. The iron is precipitated, while aluminium remains in solution. The details of this test can be found in any treatise on quantitative analysis. It is not to be relied on in many cases, especially for determining a small amount of aluminium in presence of much iron, since it is always probable that some aluminium is retained by the iron precipitate. Dissolving the iron hydroxide and reprecipitating will partially correct this. Solution of ordinary caustic soda is more apt than caustic potash to contain alumina, and so only the caustic soda made from sodium should be used. In either case the alkaline solution of potassium or sodium aluminate is heated nearly to boiling, and mixed with a large excess of ammonium chloride, when the alumina is entirely precipitated.

The method most frequently used to separate ferric oxide from alumina is to weigh the two oxides together, then dissolve in concentrated hydrochloric or sulphuric acid, reduce the solution by any suitable reducing agent (zinc, sulphurous acid gas, etc.), and determine the amount of iron present by titration with potassium permanganate or bichromate solution. These results are quite accurate if the proportion of aluminium is not small; when the latter is the case, as in ferro-aluminium, other methods give more satisfactory results, and are given further on in considering the analysis of ferro-aluminium.

The solution of the aluminium to be tested in caustic alkali offers the quickest method of separating out the iron, for the alkali dissolves out all the aluminium and leaves iron in the residue. The best way to conduct this method of analysis is to roll out the aluminium into a thin sheet, put in moderately concentrated alkali and allow it some time to dissolve. On filtering, the solution will contain all the aluminium while all the iron will remain, with various other metallic impurities, in the residue. This residue is then dissolved in acid and the iron easily determined in it without any interference from aluminium.

Determination of lead.—Dissolve the aluminium in hot hydrochloric acid, evaporate to dryness, moisten with hydrochloric acid, add hot water, and boil. Filter hot to separate out silica. To the hot, boiling solution add a few drops of sulphuric acid and let stand an hour. The precipitated lead sulphate can then be filtered out and weighed.

Determination of copper.—Proceed as in determining iron, when the copper will pass into the filtrate on precipitating iron and aluminium by excess of aqua ammonia. If any amount of copper is present this solution will be blue, especially when concentrated by evaporation. The solution may be evaporated to dryness, taken up with a little acid and the copper determined by any ordinary method; or, the ammoniacal copper solution may be acidified with sulphuric acid, crystals of oxalic acid added, the liquid boiled, and the copper thus deposited as oxalate. This is washed in boiling water, dried, calcined at a gentle heat, and weighed as cupric oxide. The ammoniacal copper solution might also be acidified with acetic acid and the copper precipitated by lead foil.

Determination of zinc.—Dissolve the aluminium in hydrochloric acid or in caustic alkali and separate out silica, taking up, however, with strong acetic acid. On passing sulphuretted hydrogen through the solution, zinc will be precipitated free from aluminium or iron. The precipitate of zinc sulphide is washed carefully with distilled water saturated with sulphuretted hydrogen, dried, calcined very carefully in a muffle and after-

wards very strongly over a blast lamp, and weighed as zinc oxide.

A very satisfactory separation is also obtained by nearly neutralizing the solution, adding a limited quantity of acetic acid and then sodium acetate, and thus precipitating the aluminium (and iron) as basic acetates, leaving the zinc in solution, from which it can be precipitated by a current of sulphuretted hydrogen.

Determination of tin.—Solution of the aluminium in hot nitric acid will leave the tin as insoluble meta-stannic acid. This residue is washed and treated with warm, dilute hydrochloric acid, which dissolves the tin compound and leaves the silica. The tin is then thrown down in the solution of stannic chloride by any of the ordinary methods of precipitation, preferably by sulphuretted hydrogen. The stannic sulphide is ignited gently, moistened with nitric acid, ignited more strongly, and the tin weighed as stannic oxide.

Determination of silver.—Dissolve the aluminium in weak aqua regia, dilute and filter out the siliceous residue, which will contain also all the silver as chloride. Wash carefully, and then dissolve out the silver salt with concentrated ammonia. On neutralizing the ammoniacal solution with nitric acid, the silver chloride is again precipitated, washed by decantation, dried at 250° to 300°, and weighed.

If the aluminium is attacked with caustic alkali, the silver will remain in the residue. This is washed, filtered, and treated on the filter with dilute nitric acid, which dissolves the silver. The solution of silver nitrate is precipitated by hydrochloric acid or sodium chloride, and the operation finished as before.

Determination of sodium.—In the first steps of the determination of iron, as given by Deville (p. 611), a solution was obtained free from iron and aluminium, and containing all the sodium which was in the aluminium tested. Deville describes the estimation of the sodium in this solution as follows: "To the solution is added a drop of ammonium oxalate, which sometimes precipitates a trace of calcium, indicative of the

presence of fluorspar in the slag with which the metal may be impregnated. After filtering (if necessary) evaporate to dryness in a weighed platinum dish, cover and heat to 200° or 300°, to decompose the ammonium nitrate. Nitrate of soda remains. This is moistened with water, and on it are placed several crystals of oxalic acid. Dry, calcine, and there remains sodium carbonate, which is often impregnated with a little carbon from the decomposition of the oxalate of soda. Dissolve the residue in water; if not clear, filter. Mix the solution with a little hydrochloric acid, evaporate to dryness, heat to 200°, and weigh as sodium chloride."

Commercial aluminium rarely contains metallic sodium, but when it does exist it can usually be detected from the fact that the amount of chlorine present is not sufficient to combine with the sodium found. The presence of fluorine would weaken this conclusion, but it is seldom present in any quantity.

Determination of chlorine.—Dissolve the aluminium in pure caustic soda, neutralize with nitric acid in very small excess, filter, and add several drops of nitrate of silver. The chloride of silver precipitated is washed well, dried at 300°, and weighed.

Determination of carbon.—Carbon occurs probably all as combined carbon. A large proportion of this carbon would necessarily escape on treating the aluminium with acids or alkalies, for the nascent hydrogen developed during solution would form volatile hydrocarbons with it. To obviate this, the ammonical solution of copper chloride should be used as a solvent, as in carbon determinations in iron. Solution in this, or, perhaps, in bromine, give a means of estimating the total carbon present. See Le Verrier's determinations on p. 57.

Detection of fluorine.—Deville recommends the following procedure: "Dissolve in caustic soda (using no more than is necessary), filter, and nearly neutralize with pure sulphuric acid. It is necessary to take care to leave a very small amount of free alkali without separating out any alumina, which falls at the moment when neutralization is complete. Evaporate the whole in a platinum crucible, and heat, covering with a watch-glass coated

with varnish through which regular lines have been traced with a copper point. A section of quartz prepared in the same way does still better. Vapor of water and hydrofluoric acid are disengaged on heating the crucible, and the latter etches the glass quite perceptibly. Sometimes, by breathing on the glass, the lines become more apparent.

Determination of Titanium.—Dissolve 2 grammes of the aluminium in caustic alkali solution, bring to boiling and filter quickly, washing repeatedly with boiling water. The residue contains all the iron and titanium. Dry and fuse with 8 grammes of potassium acid sulphate. After complete fusion, taking perhaps thirty minutes, dissolve in hot water and filter out the silica. To the solution add dilute ammonia until a slight percipitate forms, add dilute sulphuric acid until the precipitate just re-dissolves, then add 4 drops of concentrated sulphuric acid, dilute to 250 c. c., and saturate with sulphurous acid gas. Heat slowly to boiling and boil gently for 45 minutes, occasionally adding a little strong sulphurous-acid water. Filter out the precipitated titanic oxide, wash thoroughly with hot water, dry, ignite and weigh as TiO_2.

In the filtrate, the iron can be determined by oxidizing the solution, precipitating with ammonia, washing, re-dissolving in sulphuric acid and titrating with potassium permanganate. (Handy.)

Determination of Chromium.—This element is only present when intentionally introduced. The aluminium-chromium alloy is treated as for detecting titanium, when the chromium will remain in the residue with titanium, iron and silicon. This residue is put in a platinum crucible and treated with 1 c. c. of concentrated sulphuric acid and 5 c. c. of hydrofluoric acid. Evaporate to sulphuric fumes, then add 4 grammes of potassium acid sulphate and fuse, finishing the fusion over the blast lamp. Cool, add enough sodium carbonate to make the fusion alkaline, also some nitre, and fuse again. Take up in hot water and filter. Add some ammonium chloride, heat and filter out any alumina. Reduce the solution by sodium hyposulphite or

sulphurous-acid gas, and precipitate the chromium by ammonia. Re-dissolve the precipitate in hydrochloric acid and re-precipitate with ammonia, wash, dry, ignite and weigh as Cr_2O_3. (Handy.)

Analysis of Ferro-Aluminiums.

It is not intended to give directions for the complete analysis of ferro-aluminium. The determinations of silicon, carbon, sulphur, phosphorus, etc., are made the same as in steel or pig-iron. The only point offering special difficulty is the accurate determination of a small amount of aluminium in presence of a large amount of iron. For doing this, the ordinary methods do not give satisfactory results. Thus, when determining the iron volumetrically and the aluminium by difference, it is almost impossible to get concordant results. When separating by caustic alkali, the results in aluminium are too low, for the iron precipitate being so abundant, carries much aluminium down with it. Also, a large amount of caustic alkali must be used, and since it sometimes contains alumina, considerable error may thus be thus introduced.

Supposing that the alloy has been dissolved in acid, silica separated out and a solution containing only iron and aluminium obtained to work with, we will take up the various methods proposed to determine accurately the small amount of aluminium.

Mr. H. N. Yates analyzed several hundred specimens of ferro-aluminium, and found that the caustic alkali separation gives aluminium too low, and is unreliable; the method of weighing the two oxides together and afterwards determining the iron volumetrically with potassium bichromate gives pretty fair results with aluminium from 1 to 19 per cent.; but, with less than 1 per cent., as in steels, the most satisfactory results were obtained by the sodium thiosulphate separation. This latter is known as Chancel's separation, and is operated as follows: The solution is neutralized with sodium carbonate, made dilute, solution of sodium thiosulphate (hyposulphite) added, and the liquid boiled until no more sulphurous acid is disen-

gaged. All the alumina is precipitated as hydrate, with free sulphur, which may be washed, dried, ignited and weighed as alumina. The boiling until all sulphur smell is gone is a tedious operation, and the following modification is said to give equally accurate results: To the slightly acid solution, sodium thiosulphate is added more than equivalent to the amount of free acid present. The liquid is then boiled in a flask 10 to 15 minutes. The precipitated alumina is in a fine, granular state, easy to wash. The liquor is rapidly filtered, the precipitate washed with boiling water, dried, ignited and weighed.

A great disadvantage of the foregoing method is that any phosphoric acid present in the solution will be precipitated with the alumina. With certain iron alloys this would materially affect the result. To overcome this disadvantage, Mr. Peters suggested converting the alumina entirely into phosphate, still keeping the same method of separation from iron. The process, as modified, is as follows: If less than one gramme of iron is in the solution, it is diluted to 400 or 500 c.c. with cold water, and ammonia added until the solution is dark-red in color but contains no precipitate. Now add 3 c.c. of hydrochloric acid (sp. gr. 1.2), and 2 grammes of sodium phosphate, dissolved in water and filtered. Stir till the precipitate formed is re-dissolved and the solution is clear. Add now 10 grammes of sodium hyposulphite dissolved in water and 15 c.c. of acetic acid (sp. gr. 1.04), heat to boiling, boil 15 minutes, filter as rapidly as possible, wash with hot water, dry, ignite in a porcelain crucible raising the heat very carefully until all the carbon has burnt off, and weigh as $AlPO_4$ ($Al_2O_3.P_2O_5$).*

Mr. R. T. Thompson, an English chemist, stated that he found Chancel's separation ineffectual in determining aluminium in presence of large quantity of iron (probably mainly because of the phosphoric acid present), and devised the following method of separation: The iron is reduced to the ferrous state by a current of sulphurous acid gas, excess of this gas is

* The Chemical Analysis of Iron, A. A. Blair.

boiled off, and when cool, phosphoric acid or sodium or ammonium phosphate is added in excess of that required to precipitate all the alumina, then aqua ammonia until a faint permanent cloudiness is formed, finally excess of ammonium acetate. The precipitate generally contains a little iron, but on washing it, re-dissolving in acid and repeating the precipitation, it is obtained free from iron. The precipitate is dissolved in hydrochloric acid, a little nitric acid added, boiled, and nearly neutralized with caustic soda, and then boiled with an excess of the latter, The aluminium is precipitated as phosphate, is washed with a 1 per cent. solution of ammonium nitrate containing about 0.1 gramme of ammonium di-hydric phosphate per litre, and ignited and weighed as aluminium phosphate. *

A method of separation which has given the writer satisfactory results is the following: † To the cold, concentrated and slightly acid solution add an excess of solid sodium bi-carbonate in such quantity that after stirring a little remains undissolved and all the iron appears to be thrown down. Now add solution of potassium cyanide until the precipitate dissolves, then heat gently until the yellow color of potassium ferro-cyanide is produced. Add a few drops of caustic potash to the somewhat turbid solution until it is perfectly clear; then add excess of ammonium chloride and boil. Aluminium hydrate is precipitated free from iron, nickel or cobalt. As an analytical operation this method works very satisfactorily; care must be taken, however, in handling such large quantities of the very poisonous potassium cyanide.

It has been stated that if an excess of tri-methylamine is added to a dilute solution containing iron and aluminium, and let stand twenty-four hours, all the iron is precipitated and all the aluminium remains in solution.‡ The accuracy of this separation has not been thoroughly tested.

* Journal, Society of Chemical Industry, V, 152.

† Chemical News, March 29, 1888.

‡ Zeitschrift für Anal. Chemie, xxiv, part 5.

A. A. Blair recommends the determination of aluminium in iron and steel (when it occurs in very small amount) by the direct separation of ferric oxide from alumina, the method used being as follows: Dissolve the iron in strong hydrochloric acid, in a flask provided with a valve, thus keeping out air and allowing the iron to dissolve in the ferrous state. Neutralize with sodium carbonate, cool, dilute, add "milk" of barium carbonate, let stand several hours, the flask being meanwhile well stoppered, and filter. The precipitate consists of all the alumina, ferric oxide, chromic oxide, phosphoric acid or titanic acid mixed with the graphite and insoluble silica of the alloy. Wash well, treat with dilute hydrochloric acid, boil the solution with a slight excess of sulphuric acid, to precipitate the barium in the solution. Settle, filter, wash with hot water and concentrate the solution by evaporation. To separate the iron from the aluminium, add citric acid to the amount of five times the weight of oxides present, and excess of ammonia. If the solution does not stay clear, acidulate with hydrochloric acid, add more citric acid and excess of ammonia. Heat the clear solution to boiling and add fresh solution of ammonia sulphide until all the iron is precipitated. Let settle, wash with water containing ammonium sulphide. The iron sulphide can be dissolved in acid and the iron thrown down with ammonia. The solution can be acidified with hydrochloric acid, boiled, the sulphur filtered out, evaporated to dryness, ignited, the residue fused with sodium carbonate, dissolved in water, filtered, acidulated with hydrochloric acid and the alumina precipitated by ammonia. It would be quicker to take the solution containing iron and aluminium and divide it into two portions. In one part the iron and aluminium are thrown down together by ammonia and weighed as oxides; in the other the iron is separated as above. The last part may then be omitted and the aluminium found by difference. The imperfection of this method is the fact that the precipitate of alumina finally obtained contains any chromic oxide, titanic oxide or phosphoric acid that may be in the original solution. The first two ele-

ments may be seldom present, but some phosphorus is usually present, and the alumina will be too high for this reason. If the phosphoric acid is determined in this precipitate, this source of error may be eliminated. A more serious defect, however, is the fact that the iron is not completely precipitated, as may be proved by small flakes of iron sulphide being deposited if the solution is let stand several days, showing that the ammonium sulphide has the power of holding small quantities of iron in solution. The aluminium results are thus apt to be too high. Tartaric acid might be used instead of citric, but it is more liable to contain alumina, and so gives results too high in aluminium.

For separating large quantities of iron from small quantities of aluminium, the electrolytic method seems to be particularly applicable, for aluminium cannot be deposited from aqueous solution by the battery (except under exceptional conditions as alumina), while the iron can be totally deposited in a form easy to weigh. This method of separation is equal in accuracy to any of the preceding chemical methods, and is not difficult of application.

Dr. Classen gives the following method of procedure:* The solution may contain iron, cobalt, nickel, zinc, and aluminium. The solution of their sulphates is made very nearly neutral with ammonia and an excess of ammonium oxalate added, so that there are 2 or 3 grammes of this salt present to every 0.1 gramme of oxides. When the solution is not above 40° C. (its volume is best 150 to 200 c.c.) it is electrolyzed with a current not exceeding 10 or 12 c.c. of oxy-hydrogen gas per minute. If the current is stronger than this, alumina may be precipitated. If the amount of aluminium is not greater than that of the iron (and other metals), this method gives accurate results. The solution remaining is evaporated to dryness, heated gently to decompose the aluminium salts, and finally ignited strongly to alumina.

Prof. Edgar F. Smith gives an electrolytic method which for

* Quant. Chem. Analyse durch Electrölyse, p. 79.

accuracy leaves nothing to be desired.* The solution of the sulphates is made dilute, and about 10 per cent. of sodium citrate and a few drops of citric acid added to it. This is electrolyzed with a current of about 12 c.c. oxy-hydrogen gas per minute, using platinum electrodes. The deposit of iron is firm, and is washed successively with water, alcohol and ether, and weighed. If the iron and aluminium have been already determined together, the aluminium can be calculated by difference. If it is desired to weigh the aluminium directly, the citric acid solution must be evaporated to dryness, ignited to drive off organic matter, dissolved in acid, and the alumina precipitated by ammonia or ammonium sulphide.

Mr. John E. Stead of Middlesboro, England, has modified Chancel's separation as follows, with very satisfactory results:† The alumina is precipitated with sodium hyposulphite, thus separating it from the bulk of iron. The precipitate is dissolved on the filter in hot, dilute hydrochloric acid, and this solution evaporated to dryness in a platinum dish. When dry, pure caustic soda is put in, with a little water. After warming gently, more water is added, the whole boiled five minutes and filtered. The aluminium is precipitated in the filtrate by Peter's modification of Chancel's precipitation, and the aluminium thus weighed as phosphate, $AlPO_4$ (22.13 per cent. aluminium).

The advantage of Stead's method is that it gives three distinct separations from the iron, thus completely eliminating it from the final precipitate, while the addition of an excess of phosphate causes the aluminium to precipitate quicker and more completely. Comparisons of the different methods for determining small amounts of aluminium in iron have shown this to be superior in accuracy to any other method.

Analysis of Aluminium Bronzes.

The ingredients usually present are copper, aluminium, silicon, iron, and sometimes zinc, tin, nickel or lead. Solution in nitro-

* American Chemical Journal, 1888, p. 330.

† Journal Society of Chemical Industry, Dec. 31, 1889.

hydrochloric acid and evaporation to dryness will serve to separate out the silicon as silica. If dissolved in hot nitric acid, the tin remains in the residue as metastannic acid, which can be ignited along with any silica remaining and weighed as stannic oxide. The silica is left on treating this residue with hydrochloric or sulphuric acid, and its weight being subtracted from the previous weighing gives the net weight of stannic oxide. Lead would be precipitated from the nitric acid solution filtered out above by nearly neutralizing the solution and adding a few drops of sulphuric acid. The precipitated lead sulphate is filtered out and weighed. Copper may be precipitated free from zinc, iron or aluminium by evaporating the last filtrate nearly to dryness, to drive off nitric acid, acidulating with hydrochloric acid and precipitating with sulphuretted hydrogen. The precipitate of cupric sulphide may be mixed with sulphur and ignited in a Rose crucible in a current of hydrogen and weighed as cupric sulphide. Or, it may be dissolved in a few drops of nitric acid (the least possible quantity), a few centimetres of sulphuric acid added and the solution electrolyzed. The electrolysis of the solution can also be made directly in the presence of iron and aluminium by using a sulphuric acid solution with only two or three drops of free nitric acid present. The precipitation of copper by the battery is advisable in many respects, since the copper is simply removed from the solution without leaving any reagent behind it, and the other metals can be easily separated out of the solution remaining.

If the copper has been removed, either by sulphuretted hydrogen or by the battery, the solution contains only iron, aluminium, zinc, nickel or manganese. In the first case, it must be oxidized by a little nitric acid and the precipitated sulphur separated out. The metals remaining can be separated in several ways; the best, however, is to precipitate the iron and aluminium as basic acetates. To do this the solution is neutralized with carbonate of soda until a faint precipitate forms, which redissolves only after two or three minutes' stirring. Dilute, add about 4 per cent. of acetic acid and excess of sodium ace-

tate. Boil two or three minutes and then let the precipitate settle. Wash quickly with boiling water containing a little sodium acetate. The filtrate contains all the zinc, manganese, cobalt or nickel which were in the solution. The precipitate can be dissolved in dilute hydrochloric acid and the iron and aluminium separated by any of the methods already given, preferably Peter's modification of Chancel's separation. The filtrate may be evaporated to dryness, taken up with hydrochloric acid, sodium carbonate added till a permanent precipitate just forms, and then a drop or two of hydrochloric acid added to redissolve this precipitate. On passing sulphuretted hydrogen through the solution the zinc is precipitated as sulphide, while any manganese, nickel or cobalt present remain in solution. When all the zinc is precipitated, allow to stand twelve hours, filter, wash with sulphuretted hydrogen water, re-dissolve in hydrochloric acid and throw down the zinc as carbonate by sodium carbonate and ignite to oxide; or the zinc sulphide may be mixed with sulphur, put in a Rose crucible and ignited in a stream of hydrogen sulphide. It is in this case weighed as sulphide.

If the solution from which the zinc has been precipitated and filtered out be made strongly acid with acetic acid, and excess of sodium acetate added, sulphuretted hydrogen may be passed through again and will precipitate nickel or cobalt sulphides. These are filtered out and the filtrate concentrated, ammonium sulphide added to it, and then acetic acid. The remaining nickel and cobalt will be precipitated. The two precipitates are united and the nickel (and the cobalt if present) determined by any of the ordinary methods of precipitation. The filtrate is neutralized with ammonia, ammonium chloride added and let stand at least 24 hours in order to precipitate out the manganese as sulphide. Manganese might also be separated out of the filtrate from the basic acetate separation by adding hydrochloric acid and boiling with bromine water. The manganese is completely precipitated as dioxide.

If it is not wished to determine the copper, but only the alu-

minium present, the copper can be easily removed by adding a slight excess of ammonia to the hot hydrochloric acid solution. The solution is boiled a few minutes and filtered. The precipitate is apt to carry down and retain some copper. It is therefore necessary to re-dissolve it in acid and repeat the precipitation. All the iron and aluminium are thus obtained in the precipitate, along with manganese and possibly some zinc and nickel, if these are present. The precipitate can be dissolved in hydrochloric acid and the iron and aluminium precipitated alone by a basic acetate separation.

Aluminium-Zinc Alloy.

The writer has several times had occasion to search for minute quantities of aluminium in zinc. The method which gave complete satisfaction was as follows: Dissolve in nitric acid, and separate out tin. Add sulphuric acid and separate out lead. Make a basic acetate precipitation, and filter out the precipitated iron and aluminium. Dissolve in hydrochloric acid, and precipitate the alumina with sodium hyposulphite, preferably adding sodium phosphate if the latter reagent on hand is free from alumina. Using a large quantity of zinc for the analysis, two analyses gave 0.004 and 0.005 per cent. of aluminium respectively, while a blank analysis to correct for alumina coming from the reagents used gave absolutely nothing.

General Remarks.

In analyzing aluminium-tin alloys, hot nitric acid will dissolve the aluminium and leave the tin as meta-stannic acid. Aluminium-silver alloys may be attacked by caustic alkali, leaving silver undissolved in the residue, or may be dissolved in hot nitric acid, nearly neutralized and the silver precipitated by hydrochloric acid or sodium chloride. Alloys of aluminium with either zinc, nickel or manganese are best analyzed by bringing the alloy into solution and separating aluminium from the other metal by a basic acetate precipitation. Aluminium-lead alloys may be dissolved in hot nitric acid and the lead

precipitated by sulphuric acid after nearly neutralizing the solution and adding alcohol to it.

I would recommend that some qualitative tests such as are suggested in the beginning of this chapter—blow-pipe tests, wet tests, etc.—be always made preparatory to the quantitative analysis; and then, knowing what is present and which elements it is desired to estimate and which to neglect, the method of attack and analysis should be decided on. Half an hour spent in making qualitative tests and ten minutes in reflection as to the best method of analysis to adopt, will often save several hours of unnecessary work, and frequently prevent the exasperating necessity of having to stop an analysis and start over again.

INDEX.

ACETYLENE, heat absorbed in the formation of, 241
pure, cost of, 242
theoretical temperature at which alumina should be reduced by, 241
Acid element, action of aluminium as an, 99
hydrochloric, action of, on aluminium, 91, 92
nitric, action of, on aluminium, 90, 91
resistance of aluminium to, 488
sulphuric, action of, on aluminium, 88–90
Acids, organic, action of, on aluminium, 92–97
Adamson, Mr., on the use of ferro-aluminium, 604
Air, action of, on aluminium, 83–85
-ships, use of aluminium in, 478
Alabama, deposits of bauxite in, 41
kaolin in, 49
Alkali Reduction Syndicate, Limited, 32
Alkalies, caustic, action of, on aluminium, 99, 100
double carbonate of aluminium and the, 131
Alkaline carbonates, reaction of, on neutral solutions of aluminium salts, 111
chlorides, solutions of, action of aluminium on, 102
metals, reduction of, theoretically considered, 237
sulphates and carbonates, action of, on aluminium, 104
Allegheny river, aluminium works on the, 382
Alliance Aluminium Co., London, England, 31, 32
cost of aluminium to the, 294
plant of, 291
Alloy, carboniferous, of aluminium, 403
Alloy, light, elastic, of aluminium, 538
Miller's anti-friction, 504
Alloys, aluminium, 492–533
analysis of, 606–627
aluminium-antimony, 495, 496
-arsenic, 497
-bismuth, 497
-boron, 497, 498
-cadmium, 498
-calcium, 498, 499
-chromium, 499, 500
-cobalt, 500
-copper, 534–571
general properties of, 534–536
groups of, 534
melting points of, 534–536
-gallium, 500, 501
-gold, 501–503
groups of, 493
-iron, 572–605
-lead, 503, 504
-magnesium, 504, 505
-manganese, 505, 506
analysis of, 626
-mercury, 506–509
-molybdenum, 509, 510
-nickel, 510, 511
analysis of, 626
-copper, 511–516
-phosphorus, 516, 517
-platinum, 517
practical production of, 492
-selenium, 519
-silicon, 517–519
-silver, 519–521
analysis of, 626
-sodium, 521
specific gravity of, 494
-tellurium, 521, 522
-tin, 522–525
analysis of, 626
-titanium, 525–527
-tungsten, 527
-zinc, 528–530
analysis of, 626
-copper, 530–533

Alloys, for soldering aluminium, 461, 462, 464, 465
iron-aluminium, Brin Bros'. process of preparing, 425
Cleaver's patent for producing, 424, 425
Faraday and Stodart's investigations on, 422, 423
preparation of, by an aluminium company in Kentucky, 425, 426
by the Aluminium Process Co., 426, 427
ready-made, decline of the sale of, 31
Almeta polish, composition of, 456
Alsite Aluminium Solder, 467
Alum and vitriols, separation of, 2
calcined, 128
discovery of process of obtaining, 2
ignition of, with carbon, 403
investigations on the base of, 2
native, analysis of, 50, 51
Alumen, account of, by Pliny and Columella, 1
derivation of the term, 1
Roccæ, 1
Alumina, 112
action of carbon-bisulphide on 244
addition of, in the manufacture of cast steel, 423
amorphous in aluminium, 59
amount of metal extracted from, by the Hall process, 379
Billing's experiment on reducing, in contact with iron, 424
change of, into its chloride, 242
conditions required for the reduction of, 238
cost of calcination of, 379
in Pittsburg, 379
data for the decomposition of, 239
Davy's experiment to decompose, 319
decomposition of, by the electric current, 5
effect of, on steel, 577
electro-motive force required to decompose, 302
equation for the temperature at which hydrogen gas will begin to reduce, 240
Alumina, equation for the voltage required to decompose, 239
formula for finding the temperature at which reduction of, by carbonic oxide begins, 240
the heat required to decompose, 239
hydrated, precipitation of, 133
impossibility of the reduction of, by the ordinary reagents, 230
liquefaction of, 231
manufacture of, by Bergius, 379
native sulphate of, 50, 51
not reduced by sodium or potassium, 230
occurrence of, in plants, 39, 40
preparation of, for reduction, 133–152
reduction of, by carbon, 231, 240, 241, 415
hydrogen, 231, 240, 241, 407
magnesium, 229, 230, 437, 438
theoretical aspect of the reduction of, 229
temperature at which acetylene should begin to reduce, 241
various names for, 2
Aluminate of soda, precipitation of alumina from, 143
Aluminates, 109, 110
properties of the various, 114, 115
Aluminite, 127
Aluminium, action of air on, 83–85
alkaline sulphates and carbonates on, 104
ammonia on, 100
bromine on, 106
caustic alkalies on, 99, 100
chlorine on, 106
cryolite on, 103
fluorine on, 106
fluorspar on, 102, 103
hydrochloric acid on, 91, 92
hydrogen on, 106
iodine on, 106
lime water on, 100
nitre on, 104
nitric acid on, 90, 91

Aluminium, action of on baryta, 105
carbonic oxide, 106
copper oxide, 105
solutions, 101
ferric oxide, 105
lead oxide, 105
solutions, 101, 102
manganese dioxide, 105
oxide, 436
mercurous chloride, 106
mercury solutions, 101
metallic oxides, 105, 106
silver chloride, 106
solutions of aluminium salts, 102
of metallic chlorides, 102
zinc oxide, 105
solution, 102
organic acids, vinegar, etc., on, 92–97
secretions on, 98, 99
phosphate of lime on, 106
sea-water on, 97, 98
silicates and borates on, 103, 104
silver solutions on, 101
sodium chloride on, 97, 98
solutions of metallic salts on, 100–102
sulphuric acid on, 88–90
water on, 85, 86
alloys, 492–533
Bamberg's method of preparing, 427
Aluminium alloys, groups of, 493
Hèroult's process of producing, 388
practical production of, 492
amalgam, preparation of, 507
properties of, 508, 509
-ammonium chloride, 117, 118
amorphous alumina in, 59
amount of, produced, 35–38
analyses of, 53–56
and specific gravities of, 63
and aluminium alloys, analysis of, 606–627
carbon, 123–125
nickel, electro-deposition of an alloy of, 311
sodium, double sulphide of, 177
anhydrous silicates of, 49
annealing of, 452
antimonate, 130
-antimony alloys, 495, 496
apparatus for obtaining, 311
-arsenic alloys, 497
articles, polished, tarnishing of, 98, 99
as a base and as an acid, 109
atomic weight of, 83, 301
basic salts of, 110
Basset's process for obtaining, 429–431
bell cast of, 67, 68
Benzon's patent for the reduction of, 414, 415
Bessemer's process for producing, 404, 405
-bismuth alloys, 497
borate, 131, 132
borides, 122, 123
-boron alloys, 497, 498
boron-carbide in, 59
Brass and Bronze Co., of Bridgeport, Conn., 28
brasses, 530–533
forging capability of, 533
tests of, 531, 532
Braun's process for depositing, 310, 311
bromide, 118
heat developed in the formation of, 232
bronze, annealed, resistance of, 560
brazing of, 569
Brin's process for producing, 417, 418
casting of, 548–552

Aluminium bronze, Clark's patents for preparing, 434
dilution of a high per cent., to a lower one, 547
Evrard's process for producing, 414
Faurie's process for preparing, 415, 416
Hampe's experiments in producing, 290
history of the application of, 539
Mann's patent for producing, 417
mechanical properties of (6per cent.), 537
prices of, 35
soldering of, 569, 570
bronzes, 538–571
analysis of, 623–626
annealing and hardening of, 561
anti-friction qualities of, 563, 564
color of, 552, 553
compressive strength of, 554, 555
conductivity of, 564
constitution of, 540–545
diagram of the variation of tensile strength and elongation of, 559, 560
fusibility of, 548
hardness of, 553, 554
melting points of, 548
preparation of, 545–547
prices of, 539, 540
resistance of, to corrosion, 564–567
role of aluminium in, 542, 543
specific gravity of, 553
tensile strength of, 555–561
transverse strength of, 554
uses of, 567–569
working of, 561, 562
Bucherer's process for producing, 400, 401
Bull's process of manufacture, 314
Burghardt and Twining's process for depositing, 314, 315
burning of, 84, 85
cab, 478
-cadmium alloys, 498
-calcium alloys, 498, 499
Calvert and Johnson's experiments on the reduction of, by iron, 420, 421
Aluminium carbide, process of preparing, 124
properties of, 124, 125
carbon required for the production of, 378
carbonate, 131
carboniferous alloy of, 403
casting of, 445–447
castings, hardening of, 453
chemical equivalent of, 301
chemically pure, preparation of, 451
chloride, 115, 116
and aluminium-sodium chloride, preparation of, 152–168
anhydrous, preparation of, 152
apparatus for the continuous electrolysis of, 354
preparation of, used at Salindres, 157–159
calculated difference of potential, for the dissociation of, 369
calories required for the decomposition of, 369
Deville's methods of reducing, by sodium, 252–257
electro-motive force necessary to decompose, 302
graphic formulæ of, 108, 109
heat developed by the combination of some of the elements with, 232
heat for formation of, 242, 243
inconveniences of the reduction of, 275
molten, decomposition of, 398
or aluminium-sodium chloride, methods based on the reduction of, 246-300
purification of, 156, 157
reduction of, by battery, 10
by magnesium, 437
by tin, 439
the vapor of, by zinc, 435
voltage required to decompose, 238
-chlorphosphydride, 118
-chlorsulphydride, 118
-chromium alloys, 499, 500

Aluminium, cleaning and pickling of, 456
clippings, filings, etc., melting of, 442, 443
coating iron work of the tower of the Philadelphia Public Buildings with, 316, 317
metals with, 307, 308, 469–472
-cobalt alloys, 500
color of, 59, 60
combinations of, 39
Comenge's process for producing, 411
commercial, average strength of, 73
carbon in, 57, 58
elements to be sought for in, 606
impurities in, 52
nitrogen in, 58, 59
testing of, with the knife, 62
Co., Limited, bronzes containing nickel made by the, 512–515
incorporation of the, 23
works of the, 212, 270, 271
Neuhausen, sheet aluminium made by the, 465, 466
comparison of actual and atomic specific heats of, 80
of production of, with other metals, 38
compounds, appearance of, 40
behavior of, before the blowpipe, 111
Deville's experiments in reducing, 250–252
methods of reducing, 285–287
Deville-Castner process for the reduction of, 270–273
formulæ of, 40
Frishmuth's process for the reduction of, 269, 270
Gadsden's patent for the reduction of, 269
general methods of formation and properties of, 110, 111
Gerhard's furnace for the reduction of, 289
Grabau's process of reducing, 294–300
Grousillier's improvement in the reduction of, 270
Le Chatellier's method of reducing, by the battery, 324, 325
Aluminium compounds, Monckton's patent for reducing, by the battery, 325
Netto's process of reducing, 290–294
Oersted's experiments in reducing, 246, 247
Percy and Dick's experiments in reducing, 283–285
preparation of, for reduction, 133–178
properties and preparation of, 107–132
reduction of, by electricity, 236, 301–401
by means of potassium and sodium, 246–300
by Niewerth's process, 268
by other means than sodium and electricity, 402–441
from the standpoint of thermal chemistry, 226–245
Minet's views on the, 358
Rose's experiments in reducing, 274–283
structure of, 108–110
Thompson and White's patent for the reduction of, 290
Tissier Bros'. method of reducing, 287, 288
voltage required to decompose, 237
Wöhler's experiments in reducing, 247–250

Aluminium, compressive tests of, 72
cooking utensils, advantages of, 485, 486
-copper alloys, 534–571
general properties of, 534–536
groups of, 534
melting points of, 534–536
Corbelli's patent for producing, 410
process for depositing, 308
corrosion of, 84
cost of, 379, 380, 381, 382
by the Deville process, 267, 268
-Castner process, 273
Hèroult process, 397
by Netto's processes, 294
Cowles Bros'. process of producing, 329–347
Crown Metal Co., 22
crucibles for melting, 103, 104
crystalline form of, 69
crystallization of, 282
cyanide of, reduction of by zinc, 433, 434
decomposition of silver sulphide by, 87
decorations of, 479
density of, increased by being worked, 63
dental plates, action of saliva on, 98
deposition of, from aqueous solution, 307–318
determination of, in aluminium bronze, 624
does the, remain in iron castings? 598, 599
drawing of, 454
ductility of, 76, 77
dust, 76
early production of, by electrolytic methods, 11
effect of alloying on the color of, 493
carbon on the physical properties of, 58
nitrogen on, 58, 59
on steel, 575–581
on wrought-iron, 581–595
purity of, on the amount of heat in, 80
effects of impurities in, 52
elasticity of, 69, 70
Aluminium, electric conductivity of, 81, 82
electro-chemical equivalent of, 301
-deposition of, various patents for, 315
Emanuel's process for producing, 406
engraving of, 456
exhibit at the Columbian Exposition in Chicago, 1893, 34
of, at the Paris Exposition, 1855, 13
expansion of, by heat, 77
Farmer's patent for producing, 347
Faure's proposition to obtain, 398, 399
Feldman's method of producing, 362, 363
-ferro-silicon, claims for, 595, 596
manufacture of, 427
films, color of, by transmitted light, 60
first article made of, 13, 474, 475
experimenter on the isolation of, 3
Fleury's process for producing, 408
fluorhydrate, 120
fluoride, 119
affinity of, for sodium fluoride and potassium fluoride, 275
and aluminium-sodium fluoride (cryolite), preparation of, 168–173
reduction of, 235
by sodium, 294–300
fracture of, 60, 61
freeing of, from impurities, 449–452
fusibility of, 65, 66
fusion of, latent heat of, 79, 80
-gallium alloys, 500, 501
gases in, 57
Gaudin's patent for reducing, 325
Gerhard's process for producing, 406, 407
-gold alloys, 501–503
Gore's process for depositing, 308, 309
Grabau's apparatus for producing, 364, 365
process of producing, 400
Grätzel's process of producing, 326–329
Green's process of producing, 409, 410

Aluminium, grinding, polishing and burnishing of, 455, 456
Hall's process of producing, 372–386
hardening of, 452, 453
hardness of, 61, 62
heat generated by the combination of, with the different elements, 228
required to melt, 81
Hèroult's process of producing, 386–398
high value of the specific heat of, compared with other metals, 81
history of, 1–38
hollow-ware, cast, for culinary use, 447
hydrates, 113
-hydrogen fluoride, 120
immense future of, 474
improving the quality of, 449
impure, phenomena in melting, 442
purifying of, 295
Industrie Actien Gesellschaft, 30
organization and plant of, 393, 394
patent of the, 401
industry at the Paris Exposition, 1889, 33
in 1859, 263, 264
possible lines of improvement in the, 20
progress in the, 33, 34
reactions of use in the, 242–245
revolutions in the, 24
statistics of the, 34–38
W. Weldon on the prospects of the, 20, 21
influence of, in puddling iron, 594, 595
flux or slag on the, 253
on cast-iron, 595–605
the vessel on, 253
in the soot from Cowles Bros'. furnace, 343
iodide, 118, 119
heat developed in the formation of, 232
-iron-alloys, 572–605
melting point of, 588
isolation of, 8
Jeancon's process for depositing, 309, 310
kaolin the natural ore of, 49
Aluminium, Kagensbusch's process of reducing, 325
Kleiner's process for producing, 347–353
Knowles' patent for producing, 410
latent heat of fusion of, 79, 80
-lead alloys, 503, 504
leaf, 76
beating and tempering of, 454
decomposition of, in water, 86
superiority of, 479
Lebedeff's process of producing, 409
loss of, by oxidation during reduction, 280, 281
Lossier's method of producing, 353, 354
-magnesium alloys, 504, 505
magnetism of, 67
malleability of, 75, 76
-manganese alloys, 505, 506
analysis of, 626
mat on, 456
mechanical tests of, by the Pittsburgh Reduction Co., 70–72
value of, 74
melted, improvement in, by blowing air into it, 451
melting of, 442 445
point of, 65, 66
Menge's patent for producing, 347
-mercury, alloys of, 506–509
metallic, occurrence of, 39
sulphates, 129
meta-phosphate, 131
method of obtaining, patented by H. A. Gadsden, 164
military uses of, 475, 476
Minet's electrolytic process of producing, 354–362
miscellaneous uses of, 490, 491
molten, absorption of gases by, 57
peculiarity of, 446
-molybdenum alloys, 509, 510
Montegelas' patents for depositing, 312, 313
Morris' process for producing, 405, 406
naval use of, 476–478
necessity of using pure materials in the production of, 252
-nickel alloys, 510, 511
alloys, analysis of, 626
-copper alloys, 511–516

Aluminium, Niewerth's patent for the reduction of, by iron, 418, 419
process for producing, 411–413
nitrate, 130
nitride, 125, 126
non-aqueous electric processes of depositing, 318–401
normal and neutral salts of, as a base, 110
object of alloying, 493
objections to the term, 5, 6
occurrence of, in nature, 39–51
odor of, 66, 67
origin of the term, 6
output of, by the Hall process, 383
Overbeck and Niewerth's process for depositing, 311, 312
oxidation of, 84, 85
oxide, 112
graphic formulæ of, 108, 109
passementerie, 76
Pearson, Liddon and Pratt's patent for producing, 404
percentage of, in the earth's crust, 39
perfectly pure, Deville's method of obtaining, 252
Petitjean's process for producing, 408, 409
phosphates, 130, 131
-phosphorus alloys, 516, 517
chloride, 117
physical properties of, 52–82
plating of, on copper, 323, 324
on, 472, 473
-platinum alloys, 517
position of, in the periodic classification of the elements, 107, 108
powder of, influence of pressure on, 66
precipitation of, by magnesium, 437
prices of, 14, 15, 17, 18, 20, 35
Process Co., of Washington, D.C., iron-aluminium alloys manufactured by, 426, 427
proportion of, extracted from cryolite, 351
pure, Hèroult and Kiliani's apparatus for producing, 394
impossibility to manufacture, direct from minerals containing silica, 103
purest commercial, analysis of, 451
Aluminium, purification of, 447–452
purity of, produced by Kleiner's process, 352, 353
quality of, produced by Minet's process, 361
racing sulkies, 478
railway carriage, 478
rationale of the action of, on cast iron, 605
reaction according to which cryolite dissolves, 372
reasons for blue tint of, being more prominent after working the metal, 60
its being difficult to solder, 457, 458
reduction of, in the iron blast furnace, 429
Reillon, Montague and Bourgerel's patent for producing, 409
Reinbold's recipe for depositing, 312
relative cost of materials in making, 20
removing discoloration from articles of, 60
researches of H. St. Claire Deville on, 9–16
retrospect of the art of working, 18, 19
Rogers's process of producing, 365–368
rolling of, 453, 454
salts, decomposition of, in aqueous solution, 304
reactions of neutral solutions of, 111
solutions of, action of aluminium on, 102
second quality, analyses of, 381
selenide, 122
selenites, 129, 130
-selenium alloys, 519
chloride, 117
Senet's process for depositing, 311
Seymour's patent for the reduction of, by zinc, 432, 433
silicates, 132
-silicon alloys, 517–519
silver, 516
alloys, 519–521
analysis of, 626
-sodium alloys, 521
chloride, 116, 117
and aluminium chloride, preparation of, 152–168

Aluminium-sodium chloride, Bunsen's and Deville's methods of decomposing, by the battery, 320–324
cost of, 159, 164
largest plant erected for the manufacture of, 159–162
method of preparing, 278, 279
quantities of materials used in the preparation of, 163
or aluminium chloride, methods based on the reduction of, 246–300
reduction of, by sodium, 265–268
by zinc, 429
fluoride, 120, 121
(cryolite) and aluminium fluoride, preparation of, 168–173
lining of, 296
soldering of, 457–469
solution of, by molten cryolite, 371
sonorousness of, 67–69
specific gravity of, 62–65
when molten, 386
heat of, 77–81
stamping and spinning of, 455
suitability of, for culinary utensils, 96, 97
sulphate, 126, 127
or alums, preparation of alumina from, 133–137
sulphide, 121, 122
decomposition of, by antimony and carbon, 438
electrolysis of, 400, 401
heat for combination of, 244
Lisle's experiments in reducing, by zinc, 435
preparation of, 174–178
reduction of, by copper, 417
iron, 418
thermal relations of, 235, 236
voltage required to decompose, 238
Aluminium-sulphur chloride, 117
superiority of, for constructions, 75
taste of, 67
-tellurium alloys, 521, 522
tendency of, to absorb gas, 452
tensile and compressive strength of, 70–75
strength of, affected by annealing, 74
tests of, 71
thermal conductivity of, 82
Thompson's process for depositing, 308
manufacture of, 419, 420
Thowless' proposition to produce, 403, 404
-tin alloys, 522–525
analysis of, 626
melting points of, 524, 525
-titanium alloys, 525–527
torpedo boat of, 477
transverse tests of, 72
tri-valency of, 109
tubes, manufacture of, 454
-tungsten alloys, 527
und Magnesium Fabrik at Hemelingen, 24
Magnesium Fabrik, tests of aluminium brass by the, 532
Magnesium Fabrik, works of the, 328
use of, for batteries, 487, 488
chemical apparatus, 484, 485
coinage, 483, 484
constructions, 487
culinary utensils, 485, 486
flash light powder, 489, 490
lithographic plates, 488, 489
ships, 97, 98
sounding boards, 68, 69
table ware, 486, 487
in aerial navigation, 478
German army, 96
Grove's battery, 91
surgery, 98
uses of, 473–491
vapor, color of, 66
variations in Rose's process of preparing, 279

Aluminium. velocity of sound in, 69
volatilization of, 66
Walker's patents for the electro-deposition of, 313, 314
Warren's experiments in producing, 363, 364
welding of, 457
Willson's process for producing, 399
Winckler's patent for producing, 399
wire, 76, 77
annealed, tensile strength of, 73
tests of strength of, 70
worked and annealed, strength of, 74
working in, 442–491
world's production of, 37, 38
Zdziarski's patent for producing, 364
-zinc alloys, 528–530
analysis of, 626
batteries, 488
-copper alloys, 530–533
Aluminous earths, manufacture of aluminium sulphate from, 127
fluoride slags, utilization of, 148, 149
pig iron, 414
Alumin-um, 6
Alums, 128, 129
or aluminium sulphate, preparation of alumina from, 133–137
Alunite, 128
Amalgam, aluminium, preparation of, 507
properties of, 508, 509
American Aluminium Co., of Milwaukee, experiments of, 365–367
organization of the, 432
Amfreville, works at, 14
Ammonia, action of, on aluminium, 100
alum, 128, 129
Ammonium and aluminium, chloride of, 117
reaction with, of neutral solutions of aluminium salts, 111
Ampère, decomposing power of a current of one, 301, 302
Analysis of aluminium and aluminium alloys, 606–627
-zinc alloy, 626
quantitative, necessity of being preceded by a qualitative analysis, 627
Andalusite, 49
Anderson, W., on the sodium works at Oldbury, 212–215
tests by, of the strength of aluminium bronze, 554, 555, 556
Andrews, G. F., on aluminium-gold alloys, 501, 502
on aluminium-nickel-copper alloys, 516
Anhydrous aluminium sulphate, 126
Annealing aluminium, 452
and hardening aluminium bronzes, 561
Anti-friction alloy, Miller's, 504
qualities of aluminium bronzes, 563, 564
Antimonate of aluminium, 130
Antimony and aluminium, alloys of, 495, 496
reduction by, 438
Aqua ammonia, reaction with, of neutral solutions of aluminium salts, 111
Arc, electric, reduction of disthene in the, 319
Argil, 2
Arkansas, deposits of bauxite in, 41
Arsenic and aluminium, alloys of, 497
Atomic weight of aluminium, 83
Austria, deposits of bauxite in, 41

BAILLE and Fèry on aluminium amalgam, 507, 508, 509
Balances, alloy for beams of, 520
Balland, tests by, of the action of organic acids on aluminium, 94
Bamberg, G., alloys of aluminium prepared by, 427
claims of, 435
Barium aluminate, 114, 115
salts, voltage required to decompose, 237
Barlow, W. H., on the tensile strength of aluminium, 70
Baron, experiments of, on the isolation of aluminium, 3
Baryta, action of aluminium on, 105
Base, action of aluminium as a, 109
Basic aluminium sulphate, 127
Basle, projected aluminium works near, 395
Basset, M. N., process of, for obtaining aluminium, 429–431
Bath, electrolytic, decomposition of a, 306
Hall's, specific gravities of the substances used in, 386

Bath-tubs, 447
Baths, composition and properties of the, used in Minet's process, 357, 358
Batteries, use of aluminium for, 487, 488
Battersea, aluminium works at, 18
Battery, Grove, use of aluminium in the, 91
use of, by Deville and Bunsen, in decomposing aluminium compounds, 320–324
Baudrin, P., alloy of, 512
Baur, J., alloys of, 531
Baux, bauxite from, 44
Bauxite, 40–45, 113
American, analyses of, 43
cost of, 41, 42
foreign, analyses of, 42, 43
French, composition of the typical kinds of, 44
important beds of, 41
imported, cost of, 41
Laur's process of calcining, 143
manufacture of aluminium sulphate from, 127
preparation of alumina from, 137–144
reaction of common salt on, 142
red, 44
Bauxites, American, analyses of, 45
constancy of the titanic acid in, 45
Bayer, Dr. K. J., improvement in the process of extracting alumina from bauxite by, 143, 144
Beams, deck, of aluminium, 478
Beer, action of, on aluminium, 95, 96
Behnke, process of, for preparing alumina, 141
Beketoff, M., experiment of, 429
Bell Bros., aluminium plant of, 18
on drawing aluminium, 454
on Mourey's solders for aluminium, 461
Lowthian, experiment of, 410, 411
Bells, aluminium, 67
Benzon, patent of, 414, 415
Bergius, alumina manufactured by, 379
Berlin, Germany, aluminium works at, 18
Bernard Bros., operation of Minet's process by, 361
works of, 26
Berthaut's proposition, 326
Bertrand, M. A., electro-deposition of aluminium by, 310
Beryllium aluminate, 115
Berzelius, experiments of, 6, 7
process for preparing artificial cryolite, recommended by, 169
Bessemer, H., Jr., process of, 404, 405
steel, effect of aluminium on, 578
Bicycles, use of aluminium for, 478
Biederman, R., directions by, for melting aluminium, 443
on polishing aluminium, 455
on the preparation of alumina, 148
Billings, G. H., alloy of aluminium and carbon of, 575
experiment of, 424
Bismuth and aluminium, alloys of, 497
Blackmore, H. S., process of obtaining sodium, patented by, 203
Blair, A. A., method of determining aluminium in iron and steel, recommended by, 621, 622
on aluminium in steels, 575
Blast-furnace, occurrence of spinel in the slags of, 115
reduction of aluminium in the, 423, 429
Blow-holes, causes of, in wrought-iron castings, 590–592
Blowpipe, behavior of aluminium compounds before the, 111
Boats, tests of the suitability of aluminium bronze for, 566
Boisbaudran, L. de, on aluminium-gallium alloys, 500, 501
Bolley, experiment of, 416
Bombay wootz steel, 422, 576
Boonton, N. J., works at, 31, 396
Borate of aluminium, 131
Borates and silicates, action of, on aluminium, 103, 104
Bornemann, Dr. G., on the use of aluminium for chemical apparatus, 484, 485
Boron-aluminium bronze, 571
and aluminium, alloys of, 497, 498
compounds of, 122, 123
carbide in aluminium, 59
Bourbouze, M., on aluminium-tin alloys, 522
process of, for soldering aluminium, 463
Braces, aluminium, 480
Bradley and Crocker, retort, patented by, 332, 333

Brandy, action of, on aluminium, 95
Brass, aluminium-tin alloy as substitute for, 522
depositing aluminium on, 308, 309
plating aluminium on, 469, 470
with, 473
Brasses, aluminium, 530–533
forging capability of, 533
tests of, 531, 532
Braun, J., process of, for depositing aluminium, 310, 311
Brazing aluminium bronze, 569
Bridgeport, Conn., works at, 31, 396
Brin Bros., preparation by, of iron-aluminium alloys, 425
process of, for coating metals with aluminium, 471
L. Q., process of, 417, 418
Broadwell, H. C., process of, for coating sheet-iron with aluminium, 471, 472
Bromide of aluminium, 118
Bromine, action of, on aluminium, 106
Bronze, analysis of a peculiar product formed in the furnace when smelting for, 342
slags formed in producing, 342, 343
boron-aluminium, 571
Cowles Bros., analyses of, 341
plating aluminium with, 473
phosphor-aluminium, 571
Richards', 533
silicon-aluminium, 570, 571
standard grades of, produced by the Cowles Co., 341
Bronzes, aluminium, 538–571
containing nickel patented by J. Webster, 512–515
Brown, Lieut., experiments on aluminium for military use, 476
Bruner, process of, for preparing aluminium fluoride, 170
Brünner, experiments of, in making sodium, 180
method of, for making aluminium fluoride, 119
Brush dynamo, dubbed the "Colossus," 339
Bucherer, process of, 400, 401
Buchner, G., on the treatment of aluminium containing silicon, 450
Buff-Dunlap washing apparatus, 147
Bull, H. C., manufacture of aluminium proposed by, 314
Bullion, de-silverization of, by aluminium, 503
Bunsen and Deville, methods of, for decomposing aluminium-sodium chloride by the battery, 320–324
isolation of aluminium by electrolysis by, 11
Burghardt and Twining, process of, for depositing aluminium, 314, 315
Burnishing, polishing and grinding aluminium, 455, 456
Butter, action of, on aluminium, 94

CAB, aluminium, 478
Cadmium and aluminium, alloys of, 498
Cailletet on the amalgamation of aluminium, 506
Calcined alum, 128
Calcium aluminate, 115
and aluminium, alloys of, 498, 499
Calvert and Johnson, experiments of, on the reduction of aluminium by iron, 420, 421
on aluminium-iron alloys, 573
process of, 413, 414
Candelabra, aluminium, 479
Canteens, aluminium, 475, 476
Carbon, action of, on alum, 403
and aluminium, 123–125
carbon dioxide, reduction by, 405, 406
bisulphide, heat of formation of, 245
reaction of, on alumina, 245
consumption of, in Hall's process, 378
determination of, in aluminium, 616
dioxide, preparation of, 147
effect of, on the physical properties of aluminium, 58
formula for expressing the heat in, 240
in aluminium, 53
non-wetting of, by molten cryolite, 324
oxysulphide, heat of formation of, 245
presence of, in commercial aluminium, 57, 58
reduction by, without the presence of other metals, 402–405
of alumina by, 231, 240, 241
in the presence of copper, 415

Carbonate of aluminium, 131
Carbonates, alkaline, action of, on aluminium, 104
Carbonic acid gas, precipitation of alumina by, 147, 148
oxide, action of aluminium on 106
formula for finding the temperature at which reduction by, of alumina begins, 240
the heat of formation of, 240
Carburetted hydrogen, reduction by, 408–410
Carhart, Prof., on the thermal conductivity of aluminium, 82
Carnelly, Prof., on the influence of iron on the melting point of aluminium, 572, 573
Carroll, Dr. C. C., alloy of, for dental plates, 520
mode of casting aluminium by, 446
Casting aluminium, 445–447
bronze, 548–552
Castings, aluminium, addition of zinc and copper to. 529
effect of copper on, 537
cast-iron, solidity of, 597
iron, effect of the addition of ferro-aluminium on. 596
mitis, absence of aluminium in, 587
history of, 582, 583
mixture for, 584
production of, 583
properties of, 586, 587
rationale of the process of making, 587–594
raw material for, 583–585
strength of, 587
sharp, of aluminium, 446
wrought-iron, causes for blow-holes in, 590–592
Cast-iron, aluminium in, 423
aluminized, shrinkage of, 602, 603
castings, solidity of, 597
increase in the hardness of, by aluminium, 603
influence of aluminium on, 595–605
rationale of the action of aluminium on, 605
Cast steel, addition of alumina in the manufacture of, 423
Castner, H. Y., invention of, 22–24
Castner, H.Y., process, amount of aluminium produced by the, 36
of, for the manufacture of sodium, 203–217
for the reduction of sodium compounds by electricity, 223–225
for removing iron from aluminium-sodium chloride, 163
reduction of aluminium by, 270–273
Caustic potash, reaction with, of neutral solutions of aluminium salts, 111
soda, electro-motive force required to decompose, 304
molten, electrolysis of, 223–225
reaction with, of neutral solutions of aluminium salts, 111
Ceilings, aluminium, 479
Chancourtois, M. de, on Greenland cryolite, 286, 287
Chandeliers, aluminium, 479
Chanu, M., founding of a works by, 14
Chapelle, M., on the reduction by carbon without the presence of other metals, 402, 403
Chemical apparatus, use of aluminium for, 484, 485
balances, aluminium for the beams of, 482, 483
equivalent of aluminium, 301
properties of aluminium, 83–106
Chemistry, thermal, reduction of aluminium compounds from the standpoint of, 226–245
Chenot, M., claim by, 10
experiments of, 421, 422
Chicago, use of aluminium on a building in, 487
Chiolite, 121
Chloride of aluminium, 115, 116
and sodium, manufacture of, 152–168
reduction of, theoretically considered, 232, 233

Chloride, double, of aluminium and sodium, reduction of, by zinc, 429
Chlorides, alkaline, solutions of, action of aluminium on, 102
anhydrous metallic, preparation of, 165, 166
heat developed by metals in forming, 232, 233
metallic, solutions of, action of aluminium on, 102
sodium or potassium, apparatus for decomposing, 219
Chlorine, action of, on aluminium, 106
determination of, in aluminium, 616
gas, action of, on alumina, 112
qualitative test for, 606
Chrome-steel, aluminium in, 423, 575
Chromium and aluminium, alloys of, 499, 500
determination of, in aluminium, 617, 618
Chrysoberyl, 115
Church on alumina in plants, 39
Cider, action of, on aluminium, 94
Clark, J., patents of, 434
Clarke, F. W., on the percentage of aluminium in the earth's crust, 39
Classen, Dr., method of, for determining aluminium in iron and steel, 622
Clay, manufacture of aluminium sulphate from, 127
use of, for producing aluminium chloride, 167
Cleaning and pickling aluminium, 456
Cleaver, E., patent of, 424, 425
Cobalt and aluminium, alloys of, 500
determination of, in aluminium bronze, 625
Cœhn, recommendation of, in melting aluminium, 452
Coffee, action of, on aluminium, 95, 96
Coinage, aluminium, 483, 484
requirements of a metal for, 483, 484
Color of aluminium, 59, 60
alloys, 493
vapor of aluminium, 66
Colorado, cryolite in, 46
native alum in, 50
Columbian Exposition, Chicago, 1893, aluminium exhibit at the, 34
Comenge, M., on the reduction of aluminium sulphide by copper, 417
on the reduction of aluminium sulphide by iron, 418
preparation of aluminium sulphide proposed by, 177
process of, 411
Compass boxes, aluminium, 482
Compounds of aluminium, structure, properties and preparation of, 107–132
voltage required to decompose, 237
Conductivity, electric, of aluminium, 81, 82
thermal, of aluminium, 82
Constructions, use of aluminium for, 487
Cooking utensils, aluminium, 476
use of aluminium for, 485
Cooper, W. S., castings of aluminium, made by, 447
Copper alloyed with aluminium, production of, 413, 414
aluminate, 115
and aluminium, alloys of, 534–571
depositing aluminium on, 308, 309
determination of, in aluminium, 614
bronze, 624
effect of a small percentage of, on aluminium, 536, 537
on the color of aluminium, 59
malleability of aluminium, 537
elimination of, from aluminium, 449
heat of combination of, with aluminium, 543, 544
nickel and aluminium, alloys of, 511–516
oxide, action of aluminium on, 105
plating aluminium on, 323, 324, 469, 470
with, 473
qualitative test for, 606
reduction in the presence of, or by, 413–418
of aluminium sulphide by, 236, 417

Copper, salts, voltage required to decompose, 237
sheet on which aluminium has been rolled, 473
solutions, action of aluminium on, 101
zinc and aluminium, alloys of, 530–533
Corbelli, patent of, 410
process of, for depositing aluminium, 308
Corbin on aluminium in chrome steel, 575
Corrosion, resistance to, of aluminium bronzes, 564
Corundum, 47, 48
value of, 48
Cowles, A. H., aluminium-manganese alloy of, 505, 506
on aluminium bronze for heavy guns, 567, 568
Bros., aluminium-nickel-copper alloys made by, 516
furnace of, aluminium in the soot from, 343
process of, 329–347
furnaces used in the, 332–336
products of the furnace of, 341–343
reactions in the process of, 343–347
silicon-aluminium bronze of, 570, 571
test of aluminium brasses made by, 531, 532
useful effect of the current in the process of, 344, 345
Co., bronzes, tests of, 554, 555, 556, 557, 558
ferro-aluminium of the, 574
occurrence in the history of the, 346, 347
on the resistance to corrosion of aluminium bronzes, 565
solders for aluminium bronze recommended by, 570
E. H. and A. H., 28
Electric Smelting and Aluminium Co., 28
Electric Smelting and Aluminium Co., infringement of the Hall patents by the, 34
invention, 28, 29
process, principle made use of in the, 28, 29
Cowles Syndicate Co., of England, plant of, 340
Creil, France, works at, 26
installation of Minet's process at, 362
Cross and Hillebrand, description of Colorado cryolite by, 46
Crucible steel, tests of the effect of aluminium on, 580, 581
used in Héroult's process, 388, 390
Crucibles for manufacture of sodium, 208
melting aluminium, 103, 104, 443, 444
iron, used by Rose, 276, 277
lining for, 367, 444, 445
used at the Froges works, 395
Cryolite, 45–47, 120
action of, on aluminium, 103
quartz, 370
spiegeleisen, 436
advantages of, for reduction, 287, 288
amount of aluminium extracted from, 367
artificial, preparation of, 169, 170
boiling of, in solution of soda, 168
commercial, impurities in, 295, 296
cost of, 46
decomposition of, in the wet way, 149–152
experiments on the use of, for producing aluminium, 15
Grätzel on the electrolysis of, 369, 370
Hampe on the electrolysis of, 368–372
importation of, by the Pennsylvania Salt Co., 46
manufacture of aluminium sulphate from, 127
methods based on the reduction of, 274–300
molten, action of, on aluminium, 371
decomposition of, by magnesium, 437
non-wetting of carbon by, 324
specific gravity of, 386
phosphoric acid in, 285, 286
preparation of, 168–173
of alumina from, 144–152
properties of, 45
proportion of aluminium extracted from, 351

Cryolite, pure, composition of, 46
purity of commercial, 367
quartz in, 370
recovering alumina from, 262
reduction of, 285
advantages of the, 281
Wöhler's modifications in the, 289
Schmidt on the electrolysis of, 368, 369
typical analysis of, 46, 47
use of, as a flux, 288
in Kleiner's process, 348, 349
Wöhler's modifications of reducing, 289
Crystalline form of aluminium, 69
Culinary utensils, use of aluminium for, 485, 486
Cunningham, Capt., patents of, 31
sodium processes of, 291, 292
Cupellation of aluminium with lead, 450
Curaudau, production of potassium or sodium by, 179, 180
Curie, P., process of making aluminium chloride proposed by, 165
Current-density, influence of, 305
effect of the tension of the, 306
Cyanide of aluminium, reduction of, by zinc, 433, 434
Cyanite, 49
Cyanogen, reduction by, 410, 411

DAGGER, H. T., on the Cowles process in England, 345
Darling, J. D., on the electro-deposition of aluminium, 317, 318
Davenport, R. W., experiments of, 592
experiments of, with ferro-aluminium, 579, 580
explanation by, of the effect of aluminium on wrought iron, 588, 589
Davy, Sir Humphry, experiment of, to decompose alumina, 319
experiments of, 4, 5
isolation of sodium by, 179
Debray on aluminium bronze, 539
Decorations, use of aluminium for, 479
D'Eichthal, M., 15
"Defender," the, 478
Delaware, kaolin in, 49
Dental plates, alloy for, 520
aluminium for, 480, 481
cast aluminium, 446
of aluminium, 98
Dentistry, use of aluminium in, 481
Desilverizing process, addition of aluminium to the zinc used in the, 529, 530
Deville-Castner process, the, 24, 270–273
cost of aluminium by the, 273
H. St. Claire and Bunsen's methods of decomposing aluminium-sodium chloride by the battery, 320–324
composition of mixtures used by, 258, 261
controversy between, and the Tissier Brothers, 13, 14
experiments of, in reducing aluminium compounds, 250–252
first production of aluminium fluoride by, 119
improvements in the manufacture of sodium by, 180–194, 197–201
method for determining silicon recommended by, 608, 609
method of, for determining fluorine, 616, 617
method of, for determining iron (and aluminium), 611, 612
method of, for determining sodium, 615, 616
method of, for preparing alumina, 134, 135

Deville, H. St. Claire, methods of, based on the reduction of cryolite, 285–287
methods of, for reducing aluminium chloride by sodium, 252–257
on action of air on aluminium, 83, 84
on action of caustic alkalies on aluminium, 99
on action of nitre on aluminium, 104
on action of nitric acid on aluminium, 90
on action of organic acids on aluminium, 92, 93
on action of solutions of metallic salts on aluminium, 100, 101
on action of sulphuretted hydrogen on aluminium, 86, 87
on action of sulphuric acid on aluminium, 88
on action of water on aluminium, 85, 86
on aluminium-boron alloys, 497, 498
on aluminium-lead alloys, 503
on aluminium-mercury alloys, 506
on aluminium-silicon alloys, 517, 518
on aluminium-sodium alloys, 521
on aluminium-zinc alloys, 528, 529
on casting aluminium, 445
on color of aluminium, 59
on crystalline form of aluminium, 69
on effect of iron on aluminium, 572
on freeing aluminium from impurities, 449, 450
Deville, H. St. Claire, on freeing aluminium from slag, 447, 448
on fusibility of aluminium, 65
on gilding and silvering of aluminium, 472
on melting aluminium, 442, 443
on soldering aluminium, 458, 459
on soldering aluminium bronze, 569
on sonorousness of aluminium, 67, 68
on veneering with aluminium, 469, 470
on volatilization of aluminium, 66
process for preparing aluminium fluoride recommended by, 170
process for utilizing aluminous fluoride slags used by, 148, 149
process of, amount of aluminium made by the, 36
process of, for decomposition of cryolite in the wet way, 149, 150
process of, for preparing aluminium chloride on a small and a large scale, 153–157
process of, for preparing artificial cryolite, 169, 170
process of, for reduction of aluminium compounds, 257–268
production of aluminium by, 8
researches of, on aluminium, 9–16
test by, of aluminium bronze, 556
work by, on aluminium, 16
Dewar, Prof., on the relative electrical resistances of metals, 82

Diaspore, 113
Dick and Percy, experiments of, 283–285
Discoloration, removal of, from aluminium, 60
Disthene, 49
laminated, Duvivier's experiment with, 319, 320
Ditte, A., on action of nitric acid on aluminium, 90
sulphuric acid on aluminium, 88
water on aluminium, 86
Drawing aluminium, 454
Ductility of aluminium, 76, 77
Dufour, on the velocity of sound in aluminium, 69
Dullo, M., on reduction of the double chloride of aluminium and sodium by zinc, 429
use of common clay for producing aluminium chloride, 167, 168
Dumas, M., on gases in aluminium, 57
Dust, aluminium, 76
Duvivier's experiment with laminated disthene, 319, 320
Dynamo-electric machinery, advances in the, 24
machines, use of, first proposed, 326

ELASTICITY of aluminium, 69, 70
Electric arc, reduction of disthene in the, 319
conductivity of aluminium, 81, 82
current, mechanical and thermal equivalent of the, 301
furnace. Mierzinski on the use of the, 27, 28
Siemens', 27
lights, shades of aluminium for, 479
processes, classification of non-aqueous, 318
non-aqueous, of depositing aluminium, 318–401
welding of aluminium, 457
Electricity, decomposing power of, 236
reduction of aluminium compounds by, 236, 301–401
Electricity, reduction of aluminium compounds by other means than, 402–441
sodium compounds by, 219–225
Electro-chemical equivalent of aluminium, 301
deposition of a metal, 304, 305
thermal methods, 318
Electrolysis of molten caustic soda, 223–225
sodium chloride, 222, 223
Elements, different, heat developed by sulphur combining with, 235
generated by the combination of aluminium with, 228
heat given out by, combining energetically with oxygen, 229
position of aluminium in the periodic classification of the, 107, 108
Elevators, use of aluminium on, 479
Ellery-Howard Co., New York, use of aluminium plates for printing by the, 489
Emanuel, P. A., process of, 406
Embroidery, aluminium in, 475
Engineering instruments of aluminium, 482
England, amount of aluminium produced in, 36
first aluminium works in, 18
kaolin in, 49
Engraving aluminium, 456
Equivalent, chemical, of aluminium, 301
electro-chemical, of aluminium, 301
Escher, Wyss & Co., aluminium vessels built by, 476
Ettmüller, discovery by, 2
Eureka Tempered Copper Co., claim of the, 453
Evrard, M., production of aluminium bronze by, 414

FALLS OF THE RHINE, aluminium works at, 388
Farmer, M. G., alloy of, 531

Farmer, M. G., apparatus patented by, for obtaining aluminium electrically, 311
patent of, 347
Faraday and Stodart, aluminium-iron alloy obtained by, 575
investigations of, on iron-aluminium alloys, 422, 423
on sonorousness of aluminium, 68
thermal conductivity of aluminium, 82
Faure, C. A., process for producing aluminium chloride patented by, 166, 167
proposition of, 398, 399
Faurie, G. A., claim of, 413
process of, for preparing aluminium bronze, 415, 416
Faustman & Ostberg Mitis Foundry, experiments at the, 577
Feldman, A., method of, 362, 363
Felsobanyte, 127
Ferric oxide, action of aluminium on, 105
Ferro-aluminium, 574
analyses of, 342
-aluminium, analysis of slags formed in producing, 342
claims for, in foundry use, 595, 596
effect of, on the grain of iron, 601, 602
increase in elasticity of iron by the addition of, 600, 601
in fluidity of iron by, 602
in hardness of iron by, 603
in transverse strength of iron by the addition of, 599, 600
manufacture of, 425
mode of adding to iron, 596
practical benefit to poor iron from, 603–604
results of adding, to iron, 605, 606
reduction in the shrinkage of iron by, 602, 603
-aluminiums, analysis of, 618–623
Field glasses, aluminium, 481
Films of aluminium, color of, by transmitted light, 60
Findlay, Ohio, plant at, 432, 433
Fischer, Dr. F., on Braun's process for depositing aluminium, 311
Grätzel's patent claims, 328
Fizeau on the expansion of aluminium by heat, 77
Flash-light powder, use of aluminium for, 489, 490
Fleury, A. L., process of, 408
Fluoride of aluminium, reduction of, theoretically considered, 234, 235
Fluorides of aluminium, 119–120
role of, as a flux, 257, 258
table of the heat of formation of, 234
Fluorine, action of, on aluminium, 106
determination of, in aluminium, 616, 617
gas, action of, on alumina, 112
isolation of, 234
Fluorspar, action of, on aluminium, 102, 103
Flux and slag, influence of, on the aluminium, 253
Foods, action of on aluminium, 94, 96
Forks, aluminium, 486
Fowler, Dr., patent of, for using aluminium in dentistry, 481
Fracture of aluminium, 60, 61
France, aluminium industry, in 19, 20
amount of aluminium produced in, 36
bauxite in, 41
kaolin in, 49
operation of the Hall process in, 362
Fremy, M., on the preparation of aluminium sulphide, 174–176
French Guiana, deposits of bauxite in, 41
Frishmuth, Col. Wm., aluminium manufactured by, 32, 33
electro-deposition of an alloy of nickel and aluminium by, 311
process of, 269, 270
solders of, for aluminium, 462
Froges (Isère), France, works at, 30, 395, 396

Fruits, juices of, action of, on aluminium, 96
Furnace, Cowles Bros'., 334–336
aluminium in the soot from, 343
products of the, 341–343
electric, Mierzinski on the use of the, 27, 28
peculiar product formed in the, 499
for continuous manufacture of sodium in cylinders, 191, 192
mitis castings, 585. 586
production of sodium, 268
Gerhard's, 289
Grabau's, 298
Grätzel's, 326, 327
Niewerth's, 411, 412
Ornholt's, 354
reduction, 266
reverberatory, melting aluminium in the, 444
Siemens' electric. 27
Thomson's, for preparing alumina from cryolite, 144, 145
used in Hèroult's process, 388, 390
Fusibility of aluminium, 65, 66
Fusion of aluminium, latent heat of, 79, 80

GADSDEN, H. A., method of obtaining aluminium patented by, 164
patent of, 269
Gahnite, 115
Galanaugh, aluminium rowing shells of, 478
Gallium and aluminium, alloys of, 500, 501
Galvanizing bath, aluminium-zinc alloy as an addition to the, 529
Gas, absorption of, by aluminium, 452
-fixtures, aluminium, 479
Gaudin, process of, for reducing aluminium, 325
Gehring, Dr. G., method of, for coating metals, stoneware, etc., with aluminium, 471
Geoffroy on the base of alum, 2
Georgia, bauxite in, 41
Bauxite and Mining Co., 41
kaolin in, 49
Gerhard, F. W., furnace of, 289
process of, 406, 407
Gerhart, C. H., aluminium works of, 18
German army, use of aluminium in the, 96
-silver, alloy of, with aluminium, 538
depositing aluminium on, 308, 309
Germany, aluminium industry of, 18
Gibbsite, 113
Gilchrist, P. A., investigations of, on aluminium in steel, 579
Gilding aluminium, 472
Glacière, works at, 15
Gmelin on the amalgamation of aluminium, 507
Gold and aluminium, alloys of, 501–503
heat of combination of, 502. 503
Nürnberg, 501
plating aluminium with, 473
Gore, G., experiments of, 307
on electro-deposition of aluminium, 315
process of, for depositing aluminium, 308, 309
Grabau, L., advantages of the process of, 299
apparatus of, 364, 365
electrolytic process of, 400
on electrolysis of molten sodium chloride, 222, 223
patent of, for reducing aluminium compounds by phosphorus, 440, 441
patented improvements of, 32
process of, 294–300
for producing aluminium fluoride, 171–173
Graphic formulæ of aluminium compounds, 108, 109
Grätzel, R., furnace used by, 326, 327
on the electrolysis of cryolite, 369
patent of, 437
process of, 24, 326–329
Greene and Wahl, patent of, for producing pure metallic manganese, 105, 106
production of pure manganese by, 436

Greene, Dr., experiment of, 436
Green, R. E., process of, 409, 410
Greenland, difficulties in obtaining cryolite from, 286
occurrence of cryolite in, 45
Grill-work, aluminium, 479
Grinding, polishing and burnishing aluminium, 455, 456
Grove battery, use of aluminium in the, 91
Grousillier, H. v., improvement of, 270
Grüner and Lau, on the reduction of aluminium in the blast furnace, 423
on aluminium in pig iron, 575
Guns, heavy, aluminium bronze for, 567, 568

HALL, CHAS. M., electrolytic method of, 25, 26
process of, 372–386
heat developed and distributed in the process of, 384
patents of, 373, 374, 375
process, operation of, in France, 362
not antedated by Deville, 324
reactions and efficiency of the process of, 383–386
in the process of, 384
summary of process of, 374
voltage required to decompose the bath of, 238

Halotrichite, 126
Hampden Emery Co., 47, 48
Hampe, Dr. W., analysis of Cowles Bros'. bronze by, 341
Hampe, Dr. W., experiments of, 290
on electro-deposition of aluminium, 316
electrolysis of cryolite, 368–372
reactions in Cowles' process, 344
reduction of alumina by carbon, 416, 417
Handy, J. O., on the determination of silicon, 610, 611
Hardening aluminium, 452, 453
and annealing aluminium bronzes, 561
Hardness of aluminium, 61, 62
Hare, Dr., experiments of, 4
Harvey Filley Plating Co., electro-deposition of aluminium by the, 310
Haurd, Jas. S, electro-deposition of aluminium by, 310
Hautefeuille, process of, for making crystallized aluminium fluoride, 170, 171
Head-lights, aluminium reflectors for, 479
Heat, calories of, absorbed by acetylene, 241
developed and distributed in Hall's process, 384
by the combination of some of the elements with chlorine, bromine or iodine, 232
expansion of aluminium by, 77
formula for calculating the, of combustion of hydrogen gas, 240
for expressing the, in carbon, 240
for, of formation of carbonic oxide, 240
for, required to decompose alumina, 239
generated by the combination of aluminium with the different elements, 228
given out by elements combining energetically with oxygen, 229
of the formation of fluorides, table of the, 234
specific, of aluminium, 77–81
Helbig on aluminium amalgam, 509
Hellot on the base of alum, 2
Helmet, aluminium, 475
Hemelingen, Aluminium and Magnesium Fabrik at, 24

Hemelingen, works at, 328
Hercules metal, 516
Hercynite, 115
probable occurrence of, in iron ore, 429
Hèroult-alloy process in the United States, 30, 31
and Kiliani, apparatus of, for producing pure aluminium, 394
electrolytic process of, 386–398
current used in, 392
of, useful effect derived from the current in, 392, 393
patent of, 373
process, cost of aluminium by the, 397
Hesse, deposits of bauxite in, 41
Heycock and Neville on aluminium-lead alloys, 504
-tin alloys, 524
Hirzel on aluminium-silver alloys, 521
Hoeveler on aluminium-antimony alloys 496
Hoffman on the base of alum, 2
Holbrook, C. T., on aluminium in pig-iron, 427–429
Hollow-ware, casting of, in aluminium, 447
Horse-shoes, aluminium, 478
Howard and Hill, patent specifications of, 439
Howe, H. M., on the role of aluminium in wrought-iron castings, 592
Hunt, A. E., on action of sodium chloride on aluminium, 97
bauxites of Georgia, Alabama and Arkansas, 45
Dr. T. Sterry, on the production of aluminium by Cowles Bros'. process, 331, 332
Hydrated aluminium sulphate, 126, 127
Hydrochloric acid, action of, on aluminium, 91, 92
Hydrofluoric acid, heat of formation of, 234
Hydrogen, action of, on aluminium, 106
carburetted, reduction by, 408–410
compounds, voltage required to decompose, 237
Hydrogen, electro-chemical equivalent of, 301
gas, equation for the temperature at which alumina will begin to be reduced by, 240
formula for calculating the heat of formation of, 240
reduction by, 406, 407
of alumina, 231, 240
aluminium chloride, bromide, and iodide, 233, 234
sulphide and sulphur, action of, on aluminium, 86, 87
reaction with, of neutral solutions of aluminium salts, 111
union of, with oxygen to form water, 226, 227

ILLINOIS Pure Aluminium Co., manufacture of culinary utensils by the, 485
India, corundum in, 47
Instruments, astronomical and philosophical, use of aluminium bronze for, 567
surgical, 480
Iodide of aluminium, 118
Iodine, action of, on aluminium, 106
Ireland, deposits of bauxite in, 41
Iron aluminate, 115
-aluminium alloys, Brin Bros'. process of preparing, 425
Cleaver's patent for producing, 424, 425
Faraday and Stodart's investigations on, 422, 423
preparation of, by an aluminium company in Kentucky, 425, 426
of, by the Aluminium Process Co., 426, 427
and aluminium, alloys of, 572–605
(and aluminium), determination of, in aluminium, 611–614
blast furnace, reduction of aluminium in the, 429

Iron, Castner's process of removing, from aluminium-sodium chloride, 163
commercial, aluminium taken up by, 574, 575
composition of, used in testing the effects of ferro-aluminium, 597
determination of aluminium in, 621, 622, 623
of, in aluminium bronze, 624
of, modification of Deville's method, 612–614
does the aluminium remain in castings of? 598, 599
effect on grain of, by the addition of ferro-aluminium, 601, 602
of, on the malleability of aluminium, 75
melting point of aluminium, 66
elimination of, from aluminium, 449
increase in elasticity of, by the addition of ferro-aluminium, 600, 601
fluidity of, by ferro-aluminium, 602
hardness of, by aluminium, 603
transverse strength of, by the addition of ferro-aluminium, 599, 600
influence of, on aluminium, 572
the melting point of aluminium, 572, 573
poor, practical benefit to, from ferro-aluminium, 603, 604
practical results of adding ferro-aluminium to, 605, 606
puddling, influence of aluminium in, 594, 595
qualitative test for, 606
reduction by and in presence of, 418–429
in the shrinkage of, by ferro-aluminium, 602, 603
of aluminium sulphide by, 236
rôle of, in aluminium, 53
salts, voltage required to decompose, 237
wrought, effect of aluminium on, 581–595
explanation of the increased fluidity of, by the addition of aluminium, 589, 590
Ivins, E., process of, for making metallic tubes, 454

JABLOCHOFF, P., apparatus of, for decomposing sodium or potassium chlorides, 219
Jacquemont, M., 15
Jarvis, G. A., improvement in the manufacture of sodium patented by, 203
Javel, methods used by Deville at, 252–257
Jeançon, J. A., process of, for depositing aluminium, 309, 310
Jewelry, use of aluminium for, 501, 502
Johannes, I. H., alloy of, 504
Joule on the amalgamation of aluminium, 507
Julien, Capt., tests by, of aluminium-copper alloys, 537
Juniata Valley, manufacture of aluminous pig-iron from the iron ores of the, 428

KAGENBUSCH'S process, 325, 326
Kalait, 131
Kamarsch, test of aluminium wire by, 70
Kaolin, 48, 49
composition of, 48
deposits of, 49
formation of, 48
properties of, 48, 49
value of, 49
Karsten, experiments of, 4
on wootz steel, 576
Keep, J. W., investigations of, on the effect of ferro-aluminium, 597, 598
on effect on the grain of iron by the addition of ferro-aluminium, 601, 602
on increase in the fluidity of iron by ferro-aluminium, 602
on shrinkage of aluminized cast-iron, 602, 603
tests by, 599
of the solidity of castings, 597
Kentucky, aluminium company in, 403
preparation of iron-aluminium alloys by an aluminium company in, 425, 426

Kerl and Stohman on engraving aluminium, 456
Kettles, steam, of aluminium, 486
Kiliani, Dr., modifications in Hèroult's process by, 30
Klaproth, experiments of, 4
Kleiner, Dr. E., process of, 25, 347–353
electrical power consumed in, 352
purity of the aluminium produced by, 352, 353
trial of process of, at Neuhausen, 388
Knife, use of, in testing the quality of aluminium, 62
Knives, aluminium, 486
Knowles, patent of, 410
Kopp on the specific heat of aluminium, 78
Kosman, Dr., on reactions in Castner's process, 215–217
Cowles' process, 344
Krauchkoll on aluminium amalgam, 509
Krupp's works, apparatus erected at, 293, 294

LACE, aluminium in, 475
La Glacière, improvements in the manufacture of sodium at, 197–199
Lamps, safety, of aluminium, 479
Land, C. H., process of, for soldering aluminium, 465
Langley, Prof. J. W., on aluminium-chromium alloys, 499
expansion of aluminium by heat, 77
specific gravity of aluminium, 64
Latent heat of fusion of aluminium, 79, 80
Laur, F., on French bauxites, 44
process of, for calcining bauxite, 143
Lauterborn, F., decomposition of aluminium sulphide by antimony and carbon proposed by, 438
on reduction of aluminium sulphide by iron, 418
patent of, 433, 434
for preparing aluminium sulphide, 178
Lavoisier on alumina, 3, 4
Lead and aluminium, alloys of, 503, 504
cupellation of aluminium with, 450
determination of, in aluminium, 614
bronze, 624
oxide, action of aluminium on, 105
qualitative test for, 606
reduction by, 435, 436
separation of, from aluminium, 449
solutions, action of aluminium on, 101, 102
Leaf, aluminium, 76
beating and tempering of, 454
Lebedeff, process of, 409
Le Chatellier, method of, for reducing aluminium compounds, 324, 325
on tensile strength of annealed aluminium wire, 73
test by, of resistance of annealed aluminium bronze, 560
tests by, of tensile strength of aluminium bronzes, 555
Lechesne, 515
Ledebuhr on aluminium-iron alloys, 574
Lejeal, on aluminium-chromium alloys, 500
-cobalt alloys, 500
-lead alloys, 504
-nickel alloys, 511
-titanium alloys, 526
Le Roy, G. A., tests by, of the action of sulphuric acid on aluminium, 89
Lessiveur méthodique, 146

Le Verrier, determinations by, of the melting points of aluminium bronzes, 548
on carbon in commercial aluminium, 57, 58
on diminishing the amount of silicon in aluminium, 452
on evolution of gas by molten iron, 593
on nitrogen in commercial aluminium, 58, 59
on specific heat of aluminium, 78
process of preparing aluminium carbide by, 124
study by, of the melting points of aluminium-copper alloys, 534, 535
tests by, of aluminium-titanium alloys, 526, 527
-tungsten alloys, 527
Levy, L., on aluminium-titanium alloys, 526
Lieber, R., process of, for preparing alumina, 141, 142
Light, obtaining of, by burning aluminium, 490
Lime-kiln for furnishing carbon dioxide, 147
phosphate of, action of, on aluminium, 106
water, action of, on aluminium, 100
Lisle, Dr., analysis of native alum by, 50, 51
experiments of, 409, 416
in reducing aluminium sulphide by zinc, 435
on reduction of aluminium compounds by tin, 439, 440
on removal of zinc from aluminium, 450
on electro-deposition of aluminium, 316
Lithographic plates, use of aluminium for, 488, 489
Lockport, description of Cowles Bros'. process as carried on at, 333–339
Hall's experiments at, 376
Locomotive head lights, aluminium reflectors for, 479
Lorenz, L., on the thermal conductivity of aluminium, 82
Lossier, method of, 353, 354
Low carbon steel, aluminium for, 578
Löwig, experiments of, in precipitating solution of sodium aluminate, 143
Lubbert and Roscher, investigations of, on the action of organic acids on aluminium, 93, 94
Lunge, Prof. G., tests by, of the action of organic acids upon aluminium, 94–96

MABERY, Prof. C. F., 28
on a peculiar product formed in the electric furnace, 499
on production of aluminium by Cowles Bros'. process, 329–331
process of making aluminium chloride patented by, 165
MacKellar, T., type-metal of, 504
Macquer on the earth of alum, 3
MacTear, F., on Castner's sodium process, 207–212
Magnesia, heat developed in the reaction of, on aluminium chloride, 233
Magnesite, calcined, for lining crucibles, 444, 445
Magnesium, action of, on aluminium fluoride, 235
aluminate, 115
and aluminium, alloys of, 504, 505
reduction by, 437, 438
of alumina, 229, 230
of aluminium sulphide by, 236

Magnesium salts, voltage required to decompose, 238
und Aluminium Fabrik, directions by, for preparing aluminium bronzes, 546, 547
Magnetism of aluminium, 67
Malleability of aluminium, 75, 76
influence of silicon on the, 518
Mallet on action of caustic alkalies on aluminium, 99
color of aluminium, 59
elasticity of aluminium, 69
fusibility of aluminium, 65
malleability of aluminium, 75
specific gravity of aluminium, 62
heat of aluminium, 77, 78
production of aluminium nitride by, 125
Manganese and aluminium, alloys of, 505, 506
analysis of alloys of, 626
determination of, in aluminium bronze, 625
dioxide, action of aluminium on, 105
heat developed in the reaction of, on aluminium chloride, 233
oxide, action of aluminium on, 436
pure metallic, method of producing, 105, 106
production of, 436
reduction by, 436
of aluminium sulphide by, 236
salts, voltage required to decompose, 237
Mann, A., patent of, 417
Mannesmann, addition of tungsten to aluminium recommended by, 527
process of cold rolling, 454
Marggraff on alum and its earth, 2
Margottet, M., description by, of apparatus for the preparation of aluminium chloride, 157–159
on action of aluminium on solutions of metallic chlorides, 102
Margottet, M., on action of hydrogen sulphide on aluminium, 87
Marshall Furnace, Penna., aluminium in pig iron produced at the, 428
Mat on aluminium, 456
Medicine, use of aluminium in, 480, 481
Melting aluminium, 442–445
point of aluminium, 66
points of aluminium-copper alloys, 535
-tin alloys, 525
Menge, patent of, 347
Mercurous chloride, action of aluminium on, 106
Mercury and aluminium, alloys of, 506–509
bottles, manufacture of sodium in, 185–190
solutions, action of aluminium on, 101
Metal, electro-deposition of a, 304, 305
mitis, analyses of, 584, 585
method of treatment of, 585, 586
quality of the, produced by Minet's process, 361
requirements of a, for coinage, 483, 484
Metallic chlorides, anhydrous, preparation of, 165, 166
solutions of, action of aluminium on, 102
oxides, action of aluminium on, 105, 106
salts, action of solutions of, on aluminium, 100–102
Metals, alkaline, reduction of, theoretically considered, 237
coating of, with aluminium, 307, 308, 469–472
effect of a small quantity of aluminium on, 494, 495
heat developed by, in forming chlorides, 232, 233
influence of aluminium on the color of, 494
other, comparison of production of, with aluminium, 38
order of the affinity of the, for sulphur, 236
various, prices of, 64, 65
relative electrical resistances of, 82
weights of, to give a certain strength, 74, 75
specific gravity of, 64
heat of aluminium compared with, 81

Metals, veneering of, with aluminium, 473
Meudon, tests of aluminium-copper alloys at, 537
Michel on aluminium-iron alloys, 573
-manganese alloys, 505
-nickel alloys, 510
-titanium alloys, 526
-tungsten alloys, 527
Mierzinski, Dr. S., on the electro-deposition of aluminium, 316
on the use of the electric furnace, 27, 28
"Mignon," the, 476, 477
Military uses of aluminium, 475, 476
Milk, action of, on aluminium, 94
Miller, C. B., anti-friction alloy of, 504
Milling screens, 567
Milton, England, aluminium works at, 340
Milwaukee, the American Aluminium Company of, 365
Minargent, 511, 512
Mine work, use of aluminium for, 479, 480
Mineral soda, 276
Minet, A., electrolytic process of, 354–362
of, composition and properties of the baths used in the, 357, 358
of, disposition of the apparatus in the, 355–357
experiments of, 26
installations of the process of, 361, 362
on aluminium-tin alloys, 524, 525
on silicon in aluminium, 518
on strength of aluminium strongly worked and annealed, 74
results of the experiments of, 359–361
test by, of an aluminium-tin alloy, 523
views of, 358, 359
voltage required to decompose the bath of, 239
Mitis castings, absence of aluminium in, 587
history of, 582, 583
mixture for, 584
Nobel's furnace for, 585, 586
production of, 583
properties of, 586, 587
rationale of the process of making, 587–594
raw material for, 583–585
strength of, 587
metal, analyses of, 584, 585
method of treatment of, 585, 586
Molybdenum and aluminium, alloys of, 509, 510
Monckton's patent for reducing aluminium compounds, 325
Monnier, M. A., early manufacture of sodium by, 17
Montgelas, R. de, patent of, 437
patents of, for the electrolysis of aqueous solutions, 312, 313
process patented by, for producing aluminium chloride and the double chloride with sodium, 164
Montucci, H., aluminium coinage proposed by, 483
Morin, arguments of, that aluminium bronzes are true chemical combinations, 541, 542
on anti-friction qualities of aluminium bronzes, 563
on veneering aluminium with silver, 473
Morris, J., claim of, 405, 406
Moulds for casting aluminium, 447
Mourey, M., alloys used by, for soldering aluminium, 461, 462
solders of, for aluminium, 459–461
Muller, H., process of, for preparing alumina, 142

NACCARI on the specific heat of aluminium, 78
Nanterre, composition of the mixtures used at, 258, 261
furnace used at, 261
improvement in the manufacture of sodium used at, 199–201

Nanterre, process for utilizing aluminous fluoride slags used at, 148, 149
rationale of the process used at, 257
works at, 15
Napoleon III., assistance of, 11, 12
interest of, in aluminium, 475
Nelson, recommendation by, 473
Neogen, 512
Netto, Dr. C., patents of, 31
process of, 290–294
for the production of sodium, 217–219
and Saloman, processes of, 31
Neuhausen aluminium bronzes, test of, 558, 559
tests at, of the suitability of aluminium bronze for boats, 566
works at, 29, 388
manufacturing cost of aluminium at the, 397, 398
selling price of aluminium at the, 397
New Kensington, Pa., aluminium works at, 382
New Mexico, deposit of native alum in, 50
Newport, Ky., aluminium works in, 403
Niagara Falls, aluminium works at, 382
Nickel and aluminium, alloys, 510, 511
analysis of, 626
use of alloy of, on the "Defender," 478
bronzes containing, 512–515
copper and aluminium, alloys of, 511–516
determination of, in aluminium bronze, 625
plating aluminium with, 473
salts, voltage required to decompose, 237
Nicolai and Langenbach, process of, for soldering aluminium, 466
Niewerth, H., patent of, 418, 419
process of, 411–413
for the reduction of aluminium compounds, 268
Nitrate of aluminium, 120
Nitre, action of, on aluminium, 104
purification of aluminium by, 449
Nitric acid, action of, on aluminium, 90, 91
cold, amount of the action of, on aluminium, 90, 91
resistance of aluminium to, 488
Nitrogen and aluminium, compounds of, 125
effect of, on aluminium, 58, 59
presence of, in commercial aluminium, 58, 59
Nobel's furnace for mitis castings, 585, 586
Novel, J., alloys for soldering recommended by, 464, 465
Nürnberg gold, 501

ODOR of aluminium, 66, 67
Oersted, experiments of, 6
in reducing aluminium compounds, 246–247
Ohio, native alum in, 50
Oil, action of, on aluminium, 94
Oldbury, England, aluminium works at, 23, 212–215, 270, 271
mode of conducting the reduction at, 271, 272
Omholt, I., furnace of, 354
Opera glasses, aluminium, 481
Organic acids, action of, on aluminium, 92–97
secretions, action of, on aluminium, 98, 99
Osmond, Mr., on the melting point of aluminium-iron alloys, 588
Ostberg, Mr., explanation by, of the rationale of the process of making mitis castings, 587
on manufacture of ferro-aluminium, 425
on strength of mitis castings, 587
Overbeck and Niewerth, process of, for depositing aluminium, 311, 312
Overheating of aluminium, 452
Oxides, metallic, action of aluminium on, 105, 106
Oxygen, heat given out by elements combining energetically with, 229

Oxygen, union of hydrogen with, to form water, 226, 227

PACHNOLITE, 121
Painting, protection of aluminium boats by, 478
Pans, evaporating, use of aluminium for, 485
Paracelsus, separation of alum and vitriols by, 2
Paraluminite, 127
Paris Exposition, 1889, aluminium industry at the, 33
Parke's process, addition of aluminium to the zinc used in, 529, 530
Passaic Art Casting Co., Passaic, N. J., castings in aluminium made by the, 446, 447
Passementerie of aluminium, 76, 475
Patricoft, England, works at, 382
Pearson and Pratt, patent of, for the reduction of aluminium in the iron blast furnace, 429
Liddon and Pratt, patent of, 404
Turner and Andrews, claim of, 413
Peligot, cupellation of aluminium by, 450
Pennsylvania Salt Company, purity of cryolite from the, 367
use of cryolite by the, 45, 46
Percy, Dr., experiments of, 17
on aluminium bronze, 538
in pig iron, 575
and Dick, experiments of, 283–285
Periodic classification of the elements, position of aluminium in the, 107, 108
Perspiration, action of, on aluminium, 98
Peters, Mr., on the analysis of ferro-aluminiums, 619
Petitjean on preparation of a double sulphide of aluminium and sodium, 177
process of, 408, 409
Petroleum furnace for mitis castings, 585
Philadelphia Public Buildings, coating the iron work of the tower of the, with aluminium, 316, 317
Phosphate of lime, action of, on aluminium, 106
Phosphates of aluminium, 130
Phosphor-aluminium bronze, 571
Phosphorus and aluminium, alloys of, 516, 517
chloride of, 117, 118
reduction by, 440, 441
Pickling and cleaning aluminium, 456
Pieper; process for preparing artificial cryolite patented by, 170
Pig iron, presence of aluminium in, 574, 575
irons, aluminium in, 423, 427–429
Pionchon on the specific heat of aluminium, 79
Pittsburgh Reduction Co., 26
aluminium-nickel alloys of the, 511
-titanium alloys made by the, 526
cost of producing aluminium by the, 381
enlargement and removal of the plant of the, 381, 382
mechanical tests of aluminium by the, 70–72
mode of polishing sheet aluminium used by the, 456
organization and plant of, 376
remelting plant of, 379
suit of the, against the Cowles Co., 346, 347
Testing Laboratory, analyses of commercial aluminium by the, 55

Plants, alumina in, 39, 40
Plates, aluminium, 486
Plating on aluminium, 472, 473
Platinum, plating of, on aluminium, 473
Polishing, burnishing and grinding aluminium, 455, 456
Pontoons, aluminium, 476
Potash alum, 128
Potassium aluminate, 114
and sodium, Netto's patents for the reduction of, 31
reduction of aluminium compounds by means of, 246–300
chloride, apparatus for decomposing, 219
dangers of handling, 181
heat developed in the reaction of, on aluminium chloride, 233
reduction of aluminium sulphide by, 236
salts, voltage required to decompose, 237
Pott on the base of alum, 2
Pressing of aluminium ware, 455
Pressure, influence of, on aluminium powder, 66
Proctor, B. S., on the resistance to corrosion of aluminium bronzes, 564, 565
Propeller blades, aluminium bronze for, 568, 569
Puddling, influence of aluminium in, 594
Pumps, use of aluminium bronze for, 567
Purification of aluminium, 447–452
Purple alloy of aluminium and gold, 502
ore, use of, in Castner's sodium process, 208

QUARTZ, occurrence of, in cryolite, 370

RAILWAY carriage, aluminium, 478
Rammelsberg, Prof., investigations by, of the different states of silicon in aluminium, 56
on the forms in which silicon occurs in aluminium, 609
Reactions, chemical, of aluminium salts, 111
in the Hall process, 384
Reagents, ordinary, impossibility of the reduction of alumina by, 230
reaction with, of neutral solutions of aluminium salts, 111
Reduction by double reaction, 411–413
furnace, 266
of alumina by acetylene gas, 241
aluminium chloride or aluminium-sodium chloride, methods based on the, 246–300
compounds by electricity, 236
by other means than sodium or electricity, 402–441
theoretically considered, 226–245
cryolite, methods based on the, 274–300
Reflectors, use of aluminium for, 479
Regelsberger, F., on the determination of silicon, 610
Regnault on the specific heat of aluminium, 77, 78
Reichel on preparation of aluminium sulphide, 176
reduction of aluminium sulphide by copper, 417
by iron, 418
Reillon, Montague and Bourgerel, patent of, 409
process for producing aluminium sulphide patented by, 177
Reimar, G. W., statement by, 403
Reinbold, H., recipe of, for depositing aluminium, 312
Republic Mining and Manufacturing Co., 41
Rheinfelden, projected aluminium works at, 395
Rhine Falls, plant at the, 388, 394, 395
Ricciardi on the assimilation of alumina by plants, 39, 40

Richards, J., alloy of, as an addition to the galvanizing bath, 529
bronze invented by, 533
on an aluminium-tin alloy, 523, 524
on buffing and burnishing aluminium, 455, 456
solder of, for aluminium, 467–469
Rifle, aluminium bronze, test of an, 566, 567
Riley, E., analyses by, of mitis metal, 584, 585
Roberts-Austen, Prof. W. C., on aluminium-gold alloys, 501, 502
Rocca, manufacture of alum in, 1
Roche on aluminium-antimony alloys, 496
Rock alum, 1
Rogers, Prof., analysis of pure cryolite by, 46
experiments of, in reducing sodium compounds, 219–222
on wootz steel, 576
process of, 365–368
Rolling aluminium, 453, 454
Roman, B. I., solder of, for aluminium, 466, 467
Roscoe, Sir H., on the sodium works at Oldbury, 212–215
Rose, H., experiments of, 17
in the reduction of aluminium compounds, 274–283
Rossiter & Co., aluminium boats constructed by, 478
Rössler, patent of, 530
Rouen, history of the works at, 14
Roussin on the precipitation of aluminium by magnesium, 437
Rowing shells, aluminium, 478
Royal Gun Foundry, Woolwich, tests of aluminium bronzes in the, 554, 555, 556
Rupp, tests by, of food kept in aluminium vessels, 94
Ruprecht and Tondi, experiments of, 4

SAARBURGER, letter of, on the Grätzel process, 328
process, 24, 25
Safety-lamps, aluminium, 479
Saint-Michel, Savoy, installation of Minet's process at, 362
works at, 26
Salindres, apparatus for preparing aluminium chloride at, 157–159
expense of the process in use at, 267, 268
preparation of alumina at, 137–141
principal chemical reactions in the process used at, 265
process in use at, 264–268
works at, 15
Saliva, action of, on aluminium, 94
Saloman and Netto, processes of, 31
Salt, common, reaction of, on bauxite, 142
Salts, basic, of aluminium, 110
metallic, action of solutions of, on aluminium, 100–102
neutral, of aluminium, 110
Sauer, C., process of, for soldering aluminium, 464
Sauerwein, process of, for the decomposition of cryolite, 150, 151
Sauvage, F. H., alloy of, 512
Savaresi, experiments of, 4
Savoy, installation of Minet's process in, 362
Scales, aluminium, 482
Schaffhausen, aluminium works near, 388
Schering, use of Grätzel's process by, 328
Schlosser, directions by, for soldering for aluminium bronze, 569, 570
solder for aluminium recommended by, 462, 463
Schmidt, Dr. O., on the electrolysis of cryolite, 368, 369
Schuch, decomposition of cryolite according to, 151, 152
Schulze, Fr., test of, 608
Scientific instruments, use of aluminium for, 481–483
Sea-water, action of, on aluminium, 97, 98
Secretions, organic, action of, on aluminium, 98, 99
Sel alumineux, 2
Selenide of aluminium, 122
Selenites of aluminium, 129
Selenium and aluminium, alloys of, 519
chloride of, 117

Self, E. D., test by, of aluminium bronzes, 557, 558
Sellers, Mr., experiments of, on the use of aluminium with iron in casting, 595
Sellon, J. S., process of, for soldering aluminium, 464
Senet, M. L., process of, for depositing aluminium, 311
Sestini, on the solution of alumina in carbonated waters, 131
Sevrard, M., process of, for plating aluminium on copper and brass, 469, 470
Sextant, aluminium, 481, 482
Seymour, F. J., patent of, 432, 433
Shaw, Thos., phosphor-aluminium bronze of, 571
Sheet-iron, coating of, with aluminium, 471, 472
Shimer, P. W., on the occurrence of spinel in blast-furnace slags, 115
Ships, use of aluminium for, 97, 98
Siderite, occurrence of, in cryolite, 149
Siemens, Sir W., electric furnace of, 27
-Martin steel, basic, effect of aluminium on, 578
Silicates and borates, action of, on aluminium, 103, 104
of alumina, extraction of alumina from, 142
of aluminium, constitution and properties of, 132
Silicon-aluminium bronze, 570, 571
and aluminium, alloys of, 517–519
bronze, Evrard's process for producing, 414
condition of the, in aluminium, 56
determination of, in aluminium, 608–611
bronze, 624
different states of, in aluminium, 56
diminishing the amount of, in aluminium, 452
double rôle of, in aluminium, 518, 519
effect of, on aluminium, 518
malleability of aluminium, 75
melting point of aluminium, 66
elimination of, from aluminium, 449
experiments on aluminium containing, 450, 451
graphitoidal, 56
Silicon, reduction by, 441
rôle of, in aluminium, 53
Silliman, Prof. Benj., experiments of, 6
Silver and aluminium, alloys of, 519–521
analysis of alloys of, 626
chloride, decomposition of, by aluminium, 106
sub-chloride, bromide and iodide of, as a flux in soldering aluminium, 466
determination of, in aluminium, 615
plating aluminium with, 473
qualitative test for, 606
salts, voltage required to decompose, 237
solutions, action of aluminium on, 101
sulphide, decomposition of, by aluminium, 87
veneering aluminium with, 473
Silvering aluminium, 472
Slag, freeing aluminium from, 447, 448
or flux, influence of, on the aluminium, 253
Slags, blast-furnace, occurrence of spinel in, 115
composition of, 262, 263
formed in producing bronze, analysis of, 342, 343
ferro-aluminium, analysis of, 342
utilization of aluminous, 148
Smith, Dr., patents of, 432
Smith, Prof. E. F., method of, for determining aluminium in iron and steel, 622, 623
Société Anonyme La Ferro-Nickel, aluminium-nickel-copper alloy made by the, 515
Electro-Metallurgique Française, 30
works of the, 395, 396
Metallurgique Suisse, 29
plant of the, 388–390
Soda alum, 129
mineral, 45
Sodium, advantages of, over potassium, 181
aluminate, 114
precipitation of, 143

Sodium-aluminium chloride, 117
analyses of the residues from the production of, 210
and aluminium, alloys of, 521
chloride, reduction of, by zinc, 429
manufacture of chloride of, 152–168
sulphide of, 177
potassium, Netto's patents for the reduction of, 31
reduction of aluminium compounds by means of, 246–300
apparatus for condensing, 180
reducing, condensing and heating in the manufacture of, 185
carbonate, separation of, from alumina, 148
cast-iron vessels for producing, 199
Castner's process of manufacturing, 203–217
chloride, action of, on aluminium, 97, 98
apparatus for decomposing, 219
calories required for the decomposition of, 369
molten, electrolysis of, 222, 223
composition of mixtures used in the manufacture of, 182–184, 194
compounds, reduction of, by electricity, 219–225
continuous manufacture of, in cylinders, 190–194
cost of, 22, 201
by Castner's process, 210
crucibles used in the production of, 208
determination of, in aluminium, 615, 616
Deville's improvements in the manufacture of, 180–194, 197–201
methods of reducing aluminium chloride by, 252–257
early manufacture of, in the United States, 17
first patent granted in the United States on the manufacture of, 204
fluoride, injury to crucibles by, 263
furnace for the production of, 208
Sodium furnaces, experiments of Tissier Brothers on, 13
heat developed in the reaction of, on aluminium chloride, 233
evolved in action of, on aluminium fluoride, 235
history of, from Davy to Deville, 179, 180
manufacture of, 179–225
in mercury bottles, 185–190
method employed in the manufacture of, 182
minor improvements in the manufacture of, 201–203
patents, Castner's, 23
perfection in the process of producing, 10, 11
phosphate, reactions with, of neutral solutions of aluminium salts, 111
process, radical change in the, 22
processes, Cunningham's, 291, 292
production of, by Netto's process, 217–219
properties of, 181, 182
quantity of metal reduced by, 258
reactions in the production of, 207, 215–217
reduction by, of aluminium fluoride, 294–300
of aluminium compounds by other means than, 402–441
-sodium chloride by, 265–268
sulphide by, 236
salts, voltage required to decompose, 237
solid, reduction by, 253–256
substitutes for, in reducing aluminium, 234
sulphate of, use of, in decomposing bauxite, 143
Tissier Bros'. method of manufacturing, 194–197
use of, in melting aluminium, 452
mixtures employed in the manufacture of, 184, 185
vapor, reduction by, 256, 257
yield of, in Castner's process, 210
Solder, Richards', for aluminium, 467–469
Roman's, for aluminium, 466, 467
Sauer's, for aluminium, 464
satisfactory, requirements of a, 457
Sellon's, for aluminium, 464

Solder, Thowless', for aluminium, 463, 464
Solders, Frishmuth's, for aluminium, 462
Mourey's, for aluminium, 459–461
Schlosser's, for aluminium, 462, 463
Soldering aluminium, 457–469
bronze, 569, 570
Solutions of aluminium salts, reactions of reagents upon, 111
Sound, velocity of, in aluminium, 69
Sounding boards of aluminium, 68, 69
South Carolina, kaolin in, 49
Southern Bauxite and Mining Co., 41
Specific gravity of aluminium, 62–65
molten aluminium, 386
test, 607, 608
Spencer, J. W., tests by, of the effect of aluminium on crucible steel, 580, 581
Spiegeleisen, action of cryolite on, 436
Spilsbury, Mr., test of strength of aluminium wire by, 70
Spinel, 115
Spinning and stamping aluminium, 455
Spoons, aluminium, 486
Sprague on the electro-deposition of aluminium, 315
Springer, Dr. A., on the use of aluminium for sounding boards, 68, 69
Spring on compressing aluminium powder, 66
Stahl on the base of alum, 2
Stamping and spinning aluminium, 455
Statistics of the aluminium industry, 34–38
Statuettes, aluminium, 519
Stead, J. E., method of, for determining aluminium in iron and steel, 623
Steel, aluminium, 581
taken up by, 574, 575
Bombay wootz, 422, 576
cast, addition of alumina in the manufacture of, 423
casters, general use of aluminium by, 577, 578
castings, use of ferro-aluminium in making, 577
chrome, aluminium in, 423
determination of aluminium in, 621, 622, 623
high carbon, poor results by adding aluminium to, 579
Steel, soft, effect of aluminium on the welding capability of, 579
substitution of aluminium for, 487
Stills, use of aluminium for, 485
Stocker on the occurrence of metallic aluminium, 39
Stoke-on-Trent, works at, 28, 340
Stone-ware, coating of, with aluminium, 471
Strange, Mr., on the use of aluminium bronze for astronomical and philosophical instruments, 567
Strength, tensile and compressive of aluminium, 70–75
Strontium salts, voltage required to decompose, 237
Structure of aluminium compounds, 108–110
Stutzer, Prof. A., on the action of caustic alkalies on aluminium, 100
Styria, deposits of bauxite in, 41
Sulkies, racing, use of aluminium for, 478
Sulphate, native, of alumina, 50, 51
Sulphates, alkaline, action of, on aluminium, 104
double, of aluminium and other metals, 129
of aluminium, 126, 127
Sulphide of aluminium, 121
reduction of, theoretically considered, 236
Sulphides, voltage required to decompose, 238
Sulphur and aluminium, chloride of, 117, 118
hydrogen sulphide, action of, on aluminium 86, 87
heat developed by combining with other elements, 235
order of the affinity of the metals for, 236
Sulphuretted hydrogen, action of, on aluminium, 86, 87
of, on solutions of aluminium salts, 111
generation of, from aluminium sulphide, 121
Sulphuric acid, action of, on aluminium, 88–90

Surgery, use of aluminium in, 98, 480
Surveying instruments of aluminium, 482
Suture-wire, aluminium, 480
Sweden, rise of the mitis process in, 577
Swiss Metallurgic Co., 29
Switzerland, aluminium works in, 388
amount of aluminium produced in, 36

TABLE ware, use of aluminium for, 486, 487
Tacony Metal Co., Philadelphia, operation of the electric plant of the, 316–318
works of the, 316
Tarnish on polished aluminium, 98
Taste of aluminium, 67
Taylor, W. J., article by, 17, 18
Tea, action of, on aluminium, 95, 96
-kettles, 447
Tellurium and aluminium, alloys of, 521, 522
Temperature at which acetylene reduces alumina, 241
carbon reduces alumina, 240
hydrogen reduces alumina, 240
Terre argilleuse, 2
Tests, compressive, of aluminium, 72
mechanical, of aluminium, 70–72
tensile, of aluminium, 71
transverse, of aluminium, 72
Tetmayer, Prof., test by, of aluminium brasses, 532
tests by, of aluminium bronzes, 559
Thenard, M., recommendation by, 9, 10
Thermal chemistry, reduction of aluminium compounds from the standpoint of, 226–245
conductivity of aluminium, 82
Thomas and Tilly, patent of, for coating metals with aluminium, 307, 308
Thompson and White, improvements by, in the manufacture of sodium, 202, 203
patent, 290
Thompson, J. B., process of, for depositing aluminium, 308
R. T., on the analysis of ferro-aluminiums, 619, 620
W. P., discovery by, of corundum in the United States, 47
on the production of aluminium by Cowles Bros'. process, 333–339
patent of, 419, 420
Thomson, G. W., on the influence of aluminium in puddling iron, 594, 595
J., process of, for preparing alumina from cryolite by the dry way, 144–147
Thonichte erde, 2
Thowless, O. M., process of, for manufacturing sodium, 203
proposition of, 403, 404
solder of, for aluminium, 463, 464
Thurston, Prof., on the drawing capacity of aluminium, 454
Tiers Argent, 520, 521
Tilghman, method of, for preparing alumina, 135, 136
Tin and aluminium, alloys of, 522–525
analysis of alloys of, 626
determination of, in aluminium, 615
bronze, 624
foil, effect of a small addition of aluminium on, 524
properties imparted to, by aluminium, 523
qualitative test for, 607
reduction by, 439, 440
of aluminium sulphide by, 236
use of, in soldering aluminium, 459
Tissier Brothers, controversy between, and Deville, 13, 14
experiments on sodium furnaces by, 13
history by, of the works at Rouen, 14
method of, 287, 288

Tissier Brothers, on action of alkaline sulphates and carbonates on aluminium, 104
of aluminium on metallic oxides, 105, 106
aluminium-antimony alloys, 495
-bismuth alloys, 497
bronze, 538, 539
-gold alloys, 501
-iron alloys, 573
-nickel alloys, 510
-platinum alloys, 517
-tin alloys, 523
amalgamation of aluminium, 506
application of aluminium to cast-iron, 595
gilding aluminium, 472
the effect of iron on aluminium, 572
process of, for the manufacture of sodium, 194–197
work by, on aluminium, 15, 16
Titanic acid, constancy of, in American bauxites, 45
Titanium and aluminium, alloys of, 525–527
determination of, in aluminium, 617
in aluminium, 53
Tomlinson on the specific heat of aluminium, 78
Tondi and Ruprecht, experiments of, 4
Torpedo boat of aluminium, 477
Transit instruments, aluminium, 482
Trusses, aluminium, 480
Tubes, manufacture of, 454
Tungsten and aluminium, alloys of, 527
Tuning forks, aluminium, 67
Turquois, 131
Type metal, MacKellar's, 504

UNIONVILLE Corundum Mines Co., 48
United States Aluminium Metal Co., organization and plant of, 396
amount of aluminium produced in the, 37
Army, use of aluminium in the, 476
Co., plant of the, 382, 383
cryolite in the, 46
deposits of bauxite in, 41
early experiments in, 17
first discovery of corundum in the, 47
patent on the manufacture of sodium granted in the, 204
Hèroult alloy process in the, 30, 31
kaolin in the, 49
manufacture of aluminium culinary utensils in the, 485
Mitis Co., organization of, 582, 583
production of corundum in the, 47
Unwin, Prof., test by, of aluminium bronzes, 557
Uses, miscellaneous, of aluminium, 490

VALENCY of aluminium in its compounds, 109
Valoirette, use of, to operate Minet's process, 362
Vapor of aluminium, color of, 66
Vehicles, use of aluminium for, 478
"Vendenesse," the, 477
Veneering other metals with aluminium, 473
Very, Prof. F., on the magnetism of aluminium, 67
Vessels, use of aluminium in building, 476
Villeveyrac (Hèroult), bauxite from, 44
Vinegar, action of, on aluminium, 92–97
Vitriols and alums, separation of, 2

Volatilization of aluminium, 66
Voltage, equation for the, required to decompose alumina, 239
required for decomposition at high temperatures, 302, 303
Minet's bath, 360, 361
in Hall's process, 378
Hèroult's process, 392
to decompose anhydrous molten substances, 237

WAGNER, R., improvements by, in the manufacture of sodium, 201, 202
process for preparing alumina proposed by, 142, 143
Wagons, ammunition, of aluminium, 476
Wahl and Greene, use of aluminium by, 436
Walker, A., patents of, for the electro-deposition of aluminium, 313, 314
Wanner, M., claims of, 441
Warren, H., experiments of, 363, 364
reduction by, of alumina with hydrogen, 407
H. N., boron-aluminium bronze of, 571
on aluminium-arsenic alloys, 497
-boron alloys, 498
process for producing anhydrous metallic chlorides recommended by, 165, 166
Washington, England, aluminium works at, 18
Monument, aluminium tip on the, 33
Navy Yard, tests of bronzes at the, 554, 556
Water, action of, on aluminium, 85, 86
electro-motive force required to decompose, 303
union of hydrogen with oxygen to form, 226, 227
Watertown Arsenal, tests of Cowles' bronzes at the, 555, 556, 557
Watt, A., on the electro-deposition of aluminium, 316
Wavellite, 131
Weber, decomposition of cryolite in the establishment of, 151
Webster Crown Metal Co., bronzes containing nickel made by the, 512–515
Mr., bronzes of, containing nickel, 512–515
inventions of, 21, 22
process of, for preparing alumina, 136, 137
Wedding, Mr., on Basset's process for obtaining aluminium, 431
Wegner and Guhrs, flux in soldering aluminium recommended by, 466
process of, for plating aluminium, 473
Weights, aluminium, 482
Welding aluminium, 457
Weldon, W., on the prospects of the aluminium industry, 20, 21
process of, 436
Wellman, aluminium boats in the expedition of, 478
Werner, E., flux in soldering aluminium recommended by, 466
West, Thomas D., on casting aluminium bronze, 549–552
Wheelbarrows, aluminium, 487
Wilde, A. E., invention of, 435, 436
Williams Aluminium Co., New York, aluminium-ferro-silicon of the, 595
manufacture of aluminium-ferro-silicon by, 427
Willson, Mr., process of, 399
Winckler, A., patent of, 399
Dr. C., experiments of, in reducing alumina by magnesium, 229, 230
on coating metals with aluminium, 470, 471

Winckler, Dr. C., on electro-deposition of aluminium, 315
reduction of alumina by magnesium, 437, 438
retrospect by, of the art of working aluminium, 18, 19
Wine, action of, on aluminium, 94, 95
Wirtz & Co., aluminium works of, 18
Wittenstroem and Nobel, discovery by, 582
patent of, for use of aluminium in casting wrought iron and steel, 577
Wocheinite, 41
Wöhler, F., experiments of, 7, 8
in reducing aluminium compounds, 247–250
modifications by, of reducing cryolite, 289
on aluminium-arsenic alloys, 497
-calcium alloys, 498, 499
-chromium alloys, 499
-magnesium alloys, 504, 505
-molybdenum alloys, 509, 510
-phosphorus alloys, 516, 517
-selenium alloys, 519
-tellurium alloys, 521, 522
-titanium alloys, 525
process of, for preparing aluminium chloride, 152
Wootz steel, Bombay, 422, 576
Worcester, Mass., plant for the manufacture of mitis castings at, 582
Working aluminium bronzes, 561, 562
in aluminium, 442–491
Wright, Dr. C. R. A., on aluminium-antimony alloys, 495, 496
-cadmium alloys, 498
Wrought iron castings, causes for blow holes in, 590–592
effect of aluminium on, 581–595
explanation of the increased fluidity of, by the addition of aluminium, 589, 590

YACHTS, aluminium, 476
Yates, H. N., on the analysis of ferro-aluminiums, 618, 619

ZDZIARSKI, A., patent of, 364
Zinc aluminate, 115
and aluminium, alloys of, 528–530
analysis of, 626
copper and aluminium, alloys of, 530–533
determination of, in aluminium, 614, 615
bronze, 625
minute quantities in aluminium, 626
effect of, on aluminium, 528
industry, use of aluminium in the, 529, 530
oxide, action of aluminium on, 105
qualitative test for, 606, 607
reaction of, on aluminium chloride, 235
reduction by or in presence of, 429–435
of aluminium sulphide by, 236
salts, voltage required to decompose, 237
separation of, from aluminium, 450
solutions, action of aluminium on, 102
use of, in soldering aluminium, 459

JANNEY & STEINMETZ

No. 421 CHESTNUT STREET

Philadelphia, Pa.

ALUMINUM

Cable Address: AL. TRADE MARK. "ALUMINUM."

Ingots, Sheet, Plates, Foil,

Leaf, Rods, Wire, Bars, Tubing,

Castings,

Solder and Alloys.

Pure Ingot Aluminum for Steel Plants and Foundries.

THE PITTSBURGH REDUCTION CO.

MANUFACTURERS OF

ALUMINUM

INGOTS, BARS, SHEET, WIRE, TUBES AND CASTINGS.

T.P.R.Co.
ALUMINUM

ALIUM
TRADE MARK

MAIN OFFICES,

to which all correspondence should be directed,

No. 121 THIRD AVENUE,

PITTSBURGH, PA., U. S. A.

WORKS:

New Kensington, Westmoreland County, Pa.
Niagara Falls, Niagara County, N. Y.

New York Store, No. 4 Havemeyer Building, Church and Dey Streets,
Chicago Store, No. 132 Lake Street,
Philadelphia Store, No. 360 Bullitt Building.

Mr. JOSEPH RICHARDS

DELAWARE METAL REFINERY,

Eighteenth Street and Washington Avenue,

Philadelphia, Pa., U. S. A.

Patentee of **Richards' Solder for Aluminium.**

Agents for the United States,
Messrs. Janney & Steinmetz,
421 Chestnut Street, Philadelphia.

Agent for Great Britain,
W. Archibald Briggs,
Dundee, Scotland.

Agents for Europe (Continent),
The Aluminium Industrie Actien Gesellschaft,
Neuhausen, Switzerland.

Patentee of **The Use of Aluminium in Galvanizers' Baths.**

Patentee of **The Use of Aluminium in Refining Zinc.**

Inventor of **Richards' Hardened Aluminium.**

Specially adapted for castings of great strength and rigidity.

Inventor of **Richards' Bronze.**

Equal to Manganese Bronze or Phosphor Bronze, at two-thirds the cost.

CHARLES METCALF. JOHN M. FERGUSON.

METCALF & FERGUSON,

ALUMINUM,

Cast, Forged, Pressed, Stamped, Wire and Drawn Shapes, Rivets.

709 Ferguson Block, Pittsburgh, Pa., U. S. A.

The Aluminum World.

A Journal for Manufacturers of Aluminum and its Alloys, Dealers in Aluminum Goods, and for the Metal Industry in General, with Special Reference to the Reduction of Ores by Electricity.

Published at

No. 14 Lafayette Place, New York.

SPECIAL CONTRIBUTORS.

Mr. Alfred E. Hunt,
President of the Pittsburgh Reduction Company.

Prof. Joseph W. Richards,
Lehigh University, Bethlehem, Pa.

Dr. C. W. Hayes,
United States Geological Survey.

Charles N. Butler,
Attorney in Patent Cases, Philadelphia.

Joseph A. Steinmetz,
Philadelphia.

Heinrich Ries,
Columbia College School of Mines.

Subscription in the United States, Canada and Mexico .	**$2.00**
Foreign Subscription	**3.00**

ADVERTISING RATES ON APPLICATION.

Subscriptions, Advertisements and News will be received at the following offices:

New York—25 Broad Street	**Palmer H. Langdon.**
Philadelphia—423 Chestnut Street "	**Janney & Steinmetz.**
Pittsburgh—701 Ferguson Block "	**E. Blair Allen.**
Chicago—123 Fifth Avenue " "	**James Langland.**
London, England—57 Holborn Viaduct "	**W. Durrant.**

Address THE ALUMINUM WORLD,

14 Lafayette Place, New York City, U. S. A

Civilization without Diversified Industries is an Impossibility and all History Bears Witness to this Great Truth. *H. C. B.*

CATALOGUE

OF

Practical and Scientific Books

PUBLISHED BY

Henry Carey Baird & Co.

INDUSTRIAL PUBLISHERS, BOOKSELLERS AND IMPORTERS.

810 Walnut Street, Philadelphia.

☞ Any of the Books comprised in this Catalogue will be sent by mail, free of postage, to any address in the world, at the publication prices.

☞ A Descriptive Catalogue. 94 pages, 8vo., will be sent free and free of postage, to any one in any part of the world, who will furnish his address.

☞ Where not otherwise stated, all of the Books in this Catalogue are bound in muslin.

AMATEUR MECHANICS' WORKSHOP:

A treatise containing plain and concise directions for the manipulation of Wood and Metals, including Casting, Forging, Brazing, Soldering and Carpentry. By the author of the "Lathe and Its Uses." Seventh edition. Illustrated. 8vo.....$2.50

ARLOT.—A Complete Guide for Coach Painters:

Translated from the French of M. ARLOT, Coach Painter, for eleven years Foreman of Painting to M. Eherler, Coach Maker, Paris. By A. A. FESQUET, Chemist and Engineer. To which is added an Appendix, containing Information respecting the Materials and the Practice of Coach and Car Painting and Varnishing in the United States and Great Britain. 12mo.....$1.25

ARMENGAUD, AMOROUX, AND JOHNSON.—The Practical Draughtsman's Book of Industrial Design, and Machinist's and Engineer's Drawing Companion:

Forming a Complete Course of Mechanical Engineering and Architectural Drawing. From the French of M. Armengaud the elder, Prof. of Design in the Conservatoire of Arts and Industry, Paris, and M. Armengaud the younger, and Amoroux, Civil Engineers. Rewritten and arranged with additional matter and plates, selections from and examples of the most useful and generally employed mechanism of the day. By WILLIAM JOHNSON, Assoc. Inst. C. E. Illustrated by fifty folio steel plates, and fifty wood-cuts. A new edition, 4to., cloth. $5.00

ARROWSMITH.—The Paper-Hanger's Companion:

Comprising Tools, Pastes, Preparatory Work; Selection and Hanging of Wall-Papers; Distemper Painting and Cornice-Tinting; Stencil Work; Replacing Sash-Cord and Broken Window Panes; and Useful Wrinkles and Receipts. By JAMES ARROWSMITH. A New, Thoroughly Revised, and Much Enlarged Edition. Illustrated by 25 engravings, 162 pages. (1905) $1.00

ASHTON.—The Theory and Practice of the Art of Designing Fancy Cotton and Woolen Cloths from Sample:

Giving full instructions for reducing drafts, as well as the methods of spooling and making out harness for cross drafts and finding any required reed; with calculations and tables of yarn. By FREDERIC T. ASHTON, Designer, West Pittsfield, Mass. With fifty-two illustrations. One vol. folio.....$4.00

ASKINSON.—Perfumes and and their Preparation:

A Comprehensive Treatise on Perfumery, containing Complete Directions for Making Handkerchief Perfumes, Smelling-Salts, Sachets, Fumigating Pastils; Preparations for the Care of the Skin, the Mouth, the Hair; Cosmetics, Hair Dyes, and other Toilet Articles. By G. W. ASKINSON. Translated from the German by ISIDOR FURST. Revised by CHARLES RICE. 32 Illustrations. 8vo. $3.00

BEANS.—A Treatise on Railway Curves and Location of Railroads:

By E. W. BEANS, C. E. Illustrated. 12mo. Morocco..$1.00

BELL.—Carpentry Made Easy:

Or, The Science and Art of Framing on a New and Improved System. With Specific Instructions for Building Balloon Frames, Barn Frames, Mill Frames, Warehouses, Church Spires, etc. Comprising also a System of Bridge Building, with Bills, Estimates of Cost, and valuable Tables. Illus-

trated by forty-four plates, comprising nearly 200 figures. By WILLIAM E. BELL, Architect and Practical Builder. 8vo. $5.00

BERSCH.—Cellulose, Cellulose Products, and Rubber Substitutes:

Comprising the Preparation of Cellulose, Parchment-Cellulose, Methods of Obtaining Sugar, Alcohol, and Oxalic Acid from Wood-Cellulose; Production of Nitro-Cellulose and Cellulose Esters; Manufacture of Artificial Silk, Viscose, Celluloid, Rubber Substitutes, Oil-Rubber, and Faktis. By DR. JOSEPH BERSCH. Translated by WILLIAM T. BRANNT. 41 Illustrations. (1904.) $3.00

BILLINGS.—Tobacco:

Its History, Variety, Culture, Manufacture, Commerce, and Various Modes of Use. By E. R. BILLINGS. Illustrated by nearly 200 engravings. 8vo. $3.00

BIRD.—The American Practical Dyers' Companion:

Comprising a Description of the Principal Dye-Stuffs and Chemicals used in Dyeing, their Natures and Uses; Mordants and How Made; with the best American, English, French and German processes for Bleaching and Dyeing Silk, Wool, Cotton, Linen, Flannel, Felt, Dress Goods, Mixed and Hosiery Yarns, Feathers, Grass, Felt, Fur, Wool, and Straw Hats, Jute Yarn, Vegetable Ivory, Mats, Skins, Furs, Leather, etc., etc., by Wood, Aniline, and other Processes, together with Remarks on Finishing Agents, and Instructions in the Finishing of Fabrics, Substitutes for Indigo, Water-Proofing of Materials, Tests and Purification of Water. Manufacture of Aniline and other New Dye Wares, Harmonizing Colors, etc., etc.; embracing in all over 800 Receipts for Colors and Shades, *accompanied by* 170 *Dyed Samples of Raw Materials and Fabrics.* By F. J. BIRD, Practical Dyer, Author of "The Dyers' Hand-Book." 8vo. $4.00

BLINN.—A Practical Workshop Companion for Tin, Sheet-Iron, and Copper-plate Workers:

Containing Rules for describing various kinds of Patterns used by Tin, Sheet-Iron and Copper-plate Workers; Practical Geometry; Mensuration of Surface and Solids; Tables of the Weights of Metals, Lead-pipe, etc.; Tables of Areas and Circumferences of Circles; Japan, Varnishes, Lacquers, Cements, Compositions, etc., etc. By LEROY J. BLINN, Master Mechanic. With One Hundred and Seventy Illustrations. 12mo. $2.50

BOOTH.—Marble Worker's Manual:

Containing Practical Information respecting Marbles in general, their Cutting, Working and Polishing; Veneering of Marble; Mosaics; Composition and Use of Artificial Marble,

Stuccos, Cements, Receipts, Secrets, etc., etc. Translated from the French by M. L. BOOTH. With an Appendix concerning American Marbles. 12mo., cloth.....$1.50

BRANNT.—A Practical Treatise on Animal and Vegetable Fats and Oils:
Comprising both Fixed and Volatile Oils, their Physical and Chemical Properties and Uses, the Manner of Extracting and Refining them, and Practical Rules for Testing them; as well as the Manufacture of Artificial Butter and Lubricants, etc., with lists of American Patents relating to the Extraction, Rendering, Refining, Decomposing and Bleaching of Fats and Oils. By WILLIAM T. BRANNT, Editor of the "Techno-Chemical Receipt Book." Second Edition, Revised and in great part Rewritten. Illustrated by 302 Engravings. In Two Volumes. 1304 pp. 8vo.....$10.00

BRANNT.—A Practical Treatise on Distillation and Rectification of Alcohol:
Comprising Raw Materials; Production of Malt, Preparation of Mashes and of Yeast; Fermentation; Distillation and Rectification and Purification of Alcohol; Preparation of Alcoholic Liquors, Liqueurs, Cordials, Bitters, Fruit Essences, Vinegar, etc.; Examination of Materials for the Preparation of Malt as well as of the Malt itself; Examination of Mashes before and after Fermentation; Alcoholometry, with Numerous Comprehensive Tables; and an Appendix on the Manufacture of Compressed Yeast and the Examination of Alcohol and Alcoholic Liquors for Fusel Oil and other Impurities. By WILLIAM T. BRANNT, Editor of "The Techno-Chemical Receipt Book." Second Edition. Entirely Rewritten. Illustrated by 105 engravings. 460 pages, 8vo. (Dec., 1903) $12.50

BRANNT.—India Rubber, Gutta-Percha and Balata:
Occurrence, Geographical Distribution, and Cultivation, Obtaining and Preparing the Raw Materials, Modes of Working and Utilizing them, including Washing, Maceration, Mixing, Vulcanizing, Rubber and Gutta-Percha Compounds, Utilization of Waste, etc. By WILLIAM T. BRANNT. Illustrated. 12mo. A new edition in preparation.

BRANNT.—A Practical Treatise on the Manufacture of Vinegar and Acetates, Cider, and Fruit-Wines:
Preservation of Fruits and Vegetables by Canning and Evaporation; Preparation of Fruit-Butters, Jellies, Marmalades, Catchups, Pickles, Mustards, etc. Edited from various sources. By WILLIAM T. BRANNT. Illustrated by 79 Engravings. 479 pp. 8vo. ..... (Scarce)

BRANNT.—The Metallic Alloys: A Practical Guide
For the Manufacture of all kinds of Alloys, Amalgams, and Solders, used by Metal Workers: together with their Chemical

and Physical Properties and their Application in the Arts and the Industries; with an Appendix on the Coloring of Alloys and the Recovery of Waste Metals. By WILLIAM T. BRANNT. 45 Engravings. Third, Revised, and Enlarged Edition. 570 pages. 8vo. .....Net, $5.00

BRANNT.—The Metal Worker's Handy-Book of Receipts and Processes:

Being a Collection of Chemical Formulas and Practical Manipulations for the working of all Metals; including the Decoration and Beautifying of Articles Manufactured therefrom, as well as their Preservation. Edited from various sources. By WILLIAM T. BRANNT. Illustrated. 12mo..$2.50

BRANNT.—Petroleum:

Its History, Origin, Occurrence, Production, Physical and Chemical Constitution, Technology, Examination and Uses; Together with the Occurrence and Uses of Natural Gas. Edited chiefly from the German of Prof. Hans Hoefer and Dr. Alexander Veith, by WM. T. BRANNT. Illustrated by 3 Plates and 284 Engravings. 743 pp. 8vo.....$12.50

BRANNT.—The Practical Dry Cleaner, Scourer and Garment Dyer:

Comprising Dry, Chemical, or French Cleaning; Purification of Benzine; Removal of Stains, or Spotting; Wet Cleaning; Finishing Cleaned Fabrics; Cleaning and Dyeing Furs, Skin Rugs and Mats; Cleaning and Dyeing Feathers; Cleaning and Renovating Felt, Straw and Panama Hats; Bleaching and Dyeing Straw and Straw Hats; Cleaning and Dyeing Gloves; Garment Dyeing; Stripping, Analysis of Textile Fabrics. Edited by WILLIAM T. BRANNT, Editor of "The Techno-Chemical Receipt Book." Fourth Edition, Revised and Enlarged. Illustrated by Forty-One Engravings. 12 mo. 371 pp. $2.50

CONTENTS: I. Dry Chemical or French Cleaning. II. Removal of Stains, or Spotting. III. Wet Washing. IV. Finishing Cleaned Fabrics. V. Cleaning and Dyeing Furs, Skin Rugs and Mats. VI. Cleaning and Dyeing Feathers. VII. Cleaning and Renovating Felt, Straw and Panama Hats; Bleaching and Dyeing Straw and Straw Hats. VIII. Cleaning and Dyeing Gloves. IX. Garment Dyeing. X. Stripping Colors from Garments and Fabrics. XI. Analysis of Textile Fabrics. Index.

BRANNT.—The Soap Maker's Hand-Book of Materials

Processes and Receipts for every description of Soap including Fats, Fat Oils and Fatty Acids; Examination of Fats and Oils; Alkalies; Testing Soda and Potash; Machines and Utensils; Hard Soaps; Soft Soaps; Textile Soaps; Washing Powders and Allied Products; Toilet Soaps, Medicated Soaps, and Soap Specialties; Essential Oils and other Perfuming Materials; Testing Soaps. Edited chiefly from the German of DR. C. DEITE, A. ENGELHARDT, F. WILTNER,

and numerous other Experts. With Additions by WILLIAM T. BRANNT, Editor of "The Techno-Chemical Receipt Book." Illustrated by Fifty-Four Engravings. Second edition, Revised and in great part Re-Written. 535 pp. 8vo.....$6.00

BRANNT.—Varnishes, Lacquers, Printing Inks and Sealing Waxes:
Their Raw Materials and their Manufacture, to which is added the Art of Varnishing and Lacquering, including the Preparation of Putties and of Stains for Wood, Ivory, Bone, Horn, and Leather. By WILLIAM T. BRANNT. Illustrated by 39 Engravings, 338 pages. 12mo.....$3.00

BRANNT—WAHL.—The Techno-Chemical Receipt Book:
Containing several thousand Receipts covering the latest, most important, and most useful discoveries in Chemical Technology, and their Practical Application in the Arts and the Industries. Edited chiefly from the German of Drs. Winckler, Elsner, Heintze, Mierzinski, Jacobsen, Koller and Heinzerling, with additions by WM. T. BRANNT and WM. H. WAHL, Ph. D. Illustrated by 78 engravings. 12mo. 495 pages.....$2.00

BROWN.—Five Hundred and Seven Mechanical Movements:
Embracing all those which are most important in Dynamics, Hydraulics, Hydrostatics, Pneumatics, Steam Engines, Mill and other Gearing, Presses, Horology, and Miscellaneous Machinery; and including many movements never before published, and several of which have only recently come into use. By HENRY T. BROWN.....$1.00

BULLOCK.—The Rudiments of Architecture and Building:
For the use of Architects, Builders, Draughtsmen, Machinists, Engineers and Mechanics. Edited by JOHN BULLOCK, author of "The American Cottage Builder." Illustrated by 250 Engravings. 8vo. $2.50

BYRNE.—Hand-Book for the Artisan, Mechanic, and Engineer:
Comprising the Grinding and Sharpening of Cutting Tools, Abrasive Processes, Lapidary Work, Gem and Glass Engraving, Varnishing and Lacquering, Apparatus, Materials and Processes for Grinding and Polishing, etc. By OLIVER BYRNE. Illustrated by 185 wood engravings. 8vo. $4.00

BYRNE.—Pocket-Book for Railroad and Civil Engineers:
Containing New, Exact and Concise Methods for Laying out Railroad Curves, Switches, Frog Angles and Crossings; the Staking out of work; Levelling; the Calculation of Cuttings; Embankments; Earthwork, etc. By OLIVER BYRNE. 18mo., full bound, pocketbook form.....$1.50

BYRNE.—The Practical Metal-Worker's Assistant:
Comprising Metallurgic Chemistry; the Arts of Working all Metals and Alloys; Forging of Iron and Steel; Hardening and Tempering; Melting and Mixing; Casting and Founding; Works in Sheet Metals; the Process Dependent on the Ductility of the Metals; Soldering; etc. By JOHN PERCY. The Manufacture of Malleable Iron Castings, and Improvements in Bessemer Steel. By A. A. FESQUET, Chemist and Engineer. With over Six Hundred Engravings, Illustrating every Branch of the Subject. 8vo. $3.50

CABINET MAKER'S ALBUM OF FURNITURE:
Comprising a Collection of Designs for various Styles of Furniture. Illustrated by Forty-eight Large and Beautifully Engraved Plates. Oblong, 8vo. $1.50

CALLINGHAM.—Sign Writing and Glass Embossing:
A complete Practical Illustrated Manual of the Art. By JAMES CALLINGHAM. To which are added Numerous Alphabets and the Art of Letter Painting Made Easy. By JAMES C. BADENOCH. 258 pages. 12mo. $1.50

CAREY.—A Memoir of Henry C. Carey:
By DR. WM. ELDER. With a portrait. 8vo., cloth.....75

CAREY.—The Works of Henry C. Carey:
Manual of Social Science. Condensed from Carey's "Principles of Social Science." By KATE MCKEAN. 1 vol. 12mo. $2.00

Miscellaneous Works. With a Portrait. 2 vols. 8vo. $10.00
Past, Present and Future. 8vo. $2.50
Principles of Social Science. 3 volumes, 8vo..... $10.00
The Slave-Trade, Domestic and Foreign; Why it Exists, and How it may be Extinguished (1853). 8vo.....$2.00
The Unity of Law: As Exhibited in the Relations of Physical, Social, Mental and Moral Science (1872). 8vo....$2.50

COOLEY.—A Complete Practical Treatise on Perfumery:
Being a Hand-book of Perfumes, Cosmetics and other Toilet Articles, with a Comprehensive Collection of Formulæ. By ARNOLD COOLEY. 12mo. $1.00

COURTNEY.—The Boiler Maker's Assistant in Drawing, Templating, and Calculating Boiler Work and Tank Work, etc.
Revised by D. K. CLARK. 102 ills. Fifth edition 80

COURTNEY.—The Boiler Maker's Ready Reckoner:
With Examples of Practical Geometry and Templating. Revised by D. K. CLARK, C. E. 37 illustrations. Fifth edition. $1.60

CRISTIANI.—A Technical Treatise on Soap and Candles:
With a Glance at the Industry of Fats and Oils. By R. S. CRISTIANI, Chemist. Author of "Perfumery and Kindred Arts." Illustrated by 176 engravings. 581 pages, 8vo..$15.00

CROSS.—The Cotton Yarn Spinner:
Showing how the Preparation should be arranged for Different Counts of Yarns by a System more uniform than has hitherto been practiced; by having a Standard Schedule from which we make all our Changes. By RICHARD CROSS. 122 pp. 12mo. 75

DAVIDSON.—A Practical Manual of House Painting, Graining, Marbling, and Sign-Writing:
Containing full information on the processes of House Painting in Oil and Distemper, the Formation of Letters and Practice of Sign-Writing, the Principles of Decorative Art, a Course of Elementary Drawing for House Painters, Writers, etc., and a Collection of Useful Receipts. With nine colored illustrations of Woods and Marbles, and numerous wood engravings. By ELLIS A. DAVIDSON. 12mo. $2.00

DAVIES.—A Treatise on Earthy and Other Minerals and Mining:
By D. C. DAVIES, F. G. S., Mining Engineer, etc. Illustrated by 76 Engravings. 12mo. $5.00

DAVIES.—A Treatise on Metalliferous Minerals and Mining:
By D. C. DAVIES, F. G. S., Mining Engineer, Examiner of Mines, Quarries and Collieries. Illustrated by 148 engravings of Geological Formations, Mining Operations and Machinery, drawn from the practice of all parts of the world. Fifth Edition, thoroughly Revised and much Enlarged by his son, E. Henry Davies. 12mo. 524 pages.....$5.00

DAVIS.—A Practical Treatise on the Manufacture of Brick, Tiles and Terra-Cotta:
Including Stiff Clay, Dry Clay, Hand Made, Pressed or Front, and Roadway Paving Brick, Enamelled Brick, with Glazes and Colors, Fire Brick and Blocks, Silica Brick, Carbon Brick, Glass Pots, Retorts, Architectural Terra-Cotta, Sewer Pipe, Drain Tile, Glazed and Unglazed Roofing Tile, Art Tile, Mosaics, and Imitation of Intarsia or Inlaid Surfaces. Comprising every product of Clay employed in Architecture, Engineering, and the Blast Furnace. With a Detailed Description of the Different Clays employed, the Most Modern Machinery, Tools, and Kilns used, and the Processes for Handling, Disintegrating, Tempering, and Moulding the Clay into Shape, Drying, Setting, and Burning. By CHARLES THOMAS DAVIS. Third Edition. Revised and in great part rewritten. Illustrated by 261 engravings. 662 pages..... (Scarce.)

DAVIS.—The Manufacture of Paper:

Being a Description of the various Processes for the Fabrication, Coloring and Finishing of every kind of Paper, Including the Different Raw Materials and the Methods for Determining their Values, the Tools, Machines and Practical Details connected with an intelligent and a profitable prosecution of the art, with special reference to the best American Practice. To which are added a History of Paper, complete Lists of Paper-Making Materials, List of American Machines, Tools and Processes used in treating the Raw Materials, and in Making, Coloring and Finishing Paper. By CHARLES T. DAVIS. Illustrated by 156 Engravings. 608 pages. 8vo. $6.00

DAWIDOWSKY—BRANNT.—A Practical Treatise on the Raw Materials and Fabrication of Glue, Gelatine, Gelatine Veneers and Foils, Isinglass, Cements, Pastes, Mucilages, etc.:

Based upon Actual Experience. By F. DAWIDOWSKY, Technical Chemist. Translated from the German, with extensive additions, including a description of the most Recent American Processes, by WILLIAM T. BRANNT. 2d revised edition, 350 pages. (1905.) Price $3.00

DEITE.—A Practical Treatise on the Manufacture of Perfumery:

Comprising directions for making all kinds of Perfumes, Sachet Powders, Fumigating Materials, Dentifrices, Cosmetics, etc., with a full account of the Volatile Oils, Balsams, Resins, and other Natural and Artificial Perfume-substances, including the Manufacture of Fruit Ethers, and tests of their purity. By DR. C. DEITE, assisted by L. BORCHERT, F. EICHBAUM, E. KUGLER, H. TOEFFNER, and other experts. From the German, by WM. T. BRANNT. 28 Engravings. 358 pages. 8vo. $3.00

DE KONINCK—DIETZ.—A Practical Manual of Chemical Analysis and Assaying:

As applied to the Manufacture of Iron from its Ores, and to Cast Iron, Wrought Iron, and Steel, as found in Commerce. By L. L. DEKONINCK, Dr. Sc., and E. DIETZ, Engineer. Edited with Notes, by ROBERT MALLET, F. R. S., F. S. G., M. I. C. E., etc. American Edition, Edited with Notes and an Appendix on Iron Ores, by A. A. FESQUET, Chemist and Engineer. 12mo. $1.00

DIETERICHS.—A Treatise on Friction, Lubrication, Oils and Fats:

The Manufacture of Lubricating Oils, Paint Oils, and of Grease, and the Testing of Oils. By E. F. DIETERICHS,

Member of the Franklin Institute; Member National Association of Stationary Engineers; Inventor of Dieterichs' Valve-Oleum Lubricating Oils. 12mo. (1906.) *A practical book by a practical man.* $1.25

DUNCAN.—Practical Surveyor's Guide:
Containing the necessary information to make any person of common capacity, a finished land surveyor, without the aid of a teacher. By ANDREW DUNCAN. Revised. 72 Engravings. 214 pp. 12mo. $1.50

DUPLAIS.—A Treatise on the Manufacture and Distillation of Alcoholic Liquors:
Comprising Accurate and Complete Details in Regard to Alcohol from Wine, Molasses, Beets, Grain, Rice, Potatoes, Sorghum, Asphodel, Fruits, etc.; with the Distillation and Rectification of Brandy, Whiskey, Rum, Gin, Swiss Absinthe, etc., the Preparation of Aromatic Waters, Volatile Oils or Essences, Sugars, Syrups, Aromatic Tinctures, Liqueurs, Cordial Wines, Effervescing Wines, etc., the Ageing of Brandy and the improvement of Spirits, with Copious Directions and Tables for Testing and Reducing Spirituous Liquors, etc., etc. Translated and Edited from the French of MM. DUPLAIS. By M. MCKENNIE, M. D. Illustrated. 743 pp. 8vo. $15.00

EDWARDS.—A Catechism of the Marine Steam-Engine:
For the use of Engineers, Firemen, and Mechanics. A Practical Work for Practical Men. By EMORY EDWARDS, Mechanical Engineer. Illustrated by sixty-three Engravings, including examples of the most modern Engines. Third edition, thoroughly revised, with much additional matter. 12mo. 414 pages. $1.50

EDWARDS.—American Marine Engineer, Theoretical and Practical:
With Examples of the latest and most approved American Practice. By EMORY EDWARDS. 85 Illustrations. 12mo. $1.50

EDWARDS.—Modern American Locomotive Engines:
Their Design, Construction and Management. By EMORY EDWARDS. Illustrated. 12mo. $1.50

EDWARDS.—900 Examination Questions and Answers:
For Engineers and Firemen (Land and Marine) who desire to obtain a United States Government or State License. Pocket-book form, gilt edge. $1.50

EDWARDS.—The American Steam Engineer:
Theoretical and Practical, with examples of the latest and most approved American practice in the design and construction of Steam Engines and Boilers. For the use of

Engineers, machinists, boiler-makers, and engineering students. By EMORY EDWARDS. Fully illustrated. 419 pages. 12mo.....$1.50

EDWARDS.—The Practical Steam Engineer's Guide:
In the Design, Construction, and Management of American Stationary, Portable, and Steam Fire-Engines, Steam Pumps, Boilers, Injectors, Governors, Indicators, Pistons and Rings, Safety Valves and Steam Gauges. For the use of Engineers, Firemen, and Steam Users. By EMORY EDWARDS. Illustrated by 119 engravings. 420 pages. 12mo.....$2.00

ELDER.—Conversations on the Principal Subjects of Political Economy:
By DR. WILLIAM ELDER. 8vo..... $1.50

ELDER.—Questions of the Day:
Economic and Social. By DR. WILLIAM ELDER. 8vo. $3.00

ERNI AND BROWN.—Mineralogy Simplified:
Easy Methods of Identifying Minerals, including Ores, by Means of the Blow-pipe, by Flame Reactions, by Humid Chemical Analysis, and by Physical Tests. By HENRI ERNI, A. M., M. D. Fourth Edition, revised, re-arranged and with the addition of entirely new matter, including Tables for the Determination of Minerals by Chemicals and Pyrognostic Characters, and by Physical Characters. By AMOS P. BROWN, E. M., Ph. D. 464 pp. Illustrated by 123 Engravings, pocket-book form, full flexible morocco, gilt edges. $2.50

FAIRBAIRN.—The Principles of Mechanism and Machinery of Transmission:
Comprising the Principles of Mechanism, Wheels, and Pulleys, Strength and Proportion of Shafts, Coupling of Shafts, and Engaging and Disengaging Gear. By SIR WILLIAM FAIRBAIRN, Bart., C. E. Beautifully illustrated by over 150 wood-cuts. In one volume, 12mo.....$2.00

FLEMING.—Narrow Gauge Railways in America:
A Sketch of their Rise, Progress, and Success. Valuable Statistics as to Grades, Curves, Weight of Rail, Locomotives, Cars, etc. By HOWARD FLEMING. Illustrated. 8vo...$1.00

FLEMMING.—Practical Tanning:
A Handbook of Modern Processes, Receipts, and Suggestions for the Treatment of Hides, Skins, and Pelts of Every Description. By LEWIS A. FLEMMING, American Tanner. 630 pp. 8vo. 1910..... $6.00

FORSYTH.—Book of Designs for Headstones, Mural, and other Monuments:
Containing 78 Designs. By JAMES FORSYTH, With an Introduction by CHARLES BOUTELL, M. A. 4to. Cloth...$3.00

GARDNER.—Everybody's Paint Book:
A Complete Guide to the Art of Outdoor and Indoor Painting. 38 illustrations. 12mo. 183 pp. $1.00

GARDNER.—The Painter's Encyclopædia:
Containing Definitions of all Important Words in the Art of Plain and Artistic Painting, with Details of Practice in Coach, Carriage, Railway Car, House, Sign, and Ornamental Painting, including Graining, Marbling, Staining, Varnishing, Polishing, Lettering, Stenciling, Gilding, Bronzing, etc. By FRANKLIN B. GARDNER. 158 illustrations. 12mo. 427 pp. $2.00

GEE.—The Goldsmith's Handbook:
Containing full instructions for the Alloying and Working of Gold, including the Art of Alloying, Melting, Reducing, Coloring, Collecting, and Refining; the Processes of Manipulation, Recovery of Waste; Chemical and Physical Properties of Gold; with a New System of Mixing its Alloys; Solders, Enamels, and other Useful Rules and Recipes. By GEORGE E. GEE. 12mo. $1.25

GEE.—The Jeweler's Assistant in the Art of Working in Gold:
A Practical Treatise for Masters and Workmen. 12mo. $3.00

GEE.—The Silversmith's Handbook:
Containing full instructions for the Alloying and Working of Silver, including the different modes of Refining and Melting the Metal; its Solders; the Preparation of Imitation Alloys; Methods of Manipulation; Prevention of Waste; Instructions for Improving and Finishing the Surface of the Work; together with other Useful Information and Memoranda. By GEORGE E. GEE. Illustrated. 12mo. $1.25

GOTHIC ALBUM FOR CABINET-MAKERS:
Designs for Gothic Furniture. Twenty-three plates. Oblong. $1.00

GRANT.—A Handbook on the Teeth of Gears:
Their Curves, Properties, and Practical Construction. By GEORGE B. GRANT. Illustrated. Third Edition, enlarged. 8vo. $1.00

GREGORY.—Mathematics for Practical Men:
Adapted to the Pursuits of Surveyors, Architects, Mechanics, and Civil Engineers. By OLINTHUS GREGORY. 8vo., plates. $3.00

GRISWOLD.—Railroad Engineer's Pocket Companion for the Field:
Comprising Rules for Calculating Deflection Distances and Angles, Tangential Distances and Angles and all Necessary Tables for Engineers; also the Art of Levelling from Prelim-

inary Survey to the Construction of Railroads, intended Expressly for the Young Engineer, together with Numerous Valuable Rules and Examples. By W. GRISWOLD. 12mo. pocketbook form $1.50

GRUNER.—Studies of Blast Furnace Phenomena:
By M. L. GRUNER, President of the General Council of Mines of France, and lately Professor of Metallurgy at the Ecole des Mines. Translated, with the author's sanction, with an Appendix, by L. D. B. GORDON, F. R. S. E., F. G. S. 8vo. $2.50

Hand-Book of Useful Tables for the Lumberman, Farmer and Mechanic:
Containing Accurate Tables of Logs Reduced to Inch Board Measure, Plank, Scantling and Timber Measure; Wages and Rent, by Week or Month; Capacity of Granaries, Bins and Cisterns; Land Measure, Interest Tables with Directions for finding the Interest on any sum at 4, 5, 6, 7 and 8 per cent., and many other Useful Tables. 32mo., boards. 186 pages. .25

HASERICK.—The Secrets of the Art of Dyeing Wool, Cotton and Linen:
Including Bleaching and Coloring Wool and Cotton Hosiery and Random Yarns. A Treatise based on Economy and Practice. By E. C. HASERICK. *Illustrated by 323 Dyed Patterns of the Yarns or Fabrics.* 8vo. $4.50

HATS AND FELTING:
A Practical Treatise on their Manufacture. By a Practical Hatter. Illustrated by Drawings of Machinery, etc. 8vo. $1.00

HAUPT.—A Manual of Engineering Specifications and Contracts:
By LEWIS M. HAUPT, C. E. Illustrated with numerous maps. 328 pp. 8vo. $2.00

HAUPT.—Street Railway Motors:
With Descriptions and Cost of Plants and Operation of the Various Systems now in Use. 12mo. $1.50

HAUPT.—The Topographer, His Instruments and Methods.
By LEWIS M. HAUPT, A. M., C. E. Illustrated with numerous plates, maps and engravings. 247 pp. 8vo..... $2.00

HULME.—Worked Examination Questions in Plane Geometrical Drawing:
For the Use of Candidates for the Royal Military Academy, Woolwich; the Royal Military College, Sandhurst; the Indian Civil Engineering College, Cooper's Hill; Indian Public Works and Telegraph Department; Royal Marine Light In-

fantry; the Oxford and Cambridge Local Examinations, etc. By F. EDWARD HULME, F. L. S., F. S. A., Art-Master Marlborough College. Illustrated by 300 examples. Small quarto. $1.00

KELLEY.—Speeches, Addresses, and Letters on Industrial and Financial Questions:
By HON. WILLIAM D. KELLEY, M. C. 544 pages. 8vo. $2.00

KEMLO.—Watch-Repairer's Hand-Book:
Being a Complete Guide to the Young Beginner, in Taking Apart, Putting Together, and Thoroughly Cleaning the English Lever and other Foreign Watches, and all American Watches. By F. KELMO, Practical Watchmaker. With Illustrations. 12mo. $1.25

KICK.—Flour Manufacture:
A Treatise on Milling Science and Practice. By FREDERICK KICK, Imperial Regierungsrath, Professor of Mechanical Technology in the Imperial German Polytechnic Institute, Prague. Translated from the second enlarged and revised edition with supplement by H. H. P. POWLES, Assoc. Memb. Institution of Civil Engineers. Illustrated with 28 Plates, and 167 Wood-cuts. 367 pages. 8vo. $10.00

KINGZETT.—The History, Products, and Processes of the Alkali Trade:
Including the most Recent Improvements. By CHARLES THOMAS KINGZETT, Consulting Chemist. With 23 illustrations. 8vo. $2.00

KIRK.—A Practical Treatise on Foundry Irons:
Comprising Pig Iron, and Fracture Grading of Pig and Scrap Irons; Scrap Irons; Mixing Irons; Elements and Metalloids: Grading Iron by Analysis; Chemical Standards for Iron Castings; Testing Cast Iron; Semi-Steel; Malleable Iron; Etc., Etc. By EDWARD KIRK, Practical Moulder and Melter, Consulting Expert in Melting. Illustrated. 294 pages. 8vo. 1911. ..... $3.00

KIRK.—The Cupola Furnace:
A Practical Treatise on the Construction and Management of Foundry Cupolas. By EDWARD KIRK, Practical Moulder and Melter, Consulting Expert in Melting. Illustrated by 106 engravings. Third Edition, revised and enlarged. 482 pages. 8vo. 1910. ..... $3.50

KOENIG.—Chemistry Simplified:
A Course of Lectures on the Non-Metals, Based upon the Natural Evolution of Chemistry. Designed Primarily for Engineers. By GEORGE AUGUSTUS KOENIG, Ph. D., A. M., E. M., Professor of Chemistry, Michigan College of Mines, Houghton. Illustrated by 103 Original Drawings. 449 pp. 12mo. (1906) $2.25

LANGBEIN.—A Complete Treatise on the Electro-Deposition of Metals:
Comprising Electro-Plating and Galvanoplastic Operations, the Deposition of Metals by the Contact and Immersion Processes, the Coloring of Metals, the Methods of Grinding and Polishing, as well as the Description of the Voltaic Cells, Dynamo-Electric Machines, Thermopiles, and of the Materials and Processes Used in Every Department of the Art. Translated from the Fifth German Edition of DR. GEORGE LANGBEIN, Proprietor of a Manufactory for Chemical Products, Machines, Apparatus and Utensils for Electro-Platers, and of an Electro-Plating Establishment in Leipzig. With Additions by WILLIAM T. BRANNT, Editor of "The Techno-Chemical Receipt Book." Sixth Edition, Revised and Enlarged. Illustrated by 163 Engravings. 8vo. 725 pages. (1909.) $5.00

LARKIN.—The Practical Brass and Iron Founder's Guide:
A Concise Treatise on Brass Founding, Moulding, the Metals and their Alloys, etc.; to which are added Recent Improvements in the Manufacture of Iron, Steel by the Bessemer Process, etc., etc. By JAMES LARKIN, late Conductor of the Brass Foundry Department in Reany, Neafie & Co.'s Penn Works, Philadelphia. New edition, revised, with extensive additions. 414 pages. 12mo. $2.50

LEHNER.—The Manufacture of Ink:
Comprising the Raw Materials, and the Preparation of Writing, Copying and Hektograph Inks, Safety Inks, Ink Extracts and Powders, etc. Translated from the German of SIGMUND LEHNER, with additions by WILLIAM T. BRANNT. Illustrated. 12mo. $2.00

LEROUX.—A Practical Treatise on the Manufacture of Worsteds and Carded Yarns:
Comprising Practical Mechanics, with Rules and Calculations applied to Spinning; Sorting, Cleaning, and Scouring Wools; the English and French Methods of Combing, Drawing, and Spinning Worsteds, and Manufacturing Carded Yarns. Translated from the French of CHARLES LEROUX, Mechanical Engineer and Superintendent of a Spinning-Mill, by HORATIO PAINE, M. D., and A. A. FESQUET, Chemist and Engineer. Illustrated by twelve large Plates. 8vo.....$3.00

LESLIE.—Complete Cookery:
Directions for Cookery in its Various Branches. By MISS LESLIE. Sixtieth thousand. Thoroughly revised, with the additions of New Receipts. 12mo.....$1.00

LE VAN.—The Steam Engine and the Indicator:
Their Origin and Progressive Development; including the Most Recent Examples of Steam and Gas Motors, together

with the Indicator, its Principles, its Utility, and its Application. By WILLIAM BARNET LE VAN. Illustrated by 205 Engravings, chiefly of Indicator-Cards. 469 pp. 8vo. $2.00

LIEBER.—Assayer's Guide:

Or, Practical Directions to Assayers, Miners, and Smelters, for the Tests and Assays, by Heat and by Wet Processes, for the Ores of all the principal Metals, of Gold and Silver Coins and alloys, and of Coal, etc. By OSCAR M. LIEBER. Revised. 283 pp. 12mo. $1.50

Lockwood's Dictionary of Terms:

Used in the Practice of Mechanical Engineering, embracing those Current in the Drawing Office, Pattern Shop, Foundry, Fitting, Turning, Smith's and Boiler Shops, etc., etc., comprising upwards of Six Thousand Definitions. Edited by a Foreman Pattern Maker, author of "Pattern Making." 417 pp. 12mo. $3.75

LUKIN.—The Lathe and Its Uses:

Or Instruction in the Art of Turning Wood and Metal. Including a Description of the Most Modern Appliances for the Ornamentation of Plane and Curved Surfaces, an Entirely Novel Form of Lathe for Eccentric and Rose-Engine Turning; A Lathe and Planing Machine Combined; and Other Valuable Matter Relating to the Art. Illustrated by 462 engravings. Seventh edition. 315 pages. 8vo. $4.25

MAUCHLINE.—The Mine Foreman's Hand-Book:

Of Practical and Theoretical Information on the Opening, Ventilating, and Working of Collieries. Questions and Answers on Practical and Theoretical Coal Mining. Designed to Assist Students and Others in Passing Examinations for Mine Foremanships. By ROBERT MAUCHLINE. 3d Edition. Thoroughly Revised and Enlarged by F. ERNEST BRACKETT. 134 engravings. 8vo. 378 pages. (1905.) $3.75

MOLESWORTH.—Pocket-Book of Useful Formulae and Memoranda for Civil and Mechanical Engineers.

By GUILFORD L. MOLESWORTH, Member of the Institution of Civil Engineers, Chief Resident Engineer of the Ceylon Railway. Full-bound in Pocketbook form $1.00

MOORE.—The Universal Assistant and the Complete Mechanic:

Containing over one million Industrial Facts, Calculations, Receipts, Processes, Trades Secrets, Rules, Business Forms, Legal Items, etc., in every occupation, from the Household to the Manufactory. By R. MOORE. Illustrated by 500 Engravings. 12mo. $2.50

NAPIER.—A System of Chemistry Applied to Dyeing:
By JAMES NAPIER, F. C. S. A New and Thoroughly Revised Edition. Completely brought up to the present state of the Science, including the Chemistry of Coal Tar Colors, by A. A. FESQUET, Chemist and Engineer. With an Appendix on Dyeing and Calico Printing, as shown at the Universal Exposition, Paris, 1867. Illustrated. 8vo. 422 pages...$2.00

NICHOLLS.—The Theoretical and Practical Boiler-Maker and Engineer's Reference Book:
Containing a variety of Useful Information for Employers of Labor, Foremen and Working Boiler-Makers, Iron, Copper, and Tinsmiths, Draughtsmen, Engineers, the General Steam-using Public, and for the Use of Science Schools and classes. By SAMUEL NICHOLLS. Illustrated by sixteen plates. 12mo. $2.50

NICHOLSON.—A Manual of the Art of Bookbinding:
Containing full instructions in the different Branches of Forwarding, Gilding, and Finishing. Also, the Art of Marbling Book-edges and Paper. By JAMES B. NICHOLLSON. Illustrated. 12mo., cloth. $2.25

NYSTROM.—On Technological Education and the Construction of Ships and Screw Propellers:
For Naval and Marine Engineers. By JOHN W. NYSTROM, late Acting Chief Engineer, U. S. N. Second edition, revised, with additional matter. Illustrated by seven engravings. 12mo. $1.00

O'NEILL.—A Dictionary of Dyeing and Calico Printing:
Containing a brief account of all the Substances and Processes in use in the Art of Dyeing and Printing Textile Fabrics; with Practical Receipts and Scientific Information. By CHARLES O'NEILL, Analytical Chemist. To which is added an Essay on Coal Tar Colors and their application to Dyeing and Calico Printing. By A. A. FESQUET, Chemist and Engineer. With an appendix on Dyeing and Calico Printing, as shown at the Universal Exposition, Paris, 1867. 8vo. 491 pages. $2.00

ORTON.—Underground Treasures:
How and Where to Find Them. A Key for the Ready Determination of all the Useful Minerals within the United States. By JAMES ORTON, A. M., Late Professor of Natural History in Vassar College, N. Y.; author of the "Andes and the Amazon," etc. A New Edition, with An Appendix on Ore Deposits and Testing Minerals. (1901.) Illustrated. $1.50

OSBORN.—A Practical Manual of Minerals, Mines and Mining:
Comprising the Physical Properties, Geologic Position; Local Occurrence and Associations of the Useful Minerals,

their Methods of Chemical Analysis and Assay; together with Various Systems of Excavating and Timbering, Brick and Masonry Work, during Driving, Lining, Bracing and other Operations, etc. By PROF. H. S. OSBORN, LL. D., Author of "The Prospector's Field-Book and Guide." 171 engravings. Second Edition, revised. 8vo. $4.50

OSBORN.—The Prospector's Field Book and Guide:
In the Search For and the Easy Determination of Ores and Other Useful Minerals. By PROF. H. S. OSBORN, LL. D. Illustrated by 66 Engravings. Eighth Edition. Revised and Enlarged. 401 pages. 12mo. (1910.) $1.50

OVERMAN.—The Moulder's and Founder's Pocket Guide:
A Treatise on Moulding and Founding in Green-sand, Dry-sand, Loam, and Cement; the Moulding of Machine Frames, Mill-gear, Hollow Ware, Ornaments, Trinkets, Bells, and Statues; Description of Moulds for Iron, Bronze, Brass, and other Metals; Plaster of Paris, Sulphur, Wax, etc.; the Construction of Melting Furnaces, the Melting and Founding of Metals; the Composition of Alloys and their Nature, etc., etc. By FREDERICK OVERMAN, M. E. A new Edition, to which is added a Supplement on Statuary and Ornamental Moulding, Ordnance, Malleable Iron Castings, etc. By A. A. FESQUET, Chemist and Engineer. Illustrated by 44 engravings. 12mo. $2.00

PAINTER, GILDER, AND VARNISHER'S COMPANION:
Comprising the Manufacture and Test of Pigments, the Arts of Painting, Graining, Marbling, Staining, Sign-writing, Varnishing, Glass-staining, and Gilding on Glass; together with Coach Painting and Varnishing, and the Principles of the Harmony and Contrast of Colors. Twenty-seventh Edition. Revised, Enlarged, and in great part Rewritten. By WILLIAM T. BRANNT, Editor of "Varnishes, Lacquers, Printing Inks and Sealing Waxes." Illustrated. 395 pp. 12mo. $1.50

PERCY.—The Manufacturing of Russian Sheet-Iron:
By JOHN PERCY, M. D., F. R. S. Paper. 25

POSSELT.—Cotton Manufacturing:
Part I. Dealing with the Fibre, Ginning, Mixing, Picking, Scutching and Carding. By E. A. POSSELT. 104 illustrations, 190 pp. $3.00
Part II. Combing, Drawing, Roller Covering and Fly Frame, $3.00

POSSELT.—The Jacquard Machine Analysed and Explained:
With an Appendix on the Preparation of Jacquard Cards, and Practical Hints to Learners of Jacquard Designing. By E. A.

POSSELT. With 230 illustrations and numerous diagrams. 127 pp. 4to $3.00

POSSELT.—Recent Improvements in Textile Machinery Relating to Weaving:
Giving the Most Modern Points on the Construction of all Kinds of Looms, Warpers, Beamers, Slashers, Winders, Spoolers, Reeds, Temples, Shuttles, Bobbins, Heddles, Heddle Frames, Pickers, Jacquards, Card Stampers, Etc., Etc. By E. A. POSSELT. 4to. Part I, 600 ills.; Part II, 600 ills. Each part $3.00

POSSELT.—Recent Improvements in Textile Machinery, Part III:
Processes Required for Converting Wool, Cotton, Silk, from Fibre to Finished Fabric, Covering both Woven and Knit Goods; Construction of the most Modern Improvements in Preparatory Machinery, Carding, Combing, Drawing, and Spinning Machinery, Winding, Warping, Slashing Machinery, Looms, Machinery for Knit Goods, Dye Stuffs, Chemicals, Soaps, Latest Improved Accessories Relating to Construction and Equipment of Modern Textile Manufacturing Plants. By E. A. POSSELT. Completely Illustrated. 4to..... $7.50

POSSELT.—Technology of Textile Design:
The Most Complete Treatise on the Construction and Application of Weaves for all Textile Fabrics and the Analysis of Cloth. By E. A. POSSELT. 1,500 illustrations. 4to.... $5.00

POSSELT.—Textile Calculations:
A Guide to Calculations Relating to the Manufacture of all Kinds of Yarns and Fabrics, the Analysis of Cloth, Speed, Power and Belt Calculations. By E. A. POSSELT. Illustrated. 4to. $2.00

REGNAULT.—Elements of Chemistry:
By M. V. REGNAULT. Translated from the French by T. FORREST BETTON, M.D., and edited, with Notes, by JAMES C. BOOTH, Melter and Refiner U. S. Mint, and WILLIAM L. FABER, Metallurgist and Mining Engineer. Illustrated by nearly 700 wood-engravings. Comprising nearly 1,500 pages. In two volumes, 8vo., cloth $5.00

RICH.—Artistic Horse-Shoeing:
A Practical and Scientific Treatise, giving Improved Methods of Shoeing, with Special Directions for Shaping Shoes to Cure Different Diseases of the Foot, and for the Correction of Faulty Action in Trotters. By GEORGE E. RICH. 362 Illustrations. 217 pages. 12mo. $2.00

RICHARDS.—Aluminium:
Its History, Occurrence, Properties, Metallurgy and Applications including its Alloys. By JOSEPH W. RICHARDS, A. C.,

Chemist and Practical Metallurgist, Member of the Deutsche Chemische Gesellschaft. Illust. Third edition, enlarged and revised (1895) $6.00

RICHARDSON.—Practical Blacksmithing:
A Collection of Articles Contributed at Different Times by Skilled Workmen to the columns of "The Blacksmith and Wheelwright," and Covering nearly the Whole Range of Blacksmithing, from the Simplest Job of Work to some of the most Complex Forgings. Compiled and Edited by M. T. RICHARDSON.
Vol. I. 210 Illustrations. 224 pages. 12mo $1.00
Vol. II. 230 Illustrations. 262 pages. 12mo. $1.00
Vol. III. 390 Illustrations. 307 pages. 12mo. $1.00
Vol. IV. 226 Illustrations. 276 pages. 12mo. $1.00

RICHARDSON.—Practical Carriage Building:
Comprising Numerous Short Practical Articles upon Carriage and Wagon Woodwork; Plans for Factories; Shop and Bench Tools; Convenient Appliances for Repair Work; Methods of Working; Peculiarities of Bent Timber; Construction of Carriage Parts; Repairing Wheels; Forms of Tenons and Mortises; Together with a Variety of Useful Hints and Suggestions to Woodworkers. Compiled by M. T. RICHARDSON.
Vol. I. 228 Illustrations. 222 pages. $1.00
Vol. II. 283 Illustrations. 280 pages. $1.00

RICHARDSON.—The Practical Horseshoer:
Being a Collection of Articles on Horseshoeing in all its Branches which have appeared from time to time in the columns of "The Blacksmith and Wheelwright," etc. Compiled and edited by M. T. RICHARDSON. 174 Illustrations, $1.00

RIFFAULT, VERGNAUD, and TOUSSAINT.—A Practical Treatise on the Manufacture of Colors for Painting:
Comprising the Origin, Definition, and Classification of Colors, the Treatment of the Raw Materials; the best Formulæ and the Newest Processes for the Preparation of every description of Pigment, and the Necessary Apparatus and Directions for its use; Dryers; the Testing, Application, and Qualities of Paints, etc., etc. By MM. RIFFAULT, VERGNAUD, and TOUSSANT. Revised and Edited by M. F. MALPEYRE. Translated from the French by A. A. FESQUET. Illustrated by Eighty Engravings. 659 pp. 8 vo. $5.00

ROPER.—Catechism for Steam Engineers and Electricians:
Including the Construction and Management of Steam Engines, Steam Boilers and Electric Plants. By STEPHEN ROPER. Twenty-first edition, rewritten and greatly enlarged by E. R. KELLER and C. W. PIKE. 365 pages. Illustrations. 18mo., tucks, gilt $2.00

ROPER.—Engineer's Handy Book:
Containing Facts, Formulæ, Tables and Questions on Power, its Generation, Transmission and Measurement; Heat, Fuel, and Steam; The Steam Boiler and Accessories; Steam Engines and their Parts; Steam Engine Indicator; Gas and Gasoline Engines; Materials; their Properties and Strength; Together with a Discussion of the Fundamental Experiments in Electricity, and an Explanation of Dynamos, Motors, Batteries, etc., and Rules for Calculating Sizes of Wires. By STEPHEN ROPER. 15th edition. Revised and enlarged by E. R. KELLER, M. E., and C. W. PIKE, B. S. With numerous illustrations. Pocket-book form. Leather $3.50

ROPER.—Hand-Book of Land and Marine Engines:
Including the Modeling, Construction, Running, and Management of Land and Marine Engines and Boilers. With illustrations. By STEPHEN ROPER, Engineer. Sixth edition. 12mo., tucks, gilt edge $3.50

ROPER.—Hand-Book of the Locomotive:
Including the Construction of Engines and Boilers, and the Construction, Management, and Running of Locomotives. By STEPHEN ROPER. Eleventh edition. 18mo., tucks, gilt edge $2.50

ROPER.—Hand-Book of Modern Steam Fire-Engines:
With illustrations. By STEPHEN ROPER, Engineer. Fourth edition, 12mo., tucks, gilt edge. $3.50

ROPER.—Instructions and Suggestions for Engineers and Firemen:
By STEPHEN ROPER, Engineer. 18mo., Morocco. $2.00

ROPER.—Questions and Answers for Stationary and Marine Engineers and Electricians:
With a Chapter of What to Do in Case of Accidents. By STEPHEN ROPER, Engineer. Sixth edition, Rewritten and Greatly Enlarged by EDWIN R. KELLER, M. E., and Clayton W. PIKE, B. A. 306 pp. Morocco, pocketbook form, gilt edges $2.00

ROPER.—The Steam Boiler: Its Care and Management:
BY STEPHEN ROPER, Engineer. 12mo., tuck, gilt edges. $2.00

ROPER.—Use and Abuse of the Steam Boiler:
By STEPHEN ROPER, Engineer. Ninth Edition, with illustrations. 18mo., tucks, gilt edge $2.00

ROPER.—The Young Engineer's Own Book:
Containing an Explanation of the Principle and Theories on which the Steam Engine as a Prime Mover is based. By STEPHEN ROPER, Engineer. 160 Illustrations, 363 pages. 18mo., tuck $2.50

ROSE.—The Complete Practical Machinist:
Embracing Lathe Work, Vise Work, Drills and Drilling, Taps and Dies, Hardening and Tempering, the Making and Use of Tools, Tool Grinding, Marking out work, Machine Tools, etc. By JOSHUA ROSE. 395 Engravings. Nineteenth Edition, greatly Enlarged with New and Valuable Matter. 12mo., 504 pages $2.50

ROSE.—Mechanical Drawing Self-Taught:
Comprising Instructions in the Selection and Preparation of Drawing Instruments, Elementary Instruction in practical Mechanical Drawing, together with Examples in Simple Geometry and Elementary Mechanism, including Screw Threads, Gear Wheels, Mechanical Motions, Engines and Boilers. By JOSHUA ROSE, M. E. Illustrated by 330 engravings. 8vo. 313 pages $3.50

ROSE.—The Slide-Valve Practically Explained:
Embracing simple and complete Practical Demonstrations of the operation of each element in a Slide-valve Movement, and illustrating the effects of Variations in their Proportions by examples carefully selected from the most recent and successful practice. By JOSHUA ROSE, M. E. Illustrated by 35 engravings $1.00

ROSE.—Steam Boilers:
A Practical Treatise on Boiler Construction and Examination, for the Use of Practical Boiler Makers, Boiler Users, and Inspectors; and embracing in plain figures all the calculations necessary in Designing or Classifying Steam Boilers. By JOSHUA ROSE, M. E. Illustrated by 73 engravings. 250 pages. 8vo. $2.00

ROSS.—The Blowpipe in Chemistry, Mineralogy and Geology:
Containing all Known Methods of Anhydrous Analysis, many Working Examples, and Instructions for Making Apparatus. By LIEUT. COLONEL W. A. ROSS, R. A., F. G. S. With 120 Illustrations. 12mo. $2.00

SCHRIBER.—The Complete Carriage and Wagon Painter:
A Concise Compendiun of the Art of Painting Carriages, Wagons, and Sleighs, embracing Full Directions in all the Various Branches, including Lettering, Scrolling, Ornamenting, Striping, Varnishing, and Coloring, with numerous Recipes for Mixing Colors. 73 illustrations. 177 pp. 12mo... $1.00

SHAW.—Civil Architecture:
Being a Complete Theoretical and Practical System of Building, containing the Fundamental Principles of the Art. By EDWARD SHAW, Architect. To which is added a Treatise on

Gothic Architecture, etc. By THOMAS W. SILLOWAY and GEORGE M. HARDING, Architects. The whole illustrated by 102 quarto plates finely engraved on copper. Eleventh edition. 4to $5.00

SHERRATT.—The Elements of Hand-Railing:

Simplified and Explained in Concise Problems that are Easily Understood. The whole illustrated with Thirty-eight Accurate and Original Plates, Founded on Geometrical Principles, and showing how to Make Rail Without Centre Joints, Making Better Rail of the Same Material, with Half the Labor, and Showing How to Lay Out Stairs of all Kinds. By R. J. SHERRATT. Folio $2.50

SHUNK.—A Practical Treatise on Railway Curves and Location, for Young Engineers:

By W. F. SHUNK, C. E. 12mo. Full bound pocket-book form $2.00

SLOANE.—Home Experiments in Science:

By T. O'CONOR SLOANE, E. M., A. M., Ph.D. Illustrated by 91 engravings. 12mo. $1.00

SLOAN.—Homestead Architecture:

Containing Forty Designs for Villas, Cottages, and Farmhouses, with Essays on Style, Construction, Landscape Gardening, Furniture, etc., etc. Illustrated by upwards of 200 engravings. By SAMUEL SLOAN, Architect. 8vo. $2.00

SMITH.—The Dyer's Instructor:

Comprising Practical Instructions in the Art of Dyeing Silk, Cotton, Wool, and Worsted, and Woolen Goods; containing nearly 800 Receipts. To which is added a Treatise on the Art of Padding; and the Printing of Silk Warps, Skeins, and Handkerchiefs, and the various Mordants and Colors for the different styles of such work. By DAVID SMITH, Pattern Dyer. 12mo. $1.00

SMITH.—A Manual of Political Economy:

By E. PESHINE SMITH. A New Edition, to which is added a full Index. 12mo. $1.25

SMITH.—Parks and Pleasure-Grounds:

Or Practical Notes on Country Residences, Villas, Public Parks, and Gardens. By CHARLES H. J. SMITH, Landscape Gardener and Garden Architect, etc., etc. 12mo. $2.00

SNIVELY.—The Elements of Systematic Qualitative Chemical Analysis:

A Hand-book for Beginners. By JOHN H. SNIVELY, Phr. D. 16mo. $2.00

STOKES.—The Cabinet Maker and Upholsterer's Companion:
Comprising the Art of Drawing, as applicable to Cabinet Work; Veneering, Inlaying, and Buhl-Work; the Art of Dyeing and Staining Wood, Ivory, Bone, Tortoise-Shell, etc. Directions for Lacquering, Japanning, and Varnishing; to make French Polish, Glues, Cements, and Compositions; with numerous Receipts, useful to workmen generally. By J. STOKES. Illustrated. A New Edition, with an Appendix upon French Polishing, Staining, Imitating, Varnishing, etc., etc. 12mo. $1.25

STRENGTH AND OTHER PROPERTIES OF METALS:
Reports of Experiments on the Strength and other Properties of Metals for Cannon. With a Description of the Machines for Testing Metals, and of the Classification of Cannon in service. By Officers of the Ordnance Department, U. S. Army. By authority of the Secretary of War. Illustrated by 25 large steel plates. Quarto. $3.00

SULZ.—A Treatise on Beverages:
Or the Complete Practical Bottler. Full Instructions for Laboratory Work with Original Practical Recipes for all kinds of Carbonated Drinks, Mineral Waters, Flavoring Extracts, Syrups, etc. By CHARLES HERMAN SULZ, Technical Chemist and Practical Bottler. Illustrated by 428 Engravings. 818 pp. 8vo. $7.50

SYME.—Outlines of an Industrial Science:
By DAVID SYME. 12mo. $2.00

TABLES SHOWING THE WEIGHT OF ROUND, SQUARE AND FLAT BAR IRON, STEEL, ETC.
By Measurement. Cloth. ..... .63

TEMPLETON.—The Practical Examinator on Steam and the Steam-Engine.
With Instructive References relative thereto, arranged for the Use of Engineers, Students, and others. By WILLIAM TEMPLETON, Engineer. 12mo. $1.00

THALLNER.—Tool-Steel:
A Concise Hand-book on Tool-Steel in General. Its Treatment in the Operations of Forging, Annealing, Hardening, Tempering, etc., and the Appliances Therefor. By OTTO THALLNER, Manager in Chief of the Tool-Steel Works, Bismarckhütte, Germany. From the German by WILLIAM T. BRANNT. Illustrated by 69 engravings. 194 pages. 8vo. 1902. ..... $2.00

THAUSING.—The Theory and Practice of the Preparation of Malt and the Fabrication of Beer:
With especial reference to the Vienna Process of Brewing.

Elaborated from personal experience by JULIUS E. THAUSING, Professor at the School for Brewers, and at the Agricultural Institute, Mödling, near Vienna. Translated from the German by WILLIAM T. BRANNT. Thoroughly and elaborately edited, with much American matter, and according to the latest and most Scientific Practice, by A. SCHWARZ and DR. A. H. BAUER. Illustrated by 140 Engravings. 8vo. 815 pages. $10.00

TOMPKINS.—Cotton and Cotton Oil:
Cotton: Planting, Cultivating, Harvesting and Preparation for Market. Cotton Seed Oil Mills: Organization, Construction and Operation. Cattle Feeding: Production of Beef and Dairy Products, Cotton Seed Meal and Hulls as Stock Feed. Fertilizers: Manufacture, Manipulation and Uses. By D. A. TOMPKINS. 8vo. 494 pp. Illustrated $7.50

TOMPKINS.—Cotton Mill, Commercial Features:
A Text-Book for the Use of Textile Schools and Investors. With Tables showing Cost of Machinery and Equipments for Mills making Cotton Yarns and Plain Cotton Cloths. By D. A. TOMPKINS. 8vo. 240 pp. Illustrated .....$5.00.

TOMPKINS.—Cotton Mill Processes and Calculations:
An Elementary Text-Book for the Use of Textile Schools and for Home Study. By D. A. TOMPKINS. 312 pp. 8vo. Illustrated $5.00

TURNER'S (THE) COMPANION:
Containing Instructions in Concentric, Elliptic, and Eccentric Turning; also various Plates of Chucks, Tools, and Instruments; and Directions for using the Eccentric Cutter, Drill, Vertical Cutter, and Circular Rest; with Patterns and Instructions for working them. 12mo. $1.00

VAN CLEVE.—The English and American Mechanic:
Comprising a Collection of Over Three Thousand Receipts, Rules, and Tables, designed for the Use of every Mechanic and Manufacturer. By B. FRANK VAN CLEVE. Illustrated. 500 pp. 12mo. $2.00

VAN DER BURG.—School of Painting for the Imitation of Woods and Marbles:
A Complete, Practical Treatise on the Art and Craft of Graining and Marbling with the Tools and Appliances. 36 plates. Folio, 12x20 inches .....$6.00.

VILLE.—The School of Chemical Manures:
Or, Elementary Principles in the Use of Fertilizing Agents. From the French of M. GEO. VILLE, by A. A. FESQUET, Chemist and Engineer. With Illustrations. 12mo. ...$1.25

VOGDES.—The Architect's and Builder's Pocket-Companion and Price-Book:

Consisting of a Short but Comprehensive Epitome of Decimals, Duodecimals, Geometry and Mensuration; with Tables of United States Measures, Sizes, Weights, Strengths, etc., of Iron, Wood, Stone, Brick, Cement and Concretes, Quantities of Materials in given Sizes and Dimensions of Wood, Brick and Stone; and full and complete Bills of Prices for Carpenter's Work and Painting; also, Rules for Computing and Valuing Brick and Brick Work, Stone Work, Painting, Plastering, with a Vocabulary of Technical Terms, etc. By FRANK W. VOGDES, Architect, Indianapolis, Ind. Enlarged, revised, and corrected. In one volume, 368 pages, full-bound, pocketbook form, gilt edges. $2.00
Cloth $1.50

WAHNSCHAFFE.—A Guide to the Scientific Examination of Soils:

Comprising Select Methods of Mechanical and Chemical Analysis and Physical Investigation. Translated from the German of Dr. F. WAHNSCHAFFE. With additions by WILLIAM T. BRANNT. Illustrated by 25 engravings. 12mo. 177 pages. $1.50

WARE.—The Sugar Beet:

Including a History of the Beet Sugar Industry in Europe, Varieties of the Sugar Beet, Examination, Soils, Tillage, Seeds and Sowing, Yield and Cost of Cultivation, Harvesting, Transportation, Conservation, Feeding Qualities of the Beet and of the Pulp, etc. By LEWIS S. WARE, C. E., M. E. Illustrated by ninety engravings. 8vo. $2.00

WARN.—The Sheet-Metal Worker's Instructor:

For Zinc, Sheet-Iron, Copper, and Tin-Plate Workers, etc. Containing a selection of Geometrical Problems; also, Practical and Simple Rules for Describing the various Patterns required in the different branches of the above Trades. By REUBEN H. WARN, Practical Tin-Plate Worker. To which is added an Appendix, containing Instructions for Boiler-Making, Mensuration of Surfaces and Solids, Rules for Calculating the Weights of different Figures of Iron and Steel, Tables of the Weights of Iron, Steel, etc. Illustrated by thirty-two Plates and thirty-seven Wood Engravings. 8vo. $2.00

WARNER.—New Theorems, Tables, and Diagrams, for the Computation of Earth-work:

Designed for the use of Engineers in Preliminary and Final Estimates, of Students in Engineering and of Contractors and other non-professional Computers. In two parts, with an Appendix. Part I. A Practical Treatise; Part II. A

Theoretical Treatise, and the Appendix Containing Notes to the Rules and Examples of Part I.; Explanations of the Construction of Scales, Tables, and Diagrams, and a Treatise upon Equivalent Square Bases and Equivalent Level Heights. By JOHN WARNER, A. M., Mining and Mechanical Engineer. Illustrated by 14 Plates. 8vo. $3.00

WATSON.—A Manual of the Hand-Lathe:
Comprising Concise Directions for Working Metals of all kinds, Ivory, Bone, and Precious Woods; Dyeing, Coloring, and French Polishing; Inlaying by Veneers, and various methods practised to produce Elaborate work with dispatch, and at Small Expense. By EGBERT P. WATSON, Author of "The Modern Practice of American Machinists and Engineers." Illustrated by 78 engravings. $1.00

WATSON.—The Modern Practice of American Machinists and Engineers:
Including the Construction, Application, and Use of Drills, Lathe Tools, Cutters for Boring Cylinders, and Hollow-work generally, with the most economical Speed for the same; the Results verified by Actual Practice at the Lathe, the Vise, and on the floor. Together with Workshop Management, Economy of Manufacture, the Steam Engine, Boilers, Gears, Belting, etc., etc. By EGBERT P. WATSON. Illustrated by eighty-six engravings. 12mo. $2.00

WEATHERLY.—Treatise on the Art of Boiling Sugar, Crystallizing, Lozenge-making, Comfits, Gum Goods:
And other processes for Confectionery, including Methods for Manufacturing every Description of Raw and Refined Sugar Goods. A New and Enlarged Edition, with an Appendix on Cocoa, Chocolate, Chocolate Confections, etc. 196 pages. 12mo. (1903.) $1.50

WILL.—Tables of Qualitative Chemical Analysis:
With an Introductory Chapter on the Course of Analysis. By Professor HEINRICH WILL, of Giessen, Germany. Third American, from the eleventh German edition. Edited by CHARLES F. HIMES, Ph. D., Professor of Natural Science, Dickinson College, Carlisle, Pa. 8vo. $1.00

WILLIAMS.—On Heat and Steam:
Embracing New Views of Vaporization, Condensation and Explosion. By CHARLES WYE WILLIAMS, A. I. C. E. Illustrated. 8vo. $2.00

WILSON.—The Practical Tool-Maker and Designer:
A Treatise upon the Designing of Tools and Fixtures for Machine Tools and Metal Working Machinery, Comprising Modern Examples of Machines with Fundamental Designs

for Tools for the Actual Production of the work; Together with Special Reference to a Set of Tools for Machining the Various Parts of a Bicycle. Illustrated by 189 engravings (1898.) $2.50

CONTENTS: Introductory. Chapter I. Modern Tool Room and Equipment. II. Files, Their Use and Abuse. III. Steel and Tempering. IV. Making Jigs. V. Milling Machine Fixtures. VI. Tools and Fixtures for Screw Machines. VII. Broaching. VIII. Punches and Dies for Cutting and Drop Press. IX. Tools for Hollow-Ware. X. Embossing: Metal. Coin, and Stamped Sheet-Metal Ornaments. XI. Drop Forging. XII. Solid Drawn Shells or Ferrules; Cupping or Cutting, and Drawing; Breaking Down Shells. XIII. Annealing, Pickling, and Cleaning. XIV. Tools for Draw Bench. XV. Cutting and Assembling Pieces by Means of Ratchet Dial Plates at One Operation. XVI. The Header. XVII. Tools for Fox Lathe. XVIII. Suggestions for a set of Tools for Machining the Various Parts of a Bicycle. XIX. The Plater's Dynamo. XX. Conclusion—With a Few Random Ideas. Appendix. Index.

BRANNT'S "SOAP MAKER'S HAND BOOK."

The most helpful and up-to-date book on the Art of Soap Making in the English language.

In one volume, 8vo, 535 pages, illustrated by 54 engravings. Price $6.00 net, Free of Postage to any Address in the World, or by Express C. O. D. freight paid to any Address in the United States or Canada.

PUBLISHED APRIL, 1912.

THE SOAP MAKER'S HAND BOOK

OF

MATERIALS, PROCESSES AND RECEIPTS FOR EVERY DESCRIPTION OF SOAP

INCLUDING

FATS, FAT OILS, AND FATTY ACIDS; EXAMINATION OF FATS AND OILS; ALKALIES; TESTING SODA AND POTASH; MACHINES AND UTENSILS; HARD SOAPS; SOFT SOAPS; TEXTILE SOAPS; WASHING POWDERS AND ALLIED PRODUCTS; TOILET SOAPS, MEDICATED SOAPS, AND SOAP SPECIALTIES; ESSENTIAL OILS AND OTHER PERFUMING MATERIALS; TESTING SOAPS.

EDITED CHIEFLY FROM THE GERMAN OF

DR. C. DEITE, A. ENGELHARDT, F. WILTNER,

AND NUMEROUS OTHER EXPERTS.

WITH ADDITIONS

BY

WILLIAM T. BRANNT,

EDITOR OF "THE TECHNO CHEMICAL RECEIPT BOOK."

ILLUSTRATED BY FIFTY-FOUR ENGRAVINGS.

SECOND EDITION, REVISED AND IN GREAT PART RE-WRITTEN.

PHILADELPHIA:

HENRY CAREY BAIRD & CO.,

INDUSTRIAL PUBLISHERS, BOOKSELLERS AND IMPORTERS,

810 WALNUT STREET.

1911

KIRK'S CUPOLA FURNACE.

An Eminently, Practical, Up-to-Date Book, by an Expert. Third Thoroughly Revised and Partly Re-written Edition. In one volume, 8vo., 482 pages, illustrated by one hundred and six engravings. Price $3.50. Free of Postage to any Address in the World, or by Express C. O. D., freight paid to any Address in the United States or Canada.

PUBLISHED AUGUST, 1910.

THE CUPOLA FURNACE

A PRACTICAL TREATISE ON THE

CONSTRUCTION AND MANAGEMENT

OF

FOUNDRY CUPOLAS:

COMPRISING

IMPROVEMENTS IN CUPOLAS AND METHODS OF THEIR CONSTRUCTION AND MANAGEMENT; TUYERES; MODERN CUPOLAS; CUPOLA FUELS; FLUXING OF IRON; GETTING UP CUPOLA STOCK; RUNNING A CONTINUOUS STREAM; SCIENTIFICALLY DESIGNED CUPOLAS; SPARK-CATCHING DEVICES; BLAST-PIPES AND BLAST; BLOWERS; FOUNDRY TRAM RAIL, ETC., ETC.

BY

EDWARD KIRK,

PRACTICAL MOULDER AND MELTER, CONSULTING EXPERT IN MELTING.

Author of "The Founding of Metals," and of Numerous Papers on Cupola Practice.

ILLUSTRATED BY ONE HUNDRED AND SIX ENGRAVINGS.

THIRD THOROUGHLY REVISED AND PARTLY RE-WRITTEN EDITION.

PHILADELPHIA:

HENRY CAREY BAIRD & CO.,

INDUSTRIAL PUBLISHERS, BOOKSELLERS AND IMPORTERS,

810 WALNUT STREET.

KIRK'S FOUNDRY IRONS.

A Practical, Up-to-Date Book, by the well known Expert. In one volume, 8vo, 294 pages, illustrated. Price $3.00 net. Free of Postage to any Address in the World, or by Express C. O. D., freight paid to any Address in the United States or Canada.

PUBLISHED JUNE, 1911.

A PRACTICAL TREATISE

ON

FOUNDRY IRONS:

COMPRISING

PIG IRON, AND FRACTURE GRADING OF PIG AND SCRAP IRONS; SCRAP IRONS; MIXING IRONS; ELEMENTS AND METALLOIDS; GRADING IRON BY ANALYSIS; CHEMICAL STANDARDS FOR IRON CASTINGS; TESTING CAST IRON; SEMI-STEEL; MALLEABLE IRON; ETC., ETC.

BY

EDWARD KIRK,

PRACTICAL MOULDER AND MELTER; CONSULTING EXPERT IN MELTING. AUTHOR OF "THE CUPOLA FURNACE," AND OF NUMEROUS PAPERS ON CUPOLA PRACTICE.

ILLUSTRATED

PHILADELPHIA:
HENRY CAREY BAIRD & CO.,
INDUSTRIAL PUBLISHERS, BOOKSELLERS AND IMPORTERS,
810 WALNUT STREET.
1911

BRANNT'S DRY CLEANER.

The only book including Hat Cleaning and Renovating in any language, in one volume, 12mo, 371 pages, illustrated. Price $2.50 net. Free of postage to any address in the world, or by express freight paid to any address in the United States or Canada.

PUBLISHED OCTOBER, 1911.

THE PRACTICAL DRY CLEANER, SCOURER, AND GARMENT DYER:

COMPRISING

DRY, CHEMICAL, OR FRENCH CLEANING; PURIFICATION OF BENZINE; REMOVAL OF STAINS, OR SPOTTING; WET CLEANING; FINISHING CLEANED FABRICS; CLEANING AND DYEING FURS, SKIN RUGS AND MATS; CLEANING AND DYEING FEATHERS; CLEANING AND RENOVATING FELT, STRAW AND PANAMA HATS; BLEACHING AND DYEING STRAW AND STRAW HATS; CLEANING AND DYEING GLOVES; GARMENT DYEING; STRIPPING; ANALYSIS OF TEXTILE FABRICS.

EDITED BY

WILLIAM T. BRANNT,

EDITOR OF "THE TECHNO-CHEMICAL RECEIPT BOOK."

FOURTH EDITION, REVISED AND ENLARGED.

ILLUSTRATED BY FORTY-ONE ENGRAVINGS.

PHILADELPHIA:

HENRY CAREY BAIRD & CO.,

INDUSTRIAL PUBLISHERS, BOOKSELLERS AND IMPORTERS,

810 WALNUT STREET.

1911.